CITY OF LAKE FOREST

Village Pond Park Improvement Project

October 2016

Prepared By:
NUVIS Landscape Architecture & Planning

Under the Supervision Of:
CITY OF LAKE FOREST
Public Works Department
25550 Commercentre Drive, Suite 100
Lake Forest, CA 92630

REVISED PER ADDENDA No. 1

CITY OF LAKE FOREST

Village Pond Park Improvement Project

October 2016

Prepared By:
NUVIS Landscape Architecture & Planning

Perry Cardoza
Registered Landscape Architect #3943

Under the Supervision Of:
CITY OF LAKE FOREST
Public Works Department
25550 Commercentre Drive, Suite 100
Lake Forest, CA 92630

Approved By: _____
Thomas E. Wheeler, P.E.
Director of Public Works/City Engineer

REVISED PER ADDENDA No. 1

SECTION 00010
TABLE OF CONTENTS

Page

SECTION 00010 TABLE OF CONTENTS I
SECTION 00100 NOTICE INVITING BIDS 1
SECTION 00200 INSTRUCTIONS TO BIDDERS 3
SECTION 00400 BID FORM 11
SECTION 00405 CONTRACTOR'S CERTIFICATE REGARDING WORKERS' COMPENSATION 17
SECTION 00410 BID BOND 18
SECTION 00420 NONCOLLUSION DECLARATION 20
SECTION 00430 CONTRACTOR INFORMATION AND EXPERIENCE FORM 21
SECTION 00440 LIST OF SUBCONTRACTORS FORM 28
SECTION 00450 IRAN CONTRACTING ACT CERTIFICATION 30
SECTION 00460 PUBLIC WORKS CONTRACTOR REGISTRATION CERTIFICATION 31
SECTION 00500 CONTRACT 32
SECTION 00610 PERFORMANCE BOND 35
SECTION 00620 PAYMENT BOND 39
SECTION 00700 GENERAL CONDITIONS 43
SECTION 00750 SPECIAL CONDITIONS 86
SECTION 00800 TECHNICAL SPECIFICATIONS.....138

Division 01
Section 01 56 39 – Temporary Tree and Plant Protection.....138
Division 03
Section 03 30 00 – Cast-In-Place Concrete.....147
Division 04
Section 04 20 00 – Unit Masonry.....160
Division 13
Section 13 10 00 – Lake Specification.....176
Division 26
Section 26 05 19 – Low-Voltage Electrical Power Conductors.....203
Section 26 05 26 – Grounding and Bonding for Electrical Systems.....208
Section 26 05 53 – Identification for Electrical Systems.....214
Section 26 09 23 – Lighting Control Devices.....222
Section 26 09 43.23 – Relay-Based Lighting Controls.....226

Division 26 (Continued)
Section 26 24 16 – Panelboards……..233
Section 26 27 13 – Electricity Metering……..242
Section 26 27 26 – Wiring Devices..…….……....241
Section 26 56 13 – Lighting Poles and Standards……247
Section 26 56 19 – LED Exterior Lighting…….....257

Division 31
Section 31 10 00 – Site Clearing……..……265
Section 31 20 00 – Earth Moving…….....269

Division 32
Section 32 13 13 – Concrete Paving……...279
Section 32 84 00 – Planting Irrigation ……....287
Section 32 91 13 – Soil Preparation……305
Section 32 92 00 – Turf and Grasses……..313
Section 32 93 00 – Plants ……318
Section 32 93 10 – Non Vegetative Site Materials……328
Section 32 93 20 – Site Furniture and Amenities……..331

APPENDIX A – STRUCTURAL CALCULATIONS
APPENDIX B – FLOATING ISLAND 350 SF
APPENDIX C – FLOATING ISLAND PLANT LIST
APPENDIX D – FLOATING ISLAND HANDOUT
APPENDIX E – BRIDGE ABUTMENT CALCULATIONS
APPENDIX F – BRIDGE ABUTMENT DETAIL
APPENDIX G – OUTDOOR LIGHTING COMPLIANCE
APPENDIX H – OUTDOOR LIGHTING CONTROLS
APPENDIX I – OUTDOOR LIGHTING POWER
APPENDIX J – GEOTECHNICAL REPORT (INFORMATIONAL ONLY)
APPENDIX K – INSURANCE REQUIREMENTS

SECTION 00100
NOTICE INVITING BIDS

The City of Lake Forest ("City") will receive sealed bids for the Village Pond Park Improvement Project at the office of the City Clerk, 25550 Commercentre Drive, Suite 100, Lake Forest, CA 92630, no later than **2:00 p.m. on November 29, 2016**, at which time or thereafter said bids will be opened and read aloud. Bids received after this time will be returned unopened. Bids shall be valid for 90 calendar days after the bid opening date.

Bids must be submitted on City's Bid Forms. Bidders may view and/or obtain a copy of the Plans and Specifications directly from SABP Reprographics by calling 949-756-1001 or by accessing their website at www.sabp.com and clicking on PlanWell. Upon payment of the purchase price, the Contract Documents become the property of the purchaser and may not be returned for a refund. Contract documents for the project will not be available for sale at City Hall. To the extent required by Section 20103.7 of the Public Contract Code, upon request from a contractor plan room service, the City shall provide an electronic copy of the Contract Documents to the contractor plan room at no charge.

A **"MANDATORY"** Pre-Bid Conference will be held at Village Pond Park on the following date(s) and time(s): **November 1, 2016 at 10:00 a.m**. Each and every Bidder **"MUST"** attend the Pre-Bid Conference. Prospective bidders **"MAY"** visit the Project Site without making arrangements through the City of Lake Forest, Public Works Department, however attendance at the mandatory pre bid conference will be required by all bidders. Bids **"WILL NOT"** be accepted from any bidder who did not attend the Mandatory Pre-Bid Conference.

Bids must be accompanied by cash, a certified or cashier's check, or a Bid Bond in favor of the City in an amount not less than ten percent (10%) of the submitted Total Bid Price. Each bid shall also be accompanied by the Noncollusion Declaration, the List of Subcontractors Form, the Iran Contracting Act Certification and all additional documentation required by the Instructions to Bidders.

The successful bidder will be required to furnish City with a Performance Bond equal to 100% of the successful bid, and a Payment Bond equal to 100% of the successful bid, prior to execution of the Contract. All bonds are to be secured from a surety that meets all of the State of California bonding requirements, as defined in Code of Civil Procedure Section 995.120, and is admitted by the State of California.

Pursuant to Public Contract Code Section 22300, the successful bidder may substitute certain securities for funds withheld by City to ensure his performance under the Contract.

The Director of Industrial Relations has determined the general prevailing rate of per diem wages in the locality in which this work is to be performed for each craft or type of worker needed to execute the Contract which will be awarded to the successful bidder,

copies of which are on file and will be made available to any interested party upon request at Lake Forest Public Works Department or online at http://www.dir.ca.gov/dlsr. A copy of these rates shall be posted by the successful bidder at the job site. The successful bidder and all subcontractor(s) under him, shall comply with all applicable Labor Code provisions, which include, but are not limited to the payment of not less than the required prevailing rates to all workers employed by them in the execution of the Contract, the employment of apprentices, the hours of labor and the debarment of contractors and subcontractors.

If the bids subject to this Notice are due on or after March 1, 2015, then pursuant to Labor Code sections 1725.5 and 1771.1, all contractors and subcontractors that wish to bid on, be listed in a bid proposal, or enter into a contract to perform public work must be registered with the Department of Industrial Relations. No bid will be accepted nor any contract entered into without proof of the contractor's and subcontractors' current registration with the Department of Industrial Relations to perform public work. If awarded a Contract, the Bidder and its subcontractors, of any tier, shall maintain active registration with the Department of Industrial Relations for the duration of the Project.

This Project is subject to compliance monitoring and enforcement by the Department of Industrial Relations. In bidding on this project, it shall be the Bidder's sole responsibility to evaluate and include the cost of complying with all labor compliance requirements under this contract and applicable law in its bid.

Each bidder shall be a licensed contractor pursuant to the Business and Professions Code and shall be licensed in the following appropriate classification(s) of contractor's license(s), for the work bid upon, and must maintain the license(s) throughout the duration of the Contract: Class A. In addition, the successful bidder will be required to self-perform at least 50% of the work.

Award of Contract: City shall award the Contract for the Project to the lowest responsible bidder as determined from the base bid alone. City reserves the right to reject any or all bids or to waive any irregularities or informalities in any bids or in the bidding process.

For further information, contact Douglas A. Erdman, Principal Civil Engineer at (949) 282-5233 or by e-mail at derdman@lakeforestca.gov.

Publish Date: October 14, 2016
October 21, 2016

END OF NOTICE INVITING BIDS

SECTION 00200
INSTRUCTIONS TO BIDDERS

1. AVAILABILITY OF CONTRACT DOCUMENTS

Bids must be submitted to City on the Bid Forms which are a part of the Bid Package for the Project. Contract Documents may be obtained at the location(s) and at the time(s) indicated in the Notice Inviting Bids. Any applicable charges for the Contract Documents are outlined in the Notice Inviting Bids.

City may also make the Contract Documents available for review at one or more plan rooms, as indicated in the Notice Inviting Bids. Please Note: Prospective bidders who choose to review the Contract Documents at a plan room must contact City to obtain the required Contract Documents if they decide to submit a bid for the Project.

2. EXAMINATION OF CONTRACT DOCUMENTS

City has made copies of the Contract Documents available, as indicated above. Bidders shall be solely responsible for examining the Project Site and the Contract Documents, including any Addenda issued during the bidding period, and for informing itself with respect to local labor availability, means of transportation, necessity for security, laws and codes, local permit requirements, wage scales, local tax structure, contractors' licensing requirements, availability of required insurance, and other factors that could affect the Work. Bidders are responsible for consulting the standards referenced in the Contract. Failure of Bidder to so examine and inform itself shall be at its sole risk, and no relief for error or omission will be given except as required under State law.

3. INTERPRETATION OF CONTRACT DOCUMENTS

Discrepancies in, and/or omissions from the Plans, Specifications or other Contract Documents or questions as to their meaning shall be immediately brought to the attention of City by submission of a written request for an interpretation or correction to City. Such submission, if any, must be sent to the Douglas A. Erdman, Principal Civil Engineer by faxing (949) 461-3511 or emailing to derdman@lakeforestca.gov.

Any interpretation of the Contract Documents will be made only by written addenda duly issued and mailed or delivered to each person or firm who has purchased a set of Contract Documents. City will not be responsible for any explanations or interpretations provided in any other manner. No person is authorized to make any oral interpretation of any provision in the Contract Documents to any bidder, and no bidder should rely on any such oral interpretation.

Bids shall include complete compensation for all items that are noted in the Contract Documents as the responsibility of the Contractor.

4. INSPECTION OF SITE; PRE-BID CONFERENCE AND SITE WALK

Each prospective bidder is responsible for fully acquainting itself with the conditions of the Project Site (which may include more than one site), as well as those relating to the construction and labor of the Project, to fully understand the facilities, difficulties and restrictions which may impact the cost or effort required to complete the Project. To this end, a Pre-Bid Conference and Site Walk will be held on the date(s) and time(s) indicated in the Notice Inviting Bids. Storm, surface, nuisance, or other waters may be encountered at various times during construction of the Project. Federal and State laws require the City and its contractors to appropriately manage such waters pursuant to the requirements of California State Water Resources Control Board Order Number 2009-0009-DWQ and any amendment or renewal thereof, the Federal Clean Water Act, and the California Porter Cologne Water Quality Control Act. By submitting a Bid, each bidder acknowledges that it has investigated the risk arising from such waters, has prepared its Bid accordingly, and assumes any and all risks and liabilities arising therefrom.

5. ADDENDA

City reserves the right to revise the Contract Documents prior to the bid opening date. Revisions, if any, shall be made by written Addenda. All Addenda issued by City shall be included in the bid and made part of the Contract Documents. Pursuant to Public Contract Code Section 4104.5, if City issues an Addendum which includes material changes to the Project less than 72 hours prior to the deadline for submission of bids, City will extend the deadline for submission of bids. City may determine, in its sole discretion, whether an Addendum warrants postponement of the bid submission date. Each prospective bidder shall provide City a name, address and facsimile number to which Addenda may be sent, as well as a telephone number by which City can contact the bidder. Copies of Addenda will be furnished by facsimile, first class mail, express mail or other proper means of delivery without charge to all parties who have obtained a copy of the Contract Documents and provided such current information. Please Note: Bidders are responsible for ensuring that they have received any and all Addenda. To this end, each bidder should contact the Public Works to verify that he has received all Addenda issued, if any, prior to the bid opening.

6. ALTERNATE BIDS

If alternate bid items are called for in the Contract Documents, the lowest bid will be determined on the basis of the base bid only. However, City may choose to award the contract on the basis of the base bid alone or the base bid and any alternate or combination of alternates.The time required for completion of the alternate bid items has been factored into the Contract duration and no additional Contract time will be awarded for any of the alternate bid items. City may elect to include one or more of the alternate bid items, or to otherwise remove certain work from the Project scope of work, accordingly each Bidder must ensure that each bid item contains a proportionate share of profit, overhead and other costs or expenses which will be incurred by the Bidder.

7. COMPLETION OF BID FORMS

Bids shall only be prepared using copies of the Bid Forms which are included in the Contract Documents. The use of substitute bid forms other than clear and correct photocopies of those provided by City will not be permitted. Bids shall be executed by an authorized signatory as described in these Instructions to Bidders. In addition, Bidders shall fill in all blank spaces (including inserting "N/A" where applicable) and initial all interlineations, alterations, or erasures to the Bid Forms. Bidders shall neither delete, modify, nor supplement the printed matter on the Bid Forms nor make substitutions thereon. USE OF BLACK OR BLUE INK, INDELIBLE PENCIL OR A TYPEWRITER IS REQUIRED. Deviations in the bid form may result in the bid being deemed non-responsive.

8. MODIFICATIONS OF BIDS

Each Bidder shall submit its Bid in strict conformity with the requirements of the Contract Documents. Unauthorized additions, modifications, revisions, conditions, limitations, exclusions or provisions attached to a Bid may render it non-responsive and may cause its rejection. Bidders shall neither delete, modify, nor supplement the printed matter on the Bid Forms, nor make substitutions thereon. Oral, telephonic and electronic modifications will not be considered, unless the Notice Inviting Bids authorizes the submission of electronic bids and modifications thereto and such modifications are made in accordance with the Notice Inviting Bids.

9. DESIGNATION OF SUBCONTRACTORS

Pursuant to State law, the Bidders must designate the name, license number, and location of each subcontractor who will perform work or render services for the Bidder in an amount that exceeds one half of one percent (1/2%) of the Bidder's Total Bid Price, as well as the portion of work each such subcontractor will perform on the form provided herein by City. No additional time will be provided to bidders to submit any of the requested information in the Designation of Subcontractor form. The successful bidder will be required to self-perform at least 50% of the work.

10. LICENSING REQUIREMENTS

Pursuant to Section 7028.15 of the Business and Professions Code and Section 3300 of the Public Contract Code, all bidders must possess proper licenses for performance of this Contract. Subcontractors must possess the appropriate licenses for each specialty subcontracted. Pursuant to Section 7028.5 of the Business and Professions Code, City shall consider any bid submitted by a contractor not currently licensed in accordance with state law and pursuant to the requirements found in the Contract Documents to be non-responsive, and City shall reject the Bid. City shall have the right to request, and Bidders shall provide within five (5) calendar days, evidence satisfactory to City of all valid license(s) currently held by that Bidder and each of the Bidder's subcontractors, before awarding the Contract.

11. SIGNING OF BIDS

All Bids submitted shall be executed by the Bidder or its authorized representative. Bidders may be asked to provide evidence in the form of an authenticated resolution of its Board of Directors or a Power of Attorney evidencing the capacity of the person signing the Bid to bind the Bidder to each Bid and to any Contract arising therefrom.

If a Bidder is a joint venture or partnership, it may be asked to submit an authenticated Power of Attorney executed by each joint venturer or partner appointing and designating one of the joint venturers or partners as a management sponsor to execute the Bid on behalf of Bidder. Only that joint venturer or partner shall execute the Bid. The Power of Attorney shall also: (1) authorize that particular joint venturer or partner to act for and bind Bidder in all matters relating to the Bid; and (2) provide that each venturer or partner shall be jointly and severally liable for any and all of the duties and obligations of Bidder assumed under the Bid and under any Contract arising therefrom. The Bid shall be executed by the designated joint venturer or partner on behalf of the joint venture or partnership in its legal name.

12. BID GUARANTEE (BOND)

Each bid shall be accompanied by: (a) cash; (b) a certified check made payable to City; (c) a cashier's check made payable to City; or (d) a bid bond payable to City executed by the bidder as principal and surety as obligor in an amount not less than 10% of the maximum amount of the bid. Personal sureties and unregistered surety companies are unacceptable. The surety insurer shall be California admitted surety insurer, as defined in Code of Civil Procedure Section 995.120. The cash, check or bid bond shall be given as a guarantee that the bidder shall execute the Contract if it be awarded to the bidder, shall provide the payment and performance bonds and insurance certificates and endorsements as required herein within ten (10) calendar days after notification of the award of the Contract to the bidder. Failure to provide the required documents may result in forfeiture of the bidder's bid deposit or bond to City and City may award the Contract to the next lowest responsive, responsible bidder, or may call for new bids.

13. SUBMISSION OF SEALED BIDS

Once the Bid and supporting documents have been completed and signed as set forth herein, they shall be placed, along with the Bid Guarantee and other required materials in an envelope, sealed, addressed and delivered or mailed, postage prepaid to City at the place and to the attention of the person indicated in the Notice Inviting Bids. No oral or telephonic bids will be considered. No forms transmitted via the Internet, e-mail, facsimile, or any other electronic means will be considered unless specifically authorized by City as provided herein. The envelope shall also contain the following in the lower left-hand corner thereof:

Bid of (Bidder's Name)

for the ***Village Pond Park Improvement Project***

Only where expressly permitted in the Notice Inviting Bids, may Bidders submit their bids via electronic transmission pursuant to Public Contract Code Sections 1600 and 1601. City reserves the right to not accept electronically transmitted bids where not specifically authorized in the Notice Inviting Bids, and may reject any bid not strictly complying with City's designated methods for delivery.

14. DELIVERY AND OPENING OF BIDS

Bids will be received by City at the address shown in the Notice Inviting Bids up to the date and time shown therein. City will leave unopened any Bid received after the specified date and time, and any such unopened Bid will be returned to the Bidder. It is the Bidder's sole responsibility to ensure that its Bid is received as specified. Bids may be submitted earlier than the dates(s) and time(s) indicated.

Bids will be opened at the date and time stated in the Notice Inviting Bids, and the amount of each Bid will be read aloud and recorded. All Bidders may, if they desire, attend the opening of Bids. City may in its sole discretion, elect to postpone the opening of the submitted Bids. City reserves the right to reject any or all Bids and to waive any informality or irregularity in any Bid. In the event of a discrepancy between the written amount of the Bid Price and the numerical amount of the Bid Price, the written amount shall govern.

15. WITHDRAWAL OF BID

Prior to bid opening, a Bid may be withdrawn by the Bidder only by means of a written request signed by the Bidder or its properly authorized representative. Any request to withdraw a bid after bid opening shall meet all requirements of Public Contract Code section 5100 et seq. and must be submitted in writing within five (5) working days, excluding Saturdays, Sundays and State holidays, specifying in detail the mistake.

16. BASIS OF AWARD; BALANCED BIDS

City shall award the Contract to the lowest responsive, responsible Bidder submitting a responsive Bid. City may reject any Bid which, in its opinion when compared to other bids received or to City's internal estimates, does not accurately reflect the cost to perform the Work. City may reject as non-responsive any bid which unevenly weights or allocates costs, including but not limited to overhead and profit to one or more particular bid items.

17. DISQUALIFICATION OF BIDDERS; INTEREST IN MORE THAN ONE BID

No bidder shall be allowed to make, submit or be interested in more than one bid. However, a person, firm, corporation or other entity that has submitted a subproposal to a bidder, or that has quoted prices of materials to a bidder, is not thereby disqualified from submitting a subproposal or quoting prices to other bidders submitting a bid to City. No person, firm, corporation, or other entity may submit subproposal to a bidder, or

quote prices of materials to a bidder, when also submitting a prime bid on the same Project.

18. INSURANCE REQUIREMENTS

The successful bidder shall procure the insurance in the form and in the amount specified in the Contract Documents.

19. AWARD PROCESS

Once all Bids are opened and reviewed to determine the lowest responsive and responsible Bidder, City Council may award the contract. The apparent successful Bidder should begin to prepare the following documents: (1) the Performance Bond; (2) the Payment Bond; and (3) the required insurance certificates and endorsements. Once City notifies the Bidder of the award, the Bidder will have ten (10) consecutive calendar days from the date of this notification to execute the Contract and supply City with all of the required documents and certifications. Regardless whether the Bidder supplies the required documents and certifications in a timely manner, the Contract time will begin to run ten (10) calendar days from the date of the notification. Once City receives all of the properly drafted and executed documents and certifications from the Bidder, City shall issue a Notice to Proceed to that Bidder.

20. FILING OF BID PROTESTS

Bidders may file a “protest” of a Bid with City’s City’s Public Works Director/City Engineer. In order for a Bidder’s protest to be considered valid, the protest must:

A. Be filed in writing within five (5) calendar days after the bid opening date;

B. Clearly identify the specific irregularity or accusation;

C. Specify, in detail, the grounds of the protest and the facts supporting the protest; and

D. Include all relevant, supporting documentation with the protest at time of filing.

If the protest does not comply with each of these requirements, it may be rejected without further review.

If the protest is valid, City’s City’s Public Works Director/City Engineer, or other designated City staff member, shall review the basis of the protest and all relevant information. The City’s Public Works Director/City Engineer will provide a written decision to the protestor. The protestor may then appeal the decision of the Public Works Director/City Engineer to the City Manager.

The procedure and time limits set forth in this section are mandatory and are the sole and exclusive remedy in the event of a bid protest. Failure to comply with these procedures shall constitute a failure to exhaust administrative remedies and a waiver of any right to further pursue the bid protest,

21. WORKERS COMPENSATION

Each bidder shall submit the Contractor's Certificate Regarding Workers' Compensation form.

22. SUBSTITUTION OF SECURITY

The Contract Documents call for monthly progress payments based upon the percentage of the work completed. The City will retain five percent (5%) of each progress payment as provided by the Contract Documents. At the request and expense of the successful Bidder, the City will substitute securities for the amount so retained in accordance with Public Contract Code Section 22300.

23. PREVAILING WAGES

City has obtained from the Director of the Department of Industrial Relations the general prevailing rate of per diem wages in the locality in which this work is to be performed for each craft or type of worker needed to execute the Contract. These rates are on file and available at Department of Public Works or may be obtained online at http://www.dir.ca.gov/dlsr. Bidders are advised that a copy of these rates must be posted by the successful Bidder at the job site(s).

24. DEBARMENT OF CONTRACTORS AND SUBCONTRACTORS

In accordance with the provisions of the Labor Code, contractors or subcontractors may not perform work on a public works project with a subcontractor who is ineligible to perform work on a public project pursuant to Section 1777.1 or Section 1777.7 of the Labor Code. Any contract on a public works project entered into between a contractor and a debarred subcontractor is void as a matter of law. A debarred subcontractor may not receive any public money for performing work as a subcontractor on a public works contract. Any public money that is paid to a debarred subcontractor by the Contractor for the Project shall be returned to City. The Contractor shall be responsible for the payment of wages to workers of a debarred subcontractor who has been allowed to work on the Project.

25. IRAN CONTRACTING ACT CERTIFICATION

Each bidder shall submit the certification required by the Iran Contracting Act of 2010, Public Contract Code section 2200 et seq. as provided with the Bid Documents.

26. PUBLIC WORKS CONTRACTOR REGISTRATION CERTIFICATION

If the bids subject to this Notice are due on or after March 1, 2015, then pursuant to Labor Code sections 1725.5 and 1771.1, all contractors and subcontractors that wish to bid on, be listed in a bid proposal, or enter into a contract to perform public work must be registered with the Department of Industrial Relations. No bid will be accepted nor any contract entered into without proof of the contractor's and subcontractors' current registration with the Department of Industrial Relations to perform public work. If awarded a Contract, the Bidder and its subcontractors, of any tier, shall maintain active registration with the Department of Industrial Relations for the duration of the Project. To this end, Bidder shall sign and submit with its Bid the Public Works Contractor Registration Certification on the form provided, attesting to the facts contained therein. Failure to submit this form may render the Bid non-responsive. In addition, each Bidder shall provide the registration number for each listed subcontractor in the space provided in the Designation of Subcontractors Form.

27. PERFORMANCE BOND AND PAYMENT BOND REQUIREMENTS

Within the time specified in the Contract Documents, the Bidder to whom a Contract is awarded shall deliver to City four identical counterparts of the Performance Bond and Payment Bond in the form supplied by City and included in the Contract Documents. Failure to do so may, in the sole discretion of City, result in the forfeiture of the Bid Guarantee. The surety supplying the bond must be an admitted surety insurer, as defined in Code of Civil Procedure Section 995.120, authorized to do business as such in the State of California and satisfactory to City. The Performance Bond and the Payment Bond shall be for one hundred percent (100%) of the Total Bid Price.

28. REQUEST FOR SUBSTITUTIONS

The successful bidder shall comply with the substitution request procedures set forth in the Bid and Contract Documents. Any deadlines for substitution requests that occur prior to the bid opening date are set forth in the Special Conditions.

29. SALES AND OTHER APPLICABLE TAXES, PERMITS, LICENSES AND FEES

Contractor and its subcontractors performing work under this Contract will be required to pay California sales tax and other applicable taxes, and to pay for permits, licenses and fees required by the agencies with authority in the jurisdiction in which the work will be located, unless otherwise expressly provided by the Contract Documents.

30. EXECUTION OF CONTRACT

As required herein the Bidder to whom an award is made shall execute the Contract in the amount determined by the Contract Documents. City may require appropriate evidence that the persons executing the Contract are duly empowered to do so.

END OF INSTRUCTIONS TO BIDDERS

SECTION 00400
BID FORM

NAME OF BIDDER:_____

The undersigned, hereby declare that we have carefully examined the location of the proposed Work, and have read and examined the Contract Documents, including all plans, specifications, and all addenda, if any, for the following Project:

Village Pond Park Improvements

We hereby propose to furnish all labor, materials, equipment, tools, transportation, and services, and to discharge all duties and obligations necessary and required to perform and complete the Project for the following TOTAL BID PRICE:

NO.	ITEM DESCRIPTION	UNITS	EST. QTY.	UNIT PRICE	ITEM COST
PART A – Site Work					
1.	Mobilization/Demobilization (Not to Exceed 5% of Total Contract Price)	LS	1		
2.	Clearing and Grubbing with removal of concrete lake edge walkway and salvage of trees/plaques/bases marked to be relocated	LS	1		
3.	SWPPP /Stormwater Pollution Prevention & Erosion Control / BMPs	LS	1		
4.	Site grading/ earthwork (Est. 3,600 CY)	LS	1		
5	Export (Est. 280 CY)	LS	1		
PART B – Site Amenities					
6.	Concrete paving- walkway	SF	21,537		
7.	Concrete paving- enhanced	SF	6,015		
8.	Construct PCC Commercial Driveway Approach	EA	1		
9.	Concrete curb and gutter	LF	22		

10.	3" thick decomposed granite layer	SF	1,728		
11.	Concrete mowstrip	LF	1,334		
12.	Concrete banding	LF	1,092		
13.	Recycled plastic header board	LF	648		
14.	Overhead structure	EA	1		
15.	Rail fencing	LF	375		
16.	Lighting and electrical system	LS	1		
17.	Picnic table concrete paving	SF	2,045		
18.	Prefabricated bridge- 30' long incl. abutments	LS	1		
19.	Pedestrian bridge- incl. abutments with contractor paid for and provided structural calculations	LS	1		
20.	Boulders and GFRC boulders	LS	1		
21.	Monument sign logo replacement	EA	1		
22.	2' square pilaster	EA	14		
23.	Memorial plaque relocation with boulders	LS	1		
24.	Retaining wall	SF	740		
25.	Guard rail	LF	165		
PART C – Site Furniture					
26.	Interpretive signage	LS	1		
27.	Drinking fountain	EA	1		
28.	Trash receptacle	EA	6		
29.	Thematic bench	EA	3		
30.	Bench	EA	14		
31.	Picnic table- standard	EA	10		
32.	Picnic table- ADA	EA	2		
33.	Pet waste container	EA	2		

34.	Birdhouse	EA	5		
PART D – Landscape & Irrigation Improvements					
35.	Automatic irrigation system	SF	149,133		
36.	Controller	EA	1		
37.	Soil Preparation, Weed Abatement and Fine Grading	SF	149,133		
38.	Seeded turf	SF	62,402		
39.	No-mow sodded turf	SF	12,056		
40.	3" thick mulch layer	SF	74,675		
41.	24" box tree	EA	103		
42.	5 gallon shrub	EA	1,066		
43.	1 gallon shrub	EA	3,491		
44.	4" pot	EA	164		
45.	Plug liner	EA	1,551		
46.	Relocate and plant existing trees and memorial plaques with addition of GPS coordinates	EA	30		
47.	90 Day Plant Establishment and Maintenance Period	LS	1		
SUBTOTAL PARTS "A"THROUGH "D"					
DELETABLE ITEMS					
PART E – Lake Refurbishment					
48.	Removal & Reconstruction of Existing Pond Overflow with connection to Storm Drain	LS	1		
49.	Pond Drainage including temporary connection to ETWD sewer & permits	LS	1		
50.	Dewatering and Disposal of Pond	LS	1		

	Sediment (Est. 2,700 CY)				
51.	Floating island	LS	1		
52.	Floating fountains	LS	1		
53.	Filter	LS	1		
54A.	Cast in-place vault pump station	LS	1		
55.	Installation of new pump	LS	1		
56.	Piping (including installation of discharge & suction lines and screens)	LS	1		
57.	Salvage & Re-use of Existing Aeration Equipment	LS	1		
58.	Alum Addition System	LS	1		
59.	Miscellaneous pump station appurtenances (fittings, ladder, lights, etc)	LS	1		
60.	Control Panel & Electrical Installation	LS	1		
61.	Automatic Fill	LS	1		
	SUBTOTAL PART "E"				
	TOTAL BASE BID AMOUNT PARTS "A"THROUGH "E"				

In case of discrepancy between the written price and the numerical price, the written piece shall prevail.

ADD ALTERNATIVE ITEMS					
54B.	Substitutes for 53A – Alternate - Pre-Cast Vault	LS	1		

In case of discrepancy between the unit price and the item cost set forth for a unit basis item, the unit price shall prevail and, shall be utilized as the basis for determining the lowest responsive, responsible bidder. However, if the amount set forth as a unit price is ambiguous, unintelligible or uncertain for any cause, or is omitted, or is the same amount as the entry in the "Item Cost" column, then the amount set forth in the "Item Cost" column for the item shall prevail and shall be divided by the estimated quantity for the item and the price thus obtained shall be the unit price. If any of the above discrepancies exist, the City may recalculate the bid price on the basis of the unit price and the bidder agrees to be bound by such recalculation. Final payment shall be

determined by the Engineer from measured quantities of work performed based upon the unit price.

TOTAL BASE BID PRICE (BASED ON BID SCHEDULE - PARTS "A" through "E") WITHOUT ADD ALTERNATIVE ITEMS:

$ _____

Total Base Bid Price in Numbers

_____

Total Bid Price in Written Form

In case of discrepancy between the written price and the numerical price, the written price shall prevail.

The undersigned agrees that this Bid Form constitutes a firm offer to City which cannot be withdrawn for the number of calendar days indicated in the Notice Inviting Bids from the bid opening, or until a Contract for the Work is fully executed by City and a third party, whichever is earlier.

The Contract duration shall commence on the date stated in City's Notice to Proceed, and shall be completed by the Contractor in the time specified in the Contract Documents. In no case shall the Contractor commence construction prior to the date stated in City's Notice to Proceed.

Bidder certifies that it is licensed in accordance with the law providing for the registration of Contractors, License No. _____, Expiration Date _____, class of license _____. If the bidder is a joint venture, each member of the joint venture must include the above information.

The undersigned acknowledges receipt, understanding and full consideration of the following addenda to the Contract Documents.

Addenda No. _____

Addenda No. _____

Addenda No. _____

Bidder has attached the following:

1. The required bid security in the amount of not less than 10% of the Total Bid Price.

2. The fully executed Noncollusion Declaration form.

3. The completed Designation of Subcontractors form.

4. The completed Bidder Information Form.

5. The completed Contractor's Certificate Regarding Workers' Compensation form.

6. The completed Iran Contracting Act Certification form.

7. The completed Public Works Contractor Registration Certification form.

I hereby certify under penalty of perjury under the laws of the State of California, that all of the information submitted in connection with this Bid and all of the representations made herein are true and correct.

Name of Bidder_____

Signature_____

Name_____

Title_____

Dated_____

END OF BID FORM

SECTION 00405
CONTRACTOR'S CERTIFICATE REGARDING WORKERS' COMPENSATION

I am aware of the provisions of Section 3700 of the Labor Code which require every employer to be insured against liability for workers' compensation or to undertake self-insurance in accordance with the provisions of that code, and I will comply with such provisions before commencing the performance of the work of this Contract.

Name of Bidder_____

Signature_____

Name_____

Title_____

Dated_____

END OF CONTRACTOR'S CERTIFICATE REGARDING WORKERS' COMPENSATION

SECTION 00410
BID BOND

The makers of this bond are _____, as Principal, and _____, as Surety and are held and firmly bound unto the City of Lake Forest, hereinafter called City, in the penal sum of TEN PERCENT (10%) OF THE TOTAL BID PRICE of the Principal submitted to City for the work described below, for the payment of which sum in lawful money of the United States, well and truly to be made, we bind ourselves, our heirs, executors, administrators, successors and assigns, jointly and severally, firmly by these presents.

THE CONDITION OF THIS OBLIGATION IS SUCH that whereas the Principal has submitted the accompanying bid dated _____, 2016 for the Village Pond Park Improvement Project.

If the Principal does not withdraw its bid within the time specified in the Contract Documents; and if the Principal is awarded the Contract and provides all documents to City as required by the Contract Documents; then this obligation shall be null and void. Otherwise, this bond will remain in full force and effect.

Surety, for value received, hereby stipulates and agrees that no change, extension of time, alteration or addition to the terms of the Contract Documents shall in affect its obligation under this bond, and Surety does hereby waive notice of any such changes.

In the event a lawsuit is brought upon this bond by City and judgment is recovered, the Surety shall pay all litigation expenses incurred by City in such suit, including reasonable attorneys' fees, court costs, expert witness fees and expenses.

IN WITNESS WHEREOF, the above-bound parties have executed this instrument under their several seals this _____ day of _____, 2016, the name and corporate seal of each corporation.

(Corporate Seal)_____

Contractor/ Principal

By

Title

(Corporate Seal)_____

Surety

By

Attorney-in-Fact

(Attach Attorney-in-Fact Certificate) Title_____

Notary Acknowledgment

A notary public or other officer completing this certificate verifies only the identity of the individual who signed the document to which this certificate is attached, and not the truthfulness, accuracy, or validity of that document.

STATE OF CALIFORNIA
COUNTY OF _____

On _____, 20___, before me, _____, Notary Public, personally

appeared _____, who proved to me on the basis of satisfactory

evidence to be the person(s) whose name(s) is/are subscribed to the within instrument and acknowledged to me that he/she/they executed the same in his/her/their authorized capacity(ies), and that by his/her/their signature(s) on the instrument the person(s), or the entity upon behalf of which the person(s) acted, executed the instrument.

I certify under PENALTY OF PERJURY under the laws of the State of California that the foregoing paragraph is true and correct.

WITNESS my hand and official seal.

_____

Signature of Notary Public

OPTIONAL

Though the information below is not required by law, it may prove valuable to persons relying on the document and could prevent fraudulent removal and reattachment of this form to another document.

CAPACITY CLAIMED BY SIGNER

☐ Individual
☐ Corporate Officer

_____
Title(s)

☐ Partner(s) ☐ Limited ☐ General
☐ Attorney-In-Fact
☐ Trustee(s)
☐ Guardian/Conservator
☐ Other:

Signer is representing:
Name Of Person(s) Or Entity(ies)

_____

_____

DESCRIPTION OF ATTACHED DOCUMENT

_____
Title or Type of Document

_____
Number of Pages

_____
Date of Document

_____
Signer(s) Other Than Named Above

SECTION 00420
NON-COLLUSION DECLARATION

The undersigned declares:

I am the _____ of _____, the party making the foregoing bid.

The bid is not made in the interest of, or on behalf of, any undisclosed person, partnership, company, association, organization, or corporation. The bid is genuine and not collusive or sham. The bidder has not directly or indirectly induced or solicited any other bidder to put in a false or sham bid. The bidder has not directly or indirectly colluded, conspired, connived, or agreed with any bidder or anyone else to put in a sham bid, or to refrain from bidding. The bidder has not in any manner, directly or indirectly, sought by agreement, communication, or conference with anyone to fix the bid price of the bidder or any other bidder, or to fix any overhead, profit, or cost element of the bid price, or of that of any other bidder. All statements contained in the bid are true. The bidder has not, directly or indirectly, submitted his or her bid price or any breakdown thereof, or the contents thereof, or divulged information or data relative thereto, to any corporation, partnership, company association, organization, bid depository, or to any member or agent thereof to effectuate a collusive or sham bid, and has not paid, and will not pay, any person or entity for such purpose.

Any person executing this declaration on behalf of a bidder that is a corporation, partnership, joint venture, limited liability company, limited liability partnership, or any other entity, hereby represents that he or she has full power to execute, and does execute, this declaration on behalf of the bidder.

I declare under penalty of perjury under the laws of the State of California that the foregoing is true and correct and that this declaration is executed on _____[date], at _____[city], _____[state].

Name of Bidder_____

Signature_____

Name_____

Title_____

Dated_____

END OF NONCOLLUSION DECLARATION

SECTION 00430
CONTRACTOR INFORMATION AND EXPERIENCE FORM

A. INFORMATION ABOUT BIDDER

Failure to complete all information may render your bid nonresponsive - indicate not applicable ("N/A") where appropriate.

NOTE: Where Bidder is a joint venture, pages shall be duplicated and information provided for all parties to the joint venture.

1.0 Name of Bidder: _____

2.0 Type, if Entity:

_____

3.0 Bidder Address: _____

_____

_____

_____

Facsimile Number _____ Telephone Number_____

Website Address_____

4.0 How many years has Bidder's organization been in business as a Contractor? _____

5.0 How many years has Bidder's organization been in business under its present name? _____

5.1 Under what other or former names has Bidder's organization operated?:_____

6.0 If Bidder's organization is a corporation, answer the following:

6.1 Date of Incorporation: _____

6.2 State of Incorporation: _____

6.3 President's/CEO Name: _____

6.4 Vice President's Name(s): _____

6.5 Secretary's Name: _____

6.6 Treasurer's Name: _____

7.0 If an individual or a partnership, answer the following:

Date of Organization:_____

7.1 Name and address of all partners (state whether general or limited partnership):

_____

_____

_____

8.0 If other than a corporation or partnership, describe organization and name principals:

_____

_____

9.0 List other states in which Bidder's organization is legally qualified to do business.

_____

_____

10.0 What type of work does the Bidder normally perform with its own forces?

_____

_____

11.0 Has Bidder ever failed to complete any work awarded to it? If so, note when, where, and why:

_____

_____

12.0 Has the Bidder ever been in default, debarred or suspended in any way? If so, note when and why: _____

_____

13.0 Within the last five years, has any officer or partner of Bidder's organization ever been an officer or partner of another organization when it failed to complete a contract? If so, attach a separate sheet of explanation:

_____

_____

14.0 List Trade References (Materials Suppliers, Vendors, Union Representatives, etc.:

_____

_____

_____

_____

15.0 List Bank References (Bank and Branch Address):

_____

_____

_____

16.0 Name of Bonding Company and Name and Address, email address and phone number of Agent:

_____

_____

_____

B. LIST OF CURRENT PROJECTS (BACKLOG)

Duplicate Page if needed for listing additional current projects.

Project and Client Contact Person and Phone Number	Description of Bidder's Work	Completion Date	Cost of Bidder's Work	Amounted Bonded

C. LIST OF COMPLETED PROJECTS LAST THREE YEARS

Duplicate Page if needed for listing additional completed projects.

Please include only those projects which are similar enough to demonstrate Bidder's ability to perform the required Work. Do not use a substitute reference check form. The following are the names, addresses, and telephone numbers for three (3) public agencies, **other than the City of Lake Forest**, for which **BIDDER** has acted as the **PRIME CONTRACTOR** and performed **SIMILAR** work within the past three (3) years.

Client	Description of Bidder's Work	Period of Performance	Cost of Bidder's Work	Contact Name & Phone

D. EXPERIENCE AND TECHNICAL QUALIFICATIONS QUESTIONNAIRE

Personnel:

The Bidder shall identify the key personnel to be assigned to this project in a management, construction supervision or engineering capacity.

1. List each person's job title, name and percent of time to be allocated to this project:

   _____

   _____

   _____

   _____

2. Summarize each person's specialized education:

   _____

   _____

   _____

3. List each person's years of construction experience relevant to the project:

   _____

   _____

   _____

4. Summarize such experience:

   _____

   _____

   _____

Bidder agrees that any personnel named in this Bid will remain on this Project until completion of all relevant Work, unless substituted by personnel of equivalent experience and qualifications approved in advance by City.

Additional Bidder's Statements:

If the Bidder feels that there is additional information which has not been included in the questionnaire above, and which would contribute to the qualification review, it may add that information in a statement here or on an attached sheet, appropriately marked:

_____

_____

_____

_____

VERIFICATION AND EXECUTION

These Bid Forms shall be executed only by a duly authorized official of the Bidder:

I declare under penalty of perjury under the laws of the State of California that the foregoing information is true and correct:

Name of Bidder_____

Signature_____

Name_____

Title_____

Dated_____

END OF CONTRACTOR INFORMATION AND EXPERIENCE FORM

SECTION 00440
LIST OF SUBCONTRACTORS FORM

In compliance with the Subletting and Subcontracting Fair Practices Act of the Public Contract Code of the State of California, each bidder shall set forth below: (a) the name and the location of the place of business, (b) the California contractor license number, and (c) the portion of the work which will be done by each subcontractor who will perform work or labor or render service to the Contractor in or about the construction of the work in an amount in excess of one-half of one percent (1/2%) of the Contractor's Total Bid Price. Notwithstanding the foregoing, if the work involves streets and highways, then the Contractor shall list each subcontractor who will perform work or labor or render service to Contractor in or about the work in an amount in excess of one-half of one percent (1/2%) of the Contractor's Total Bid Price or $10,000, whichever is greater. No additional time shall be granted to provide the below requested information.

If no subcontractor is specified, for a portion of the work, or if more than one subcontractor is specified for the same portion of Work, then the Contractor shall be deemed to have agreed that it is fully qualified to perform that Work, and that it shall perform that portion itself. **The Prime Contractor is required to complete at least 50% of the contract value with its own forces.**

Work to be done by Subcontractor	Subcontractor	Location of Business	CSLB Contractor License No.	DIR Registration Number	% of the Work

Work to be done by Subcontractor	Subcontractor	Location of Business	CSLB Contractor License No.	DIR Registration Number	% of the Work

.

Name of Bidder_____

Signature_____

Name_____

Title_____

Dated_____

END OF LIST OF SUBCONTRACTORS FORM

SECTION 00450
IRAN CONTRACTING ACT CERTIFICATION
(PUBLIC CONTRACT CODE SECTION 2200 ET SEQ.)

As required by California Public Contract Code Section 2204, the Contractor certifies subject to penalty for perjury that the option checked below relating to the Contractor's status in regard to the Iran Contracting Act of 2010 (Public Contract Code Section 2200 et seq.) is true and correct:

□ The Contractor is not:

(i) identified on the current list of persons and entities engaging in investment activities in Iran prepared by the California Department of General Services in accordance with subdivision (b) of Public Contract Code Section 2203; or

(ii) a financial institution that extends, for 45 days or more, credit in the amount of $20,000,000 or more to any other person or entity identified on the current list of persons and entities engaging in investment activities in Iran prepared by the California Department of General Services in accordance with subdivision (b) of Public Contract Code Section 2203, if that person or entity uses or will use the credit to provide goods or services in the energy sector in Iran.

□ The City has exempted the Contractor from the requirements of the Iran Contracting Act of 2010 after making a public finding that, absent the exemption, the City will be unable to obtain the goods and/or services to be provided pursuant to the Contract.

□ The amount of the Contract payable to the Contractor for the Project does not exceed $1,000,000.

Signed:_____

Titled:_____

Firm:_____

Date:_____

Note: In accordance with Public Contract Code Section 2205, false certification of this form shall be reported to the California Attorney General and may result in civil penalties equal to the greater of $250,000 or twice the Contract amount, termination of the Contract and/or ineligibility to bid on contracts for three years.

END OF IRAN CONTRACTING ACT CERTIFICATION

SECTION 00460
PUBLIC WORKS CONTRACTOR REGISTRATION CERTIFICATION

If this bid is due on or after March 1, 2015, then pursuant to Labor Code sections 1725.5 and 1771.1, all contractors and subcontractors that wish to bid on, be listed in a bid proposal, or enter into a contract to perform public work must be registered with the Department of Industrial Relations. See http://www.dir.ca.gov/Public-Works/PublicWorks.html for additional information.

No bid will be accepted nor any contract entered into without proof of the contractor's and subcontractors' current registration with the Department of Industrial Relations to perform public work.

Bidder hereby certifies that it is aware of the registration requirements set forth in Labor Code sections 1725.5 and 1771.1 and is currently registered as a contractor with the Department of Industrial Relations.

Name of Bidder:_____

DIR Registration Number:_____

Bidder further acknowledges:

1. Bidder shall maintain a current DIR registration for the duration of the project.
2. Bidder shall include the requirements of Labor Code sections 1725.5 and 1771.1 in its contract with subcontractors and ensure that all subcontractors are registered at the time of bid opening and maintain registration status for the duration of the project.
3. Failure to submit this form or comply with any of the above requirements may result in a finding that the bid is non-responsive.

Name of Bidder_____

Signature_____

Name_____

Title_____

Dated_____

END OF PUBLIC WORKS CONTRACTOR REGISTRATION CERTIFICATION

SECTION 00500
CONTRACT

THIS CONTRACT is made this _____ day of _____, 2016, in the County of Orange, State of California, by and between the City of Lake Forest hereinafter called City, and _____, hereinafter called Contractor. City and the Contractor for the considerations stated herein agree as follows:

ARTICLE 1. SCOPE OF WORK. The Contractor shall perform all Work within the time stipulated the contract and shall provide all labor, materials, equipment, tools, utility services, and transportation to complete all of the Work required in strict compliance with the Contract Documents as specified in Article 5 below for the following Project:

Village Pond Park Improvement Project

The Contractor and its surety shall be liable to City for any damages arising as a result of the Contractor's failure to comply with this obligation.

ARTICLE 2. TIME FOR COMPLETION. The Work shall be commenced on the date stated in City's Notice to Proceed. The Contractor shall complete all Work required by the Contract Documents within **130 WORKING DAYS** working days from the commencement date stated in the Notice to Proceed. By its signature hereunder, Contractor agrees the time for completion set forth above is adequate and reasonable to complete the Work.

ARTICLE 3. CONTRACT PRICE. City shall pay to the Contractor as full compensation for the performance of the Contract, subject to any additions or deductions as provided in the Contract Documents, and including all applicable taxes and costs, the sum of _____ Dollars ($_____). Payment shall be made as set forth in the General Conditions**.**

At any time during the term of the Contract, City may, pursuant to the terms and provisions of the Contract Documents, request that the Contractor perform additional work. Contractor shall not perform, nor be compensated for, additional work without written authorization from the City pursuant to the terms and provisions of the Contract Documents. Notwithstanding any other provisions of the Contract Documents, for contracts in excess of $175,000.00, the City Manager may approve additional work not to exceed 10% of the original Contract amount, [**insert 10% dollar amount ($XXXXX)**], as set forth in this Article 3. Any additional work in excess of this amount shall be approved by the City Council.

ARTICLE 4. LIQUIDATED DAMAGES. In accordance with Government Code section 53069.85, it is agreed that the Contractor will pay City the sum of $500 for each and every calendar day of delay beyond the time prescribed in the Contract Documents for finishing the Work, as Liquidated Damages and not as a penalty or forfeiture. In the event that Liquidated Damages are not paid, the Contractor agrees City may deduct

that amount from any money due or that may become due the Contractor under the Contract. This Article does not exclude recovery of other damages specified in the Contract Documents.

ARTICLE 5. COMPONENT PARTS OF THE CONTRACT. The "Contract Documents" include the following:

Notice Inviting Bids
Instructions to Bidders
Bid Form
Contractor's Certificate Regarding Workers' Compensation
Bid Bond
Designation of Subcontractors
Information Required of Bidders
Noncollusion Declaration form
Iran Contracting Act Certification
Public Works Contractor Registration Certification
Contract
Performance Bond
Payment Bond
General Conditions
Special Conditions
Technical Specifications
Addenda
Plans and Drawings
Approved and fully executed change orders
Any other documents contained in or incorporated into the Contract

The Contactor shall complete the Work in strict accordance with all of the Contract Documents.

All of the Contract Documents are intended to be complementary. Work required by one of the Contract Documents and not by others shall be done as if required by all. This Contract shall supersede any prior agreement of the parties.

ARTICLE 6. PROVISIONS REQUIRED BY LAW. Each and every provision of law required to be included in these Contract Documents shall be deemed to be included in these Contract Documents. The Contractor shall comply with all requirements of applicable federal, state and local laws, rules and regulations, including, but not limited to, the provisions of the California Labor Code and California Public Contract Code which are applicable to this Project.

ARTICLE 7. INDEMNIFICATION. Contractor shall provide indemnification as set forth in the General Conditions.

ARTICLE 8. PREVAILING WAGES. Contractor shall be required to pay the prevailing rate of wages in accordance with the Labor Code which such rates shall be made available at the Department of Public Works or may be obtained online at http//www.dir.ca.gov/dlsr. and which must be posted at the job site.

IN WITNESS WHEREOF, this Contract has been duly executed by the above-named parties, on the day and year above written.

[NAME OF CONTRACTOR]	**CITY OF LAKE FOREST**
By _____	By_____
Name and Title: _____	
License No. _____	
[[If Corporation, TWO SIGNATURES, President **OR** Vice President **AND** Secretary OR Treasurer REQUIRED]]	

END OF CONTRACT

SECTION 00610
PERFORMANCE BOND

KNOW ALL PERSONS BY THESE PRESENTS:

THAT WHEREAS, the City of Lake Forest (hereinafter referred to as "City") has awarded to _____, (hereinafter referred to as the "Contractor") an agreement for _____ (hereinafter referred to as the "Project").

WHEREAS, the work to be performed by the Contractor is more particularly set forth in the Contract Documents for the Project dated _____, (hereinafter referred to as "Contract Documents"), the terms and conditions of which are expressly incorporated herein by reference; and

WHEREAS, the Contractor is required by said Contract Documents to perform the terms thereof and to furnish a bond for the faithful performance of said Contract Documents.

NOW, THEREFORE, we, _____, the undersigned Contractor and _____as Surety, a corporation organized and duly authorized to transact business under the laws of the State of California, are held and firmly bound unto the City in the sum of _____ DOLLARS and _____ CENTS ($_____), said sum being not less than one hundred percent (100%) of the total amount of the Contract, for which amount well and truly to be made, we bind ourselves, our heirs, executors and administrators, successors and assigns, jointly and severally, firmly by these presents.

THE CONDITION OF THIS OBLIGATION IS SUCH, that, if the Contractor, his or its heirs, executors, administrators, successors or assigns, shall in all things stand to and abide by, and well and truly keep and perform the covenants, conditions and agreements in the Contract Documents and any alteration thereof made as therein provided, on its part, to be kept and performed at the time and in the manner therein specified, and in all respects according to their intent and meaning; and shall faithfully fulfill all obligations including, if provided as part of the Contract Documents, the one-year guarantee of all materials and workmanship; and shall indemnify and save harmless the City, its officers and agents, as stipulated in said Contract Documents, then this obligation shall become null and void; otherwise it shall be and remain in full force and effect.

As a condition precedent to the satisfactory completion of the Contract Documents, unless otherwise provided for in the Contract Documents, the guarantee obligation shall hold good for a period of one (1) year after the acceptance of the work by City, during which time if Contractor shall fail to make full, complete, and satisfactory repair and replacements and totally protect the City from loss or damage resulting from or caused by defective materials or faulty workmanship the above obligation in penal sum thereof shall remain in full force and effect. However, anything in this paragraph to the contrary notwithstanding, the obligations of Surety hereunder shall continue so long as any obligation of Contractor remains. Nothing herein shall limit the City's rights or the Contractor or Surety's obligations under the Contract Documents, law or equity, including, but not limited to, California Code of Civil Procedure section 337.15.

Whenever Contractor shall be, and is declared by the City to be, in default under the Contract Documents, the Surety shall remedy the default pursuant to the Contract Documents, or shall promptly, at the City's option:

(1) Take over and complete the Project in accordance with all terms and conditions in the Contract Documents; or

(2) Obtain a bid or bids for completing the Project in accordance with all terms and conditions in the Contract Documents and upon determination by Surety of the lowest responsive and responsible bidder, arrange for a contract between such bidder, the Surety and the City, and make available as work progresses sufficient funds to pay the cost of completion of the Project, less the balance of the contract price, including other costs and damages for which Surety may be liable. The term "balance of the contract price" as used in this paragraph shall mean the total amount payable to Contractor by the City under the Contract Documents and any modification thereto, less any amount previously paid by the City to the Contractor and any other set offs pursuant to the Contract Documents.

(3) Permit the City to complete the Project in any manner consistent with California law and make available as work progresses sufficient funds to pay the cost of completion of the Project, less the balance of the contract price, including other costs and damages for which Surety may be liable. The term "balance of the contract price" as used in this paragraph shall mean the total amount payable to Contractor by the City under the Contract Documents and any modification thereto, less any amount previously paid by the City to the Contractor and any other set offs pursuant to the Contract Documents.

Surety expressly agrees that the City may reject any contractor or subcontractor which may be proposed by Surety in fulfillment of its obligations in the event of default by the Contractor.

Surety shall not utilize Contractor in completing the Project nor shall Surety accept a bid from Contractor for completion of the Project if the City, when declaring the Contractor in default, notifies Surety of the City's objection to Contractor's further participation in the completion of the Project.

The Surety, for value received, hereby stipulates and agrees that no change, extension of time, alteration or addition to the terms of the Contract Documents or to the Project to be performed thereunder shall in any way affect its obligations on this bond, and it does hereby waive notice of any such change, extension of time, alteration or addition to the terms of the Contract Documents or to the Project and the provisions of Section 2819 and 2845 of the California Civil Code. Without limiting the foregoing, such changes, extensions of time and alterations or additions shall include, but are not limited to, changes or alterations to the Contract Documents (including, without limitation, an increase in the total dollar amount of the Contract Documents), extensions of time, or modifications of the time, terms, or conditions of payment to the Contractor.

IN WITNESS WHEREOF, we have hereunto set our hands and seals this _____ day of _____, 20___.

CONTRACTOR/PRINCIPAL
(Corporate Seal of Contractor/
Principal, if a Corporation)

_____
Name of Contractor/Principal (Type or Print)

By: _____
Name (Signature)

_____
Name (Type or Print)

_____
Title (Type or Print)

SURETY
(Seal of Surety)

_____
Name of Surety (Type or Print)

By:_____
Attorney-In-Fact

Signatures of those signing for the Contractor and Surety must be notarized and evidence of corporate authority attached.

The rate of premium on this bond is _____ per thousand. The total amount of premium charges, $_____.

(The above must be filled in by corporate attorney.)

THIS IS A REQUIRED FORM
Any claims under this bond may be addressed to:

(Name and Address of Surety) _____
_____
_____

(Name and Address of Agent or Representative for service of process in California, if different from above) _____
_____
_____

(Telephone number of Surety and Agent or Representative for service of process in California) _____
_____
_____

Notary Acknowledgment

A notary public or other officer completing this certificate verifies only the identity of the individual who signed the document to which this certificate is attached, and not the truthfulness, accuracy, or validity of that document.

STATE OF CALIFORNIA
COUNTY OF _____

On _____, 20___, before me, _____, Notary Public, personally

appeared _____, who proved to me on the basis of satisfactory

evidence to be the person(s) whose name(s) is/are subscribed to the within instrument and acknowledged to me that he/she/they executed the same in his/her/their authorized capacity(ies), and that by his/her/their signature(s) on the instrument the person(s), or the entity upon behalf of which the person(s) acted, executed the instrument.

I certify under PENALTY OF PERJURY under the laws of the State of California that the foregoing paragraph is true and correct.

WITNESS my hand and official seal.

_____

Signature of Notary Public

OPTIONAL

Though the information below is not required by law, it may prove valuable to persons relying on the document and could prevent fraudulent removal and reattachment of this form to another document.

CAPACITY CLAIMED BY SIGNER

☐ Individual
☐ Corporate Officer

_____
Title(s)

☐ Partner(s) ☐ Limited ☐ General
☐ Attorney-In-Fact
☐ Trustee(s)
☐ Guardian/Conservator
☐ Other:

Signer is representing:
Name Of Person(s) Or Entity(ies)

_____

_____

DESCRIPTION OF ATTACHED DOCUMENT

_____
Title or Type of Document

_____
Number of Pages

_____
Date of Document

_____
Signer(s) Other Than Named Above

NOTE: A copy of the Power-of-Attorney to local representatives of the bonding company must be attached hereto.

END OF PERFORMANCE BOND FORM

SECTION 00620
PAYMENT BOND

KNOW ALL MEN BY THESE PRESENTS That

WHEREAS, the City of Lake Forest (hereinafter designated as the "City"), by action taken or a resolution passed _____ , 20____ has awarded to _____ _____ hereinafter designated as the "Principal," a contract for the work described as follows: _____ _____ (the "Project"); and

WHEREAS, the work to be performed by the Principal is more particularly set forth in the Contract Documents for the Project dated _____, (hereinafter referred to as "Contract Documents"), the terms and conditions of which are expressly incorporated herein by reference; and

WHEREAS, said Principal is required to furnish a bond in connection with said Contract Documents; providing that if said Principal or any of its Subcontractors shall fail to pay for any materials, provisions, provender, equipment, or other supplies used in, upon, for or about the performance of the work contracted to be done, or for any work or labor done thereon of any kind, or for amounts due under the Unemployment Insurance Code or for any amounts required to be deducted, withheld, and paid over to the Employment Development Department from the wages of employees of said Principal and its Subcontractors with respect to such work or labor, the Surety on this bond will pay for the same to the extent hereinafter set forth.

NOW THEREFORE, we, the Principal and _____ as Surety, are held and firmly bound unto the City in the penal sum of _____ _____ DOLLARS and _____ CENTS ($_____) lawful money of the United States of America, for the payment of which sum well and truly to be made, we bind ourselves, our heirs, executors, administrators, successors and assigns, jointly and severally, firmly by these presents.

THE CONDITION OF THIS OBLIGATION IS SUCH that if said Principal, his or its subcontractors, heirs, executors, administrators, successors or assigns, shall fail to pay any of the persons named in Section 9100 of the Civil Code, fail to pay for any materials, provisions or other supplies, used in, upon, for or about the performance of the work contracted to be done, or for any work or labor thereon of any kind, or amounts due under the Unemployment Insurance Code with respect to work or labor performed under the Contract Documents, or for any amounts required to be deducted, withheld, and paid over to the Employment Development Department or Franchise Tax Board from the wages of employees of the contractor and his subcontractors pursuant to Section 18663 of the Revenue and Taxation Code, with respect to such work and labor the Surety or Sureties will pay for the same, in an amount not exceeding the sum herein above specified, and also, in case suit is brought upon this bond, all litigation expenses incurred by the City in such suit, including reasonable attorneys' fees, court costs, expert witness fees and investigation expenses.

This bond shall inure to the benefit of any of the persons named in Section 9100 of the Civil Code so as to give a right of action to such persons or their assigns in any suit brought upon this bond.

It is further stipulated and agreed that the Surety on this bond shall not be exonerated or released from the obligation of this bond by any change, extension of time for performance, addition, alteration or modification in, to, or of any contract (including the Contract Documents), plans, specifications, or agreement pertaining or relating to any scheme or work of improvement herein above described, or pertaining or relating to the furnishing of labor, materials, or equipment therefore, nor by any change or modification of any terms of payment or extension of the time for any payment pertaining or relating to any scheme or work of improvement herein above described, nor by any rescission or attempted rescission or attempted rescission of the Contract Documents, agreement or bond, nor by any conditions precedent or subsequent in the bond attempting to limit the right of recovery of claimants otherwise entitled to recover under any such contract or agreement or under the bond, nor by any fraud practiced by any person other than the claimant seeking to recover on the bond and that this bond be construed most strongly against the Surety and in favor of all persons for whose benefit such bond is given, and under no circumstances shall Surety be released from liability to those for whose benefit such bond has been given, by reason of any breach of contract between the owner or City and original contractor or on the part of any obligee named in such bond, but the sole conditions of recovery shall be that claimant is a person described in Section 9100 of the Civil Code, and has not been paid the full amount of his claim and that Surety does hereby waive notice of any such change, extension of time, addition, alteration or modification herein mentioned.

Notwithstanding any other provision of this bond, it is expressly understood, acknowledged and agreed that it shall provide all of the protections required by California Civil Code Sections 9550 through 9566, including the specific coverage protections required by Section 9554.

REMAINDER OF PAGE LEFT INTENTIONALLY BLANK

SIGNATURES ON FOLLOWING PAGE

IN WITNESS WHEREOF, two (2) identical counterparts of this instrument, each of which shall for all purposes be deemed an original thereof, have been duly executed by the Principal and Surety above named, on the _____ day of _____ 20_____ the name and corporate seal of each corporate party being hereto affixed and these presents duly signed by its undersigned representative pursuant to authority of its governing body.

CONTRACTOR/PRINCIPAL
(Corporate Seal of Contractor/
Principal, if a Corporation)

_____
Name of Contractor/Principal (Type or Print)

By: _____
Name (Signature)

_____
Name (Type or Print)

_____
Title (Type or Print)

SURETY
(Seal of Surety)

_____
Name of Surety (Type or Print)

By:_____
Attorney-In-Fact

Notary Acknowledgment

A notary public or other officer completing this certificate verifies only the identity of the individual who signed the document to which this certificate is attached, and not the truthfulness, accuracy, or validity of that document.

STATE OF CALIFORNIA
COUNTY OF _____

On _____, 20___, before me, _____, Notary Public, personally

appeared _____, who proved to me on the basis of satisfactory

evidence to be the person(s) whose name(s) is/are subscribed to the within instrument and acknowledged to me that he/she/they executed the same in his/her/their authorized capacity(ies), and that by his/her/their signature(s) on the instrument the person(s), or the entity upon behalf of which the person(s) acted, executed the instrument.

I certify under PENALTY OF PERJURY under the laws of the State of California that the foregoing paragraph is true and correct.

WITNESS my hand and official seal.

_____

Signature of Notary Public

OPTIONAL

Though the information below is not required by law, it may prove valuable to persons relying on the document and could prevent fraudulent removal and reattachment of this form to another document.

CAPACITY CLAIMED BY SIGNER

☐ Individual
☐ Corporate Officer

_____
Title(s)

☐ Partner(s) ☐ Limited ☐ General
☐ Attorney-In-Fact
☐ Trustee(s)
☐ Guardian/Conservator
☐ Other:

Signer is representing:
Name Of Person(s) Or Entity(ies)

_____

_____

DESCRIPTION OF ATTACHED DOCUMENT

_____
Title or Type of Document

_____
Number of Pages

_____
Date of Document

_____
Signer(s) Other Than Named Above

NOTE: A copy of the Power-of-Attorney to local representatives of the bonding company must be attached hereto.

END OF PAYMENT BOND FORM

SECTION 00700
GENERAL CONDITIONS

ARTICLE 1. DEFINITIONS

a. Acceptable, Acceptance or words of similar import shall be understood to be the acceptance of the Engineer and/or City.

b. Act of God is an earthquake in excess of a magnitude of 3.5 on the Richter scale and tidal waves.

c. Approval means written authorization by Engineer and/or City .

d. Contract Documents includes all documents as stated in the Contract.

e. City and Contractor are those stated in the Contract. The terms City and Owner may be used interchangeably.

f. Day shall mean calendar day unless otherwise specifically designated.

g. Engineer shall mean the City Manager, or his or her designee, of the City, acting either directly or through properly authorized agents, such as agents acting within the scope of the particular duties entrusted to them. Also sometimes referred to as “City’s Representative” or “Representative” in the Contract Documents.

h. Equal, Equivalent, Satisfactory, Directed, Designated, Selected, As Required and similar words shall mean the written approval, selection, satisfaction, direction, or similar action of the Engineer and/or City.

i. Indicated, Shown, Detailed, Noted, Scheduled or words of similar meaning shall mean that reference is made to the drawings, unless otherwise noted. It shall be understood that the direction, designation, selection, or similar import of the Engineer and/or City is intended, unless stated otherwise.

j. Install means the complete installation of any item, equipment or material.

k. Material shall include machinery, equipment, manufactured articles, or construction such as form work, fasteners, etc., and any other classes of material to be furnished in connection with the Contract. All materials shall be new unless specified otherwise.

l. Perform shall mean that the Contractor, at Contractor’s expense, shall take all actions necessary to complete The Work, including furnishing of necessary labor, tools, and equipment, and providing and installing Materials that are indicated, specified, or required to complete such performance.

m. Project is The Work planned by City as provided in the Contract Documents.

n. Provide shall include provide, complete in place, that is furnish, install, test and make ready for use.

o. Recyclable Waste Materials shall mean materials removed from the Project site which are required to be diverted to a recycling center rather than an area landfill. Recyclable Waste Materials include asphalt, concrete, brick, concrete block, and rock.

p. Specifications means that portion of the Contract Documents consisting of the written requirements for materials, equipment, construction systems, standards and workmanship for the work. Except for Sections 1-9 of the Standard Specifications for Public Works Construction ("Greenbook"), 2009 Edition which are specifically excluded from incorporation into these Contract Documents, the Work shall be done in accordance with the Greenbook, including all current supplements, addenda, and revisions thereof. In the case of conflict between the Greenbook and the Contract Documents, the Contract Documents shall prevail.

q. The Work means the entire improvement planned by City pursuant to the Contract Documents.

r. Work means labor, equipment and materials incorporated in, or to be incorporated in the construction covered by the Contract Documents.

ARTICLE 2. CONTRACT DOCUMENTS

a. Contract Documents. The Contract Documents are complementary, and what is called for by one shall be as binding as if called for by all.

b. Interpretations. The Contract Documents are intended to be fully cooperative and to be complementary. If Contractor observes that any documents are in conflict, the Contractor shall promptly notify the Engineer in writing. In case of conflicts between the Contract Documents, the order of precedence shall be as follows:

1) Change Orders or Work Change Directives

2) Addenda

3) Special Provisions (or Special Conditions)

4) Technical Specifications

5) Plans (Contract Drawings)

6) Contract

7) General Conditions

8) Instructions to Bidders

9) Notice Inviting Bids

10) Contractor's Bid Forms

11) Greenbook Standard Specifications (Sections 1-9 Excluded)

12) Standard Plans

13) Reference Documents

With reference to the Drawings, the order of precedence shall be as follows:

1) Figures govern over scaled dimensions

2) Detail drawings govern over general drawings

3) Addenda or Change Order drawings govern over Contract Drawings

4) Contract Drawings govern over Standard Drawings

5) Contract Drawings govern over Shop Drawings

c. Conflicts in Contract Documents. Notwithstanding the orders of precedence established above, in the event of conflicts, the higher standard shall always apply.

d. Organization of Contract Documents. Organization of the Contract Documents into divisions, sections, and articles, and arrangement of drawings shall not control the Contractor in dividing The Work among subcontractors or in establishing the extent of Work to be performed by any trade.

ARTICLE 3. CONTRACTS DOCUMENTS: COPIES & MAINTENANCE

Contractor will be furnished, free of charge, two copies of the Contract Documents. Additional copies may be obtained at cost of reproduction.

Contractor shall maintain a clean, undamaged set of Contract Documents at the Project site.

ARTICLE 4. DETAIL DRAWINGS AND INSTRUCTIONS

a. Examination of Contract Documents. Before commencing any portion of The Work, Contractor shall again carefully examine all applicable Contract Documents, the Project site and other information given to Contractor as to materials and methods of construction and other Project requirements. Contractor shall immediately notify the Engineer of any potential error, inconsistency, ambiguity, conflict or lack of detail or explanation. If Contractor performs, permits, or causes the performance of any Work which is in error, inconsistent or ambiguous, or not sufficiently detailed or explained, Contractor shall bear any and all resulting costs, including, without limitation, the cost of correction. In no case shall the Contractor or any subcontractor proceed with Work if uncertain as to the applicable requirements.

b. Additional Instructions. After notification of any error, inconsistency, ambiguity, conflict or lack of detail or explanation, the Engineer will provide any required additional instructions, by means of drawings or other written direction, necessary for proper execution of Work.

c. Quality of Parts, Construction and Finish. All parts of The Work shall be of the best quality of their respective kinds and the Contractor must use all diligence to inform itself fully as to the required construction and finish. In no case shall Contractor proceed with The Work without obtaining first from the Engineer such Approval may be necessary for the proper performance of Work.

d. Contractor's Variation from Contract Document Requirements. If it is found that the Contractor has varied from the requirements of the Contract Documents including the requirement to comply with all applicable laws, ordinances, rules and regulations, the Engineer may at any time, before or after completion of the Work, order the improper Work removed, remade or replaced by the Contractor at the Contractor's expense.

ARTICLE 5. EXISTENCE OF UTILITIES AT THE WORK SITE

a. City has endeavored to determine the existence of utilities at the Project site from the records of the owners of known utilities in the vicinity of the Project. The positions of these utilities as derived from such records are shown on the Plans.

b. No excavations were made to verify the locations shown for underground utilities. No guarantee is made or implied that the information is complete or accurate. It shall be the Contractor's responsibility alone to determine the exact location of underground utilities or substructures of every nature and to protect them from damage.

c. The service connections to these utilities are not shown on the plans. It shall be the responsibility of the Contractor to determine the exact location of all service connections and, if necessary, Contractor shall arrange for the relocation of service connections. The Contractor shall make its own investigations, including exploratory excavations, to determine the locations and type of service connections, prior to commencing Work which could result in damage to such utilities. The Contractor shall immediately notify City in writing of any utility discovered in a different position than shown on the Plans or which is not shown on the Plans.

d. All water meters, water valves, fire hydrants, electrical utility vaults, telephone vaults, gas utility valves, and other subsurface structures shall be relocated or adjusted to final grade by the Contractor. Locations of existing utilities shown on the Plans are approximate and may not be complete. The Contractor shall be responsible for coordinating its Work with all utility companies during the construction of The Work. The Contractor will not be entitled to damages or additional payment for delays attributable to utility relocations or alterations

e. Notwithstanding the above, pursuant to Section 4215 of the Government Code, City has the responsibility to identify, with reasonable accuracy, main or trunkline facilities on the plans and specifications. In the event that main or trunkline utility facilities are not identified with reasonable accuracy in the plans and specifications made a part of the invitation for bids, City shall assume the responsibility for their timely removal, relocation, or protection.

f. Contractor, except in an emergency, shall contact the appropriate regional notification center, Southern California Underground Service Alert at 1-800-227-2600 at least two working days prior to commencing any excavation if the excavation will be performed in an area which is known, or reasonably should be known, to contain subsurface installations other than the underground facilities owned or operated by City, and obtain an inquiry identification number from that notification center. No excavation shall be commenced or carried out by the Contractor unless such an inquiry identification number has been assigned to the Contractor or any subcontractor of the Contractor and City has been given the identification number by the Contractor.

ARTICLE 6. SCHEDULE

a. Estimated Schedule. Within fourteen (14) days after the issuance of the Notice to Proceed, Contractor shall prepare a Project schedule and shall submit this to the Engineer for Approval. The receipt or Approval of any schedules by the Engineer or City shall not in any way relieve the Contractor of its obligations under the Contract Documents. The

Contractor is fully responsible to determine and provide for any and all staffing and resources at levels which allow for good quality and timely completion of the Project. Contractor's failure to incorporate all elements of Work required for the performance of the Contract or any inaccuracy in the schedule shall not excuse the Contractor from performing all Work required for a completed Project within the specified Contract time period. If the required schedule is not received by the time the first payment under the Contract is due, Contractor shall not be paid until the schedule is received, reviewed and accepted by the Engineer.

b. Schedule Contents. The schedule shall allow enough time for inclement weather. The schedule shall indicate the beginning and completion dates of all phases of construction; critical path for all critical, sequential time related activities; and "float time" for all "slack" or "gaps" in the non-critical activities. The schedule shall clearly identify all staffing and other resources which in the Contractor's judgment are needed to complete the Project within the time specified for completion. Schedule duration shall match the Contract time. Schedules indicating early completion will be rejected.

c. Schedule Updates. Contractor shall continuously update its construction schedule. Contractor shall submit an updated and accurate construction schedule to the Engineer whenever requested to do so by Engineer and with each progress payment request. The Engineer may withhold progress payments or other amounts due under the Contract Documents if Contractor fails to submit an updated and accurate construction schedule.

ARTICLE 7. SUBSTITUTIONS

a. Pursuant to Public Contract Code Section 3400(b) City may make a finding that is described in the invitation for bids that designates certain products, things, or services by specific brand or trade name.

b. Unless specifically designated in the Contract Documents, whenever any material, process, or article is indicated or specified by grade, patent, or proprietary name or by name of manufacturer, such Specifications shall be deemed to be used for the purpose of facilitating the description of the material, process or article desired and shall be deemed to be followed by the words "or equal." Contractor may, unless otherwise stated, offer for substitution any material, process or article which shall be substantially equal or better in every respect to that so indicated or specified in the Contract Documents. However, City may have adopted certain uniform standards for certain materials, processes and articles.

c. Contractor shall submit requests, together with substantiating data, for substitution of any "or equal" material, process or article no later than

thirty-five (35) days after award of the Contract. To facilitate the construction schedule and sequencing, some requests may need to be submitted before thirty-five (35) days after award of Contract. Provisions regarding submission of "or equal" requests shall not in any way authorize an extension of time for performance of this Contract. If a proposed "or equal" substitution request is rejected, Contractor shall be responsible for providing the specified material, process or article. The burden of proof as to the equality of any material, process or article shall rest with the Contractor. City has the complete and sole discretion to determine if a material, process or article is an "or equal" material, process or article that may be substituted.

d. Data required to substantiate requests for substitutions of an "or equal" material, process or article data shall include a signed affidavit from the Contractor stating that, and describing how, the substituted "or equal" material, process or article is equivalent to that specified in every way except as listed on the affidavit. Substantiating data shall include any and all illustrations, specifications, and other relevant data including catalog information which describes the requested substituted "or equal" material, process or article, and substantiates that it is an "or equal" to the material, process or article. The substantiating data must also include information regarding the durability and lifecycle cost of the requested substituted "or equal" material, process or article. Failure to submit all the required substantiating data, including the signed affidavit, to City in a timely fashion will result in the rejection of the proposed substitution.

e. The Contractor shall bear all of City's costs associated with the review of substitution requests.

f. The Contractor shall be responsible for all costs related to a substituted "or equal" material, process or article.

g. Contractor is directed to the Special Conditions (if any) to review any findings made pursuant to Public Contract Code section 3400.

ARTICLE 8. SHOP DRAWINGS

a. Contractor shall check and verify all field measurements and shall submit with such promptness as to provide adequate time for review and cause no delay in his own Work or in that of any other contractor, subcontractor, or worker on the Project, six (6) copies of all shop or setting drawings, calculations, schedules, and materials list, and all other provisions required by the Contract. Contractor shall sign all submittals affirming that submittals have been reviewed and approved by Contractor prior to submission to Engineer. Each signed submittal shall affirm that the submittal meets all the requirements of the Contract Documents except as

specifically and clearly noted and listed on the cover sheet of the submittal.

b. Contractor shall make any corrections required by the Engineer, and file with the Engineer six (6) corrected copies each, and furnish such other copies as may be needed for completion of the Work. Engineer's approval of shop drawings shall not relieve Contractor from responsibility for deviations from the Contract Documents unless Contractor has, in writing, called Engineer's attention to such deviations at time of submission and has secured the Engineer's written Approval. Engineer's Approval of shop drawings shall not relieve Contractor from responsibility for errors in shop drawings.

ARTICLE 9. SUBMITTALS

a. Contractor shall furnish to the Engineer for approval, prior to purchasing or commencing any Work, a log of all samples, material lists and certifications, mix designs, schedules, and other submittals, as required in the specifications. The log shall indicate whether samples will be provided in accordance with other provisions of this Contract.

b. Contractor will provide samples and submittals, together with catalogs and supporting data required by the Engineer, to the Engineer within a reasonable time period to provide for adequate review and avoid delays in the Work.

c. These requirements shall not authorize any extension of time for performance of this Contract. Engineer will check and approve such samples, but only for conformance with design concept of work and for compliance with information given in the Contract Documents. Work shall be in accordance with approved samples and submittals.

ARTICLE 10. MATERIALS

a. Except as otherwise specifically stated in the Contract Documents, Contractor shall provide and pay for all materials, labor, tools, equipment, water, lights, power, transportation, superintendence, temporary constructions of every nature, and all other services and facilities of every nature whatsoever necessary to execute and complete this Contract within specified time.

b. Unless otherwise specified, all materials shall be new and the best of their respective kinds and grades as noted and/or specified, and workmanship shall be of good quality.

c. Materials shall be furnished in ample quantities and at such times as to ensure uninterrupted progress of The Work and shall be stored properly and protected as required by the Contract Documents. Contractor shall be entirely responsible for damage or loss by weather or other causes to materials or Work.

d. No materials, supplies, or equipment for Work under this Contract shall be purchased subject to any chattel mortgage or under a conditional sale or other agreement by which an interest therein or in any part thereof is retained by the seller or supplier. Contractor warrants good title to all material, supplies, and equipment installed or incorporated in the work and agrees upon completion of all work to deliver the Project, to City free from any claims, liens, or charges.

e. Materials shall be stored on the Project site in such manner so as not to interfere with any operations of City or any independent contractor.

ARTICLE 11. CONTRACTOR'S SUPERVISION

Contractor shall continuously keep at the Project site, a competent and experienced full-time Project superintendent approved by City. Superintendent must be able to proficiently speak, read and write in English. Contractor shall continuously provide efficient supervision of the Project.

ARTICLE 12. WORKERS

a. Contractor shall at all times enforce strict discipline and good order among its employees. Contractor shall not employ on the Project any unfit person or any one not skilled in the Work assigned to him or her.

b. Any employee of the Contractor whom City determines is incompetent or unfit shall be removed from this Project.

ARTICLE 13. SUBCONTRACTORS

a. Contractor agrees to bind every subcontractor to the terms of the Contract Documents as far as such terms are applicable to subcontractor's portion of The Work. All subcontracts entered into by Contractor relating to any of the Work under this Contract shall comply with and be limited to the extent required by Civil Code section 2872.05. Contractor shall be as fully responsible to City for the acts and omissions of its subcontractors and of persons either directly or indirectly employed by its subcontractors, as Contractor is for acts and omissions of persons directly employed by Contractor. Nothing contained in these Contract Documents shall create any contractual relationship between any subcontractor and City.

b. City reserves the right to Approve all subcontractors. City's Approval of any subcontractor under this Contract shall not in any way relieve Contractor of its obligations in the Contract Documents.

c. Prior to substituting any subcontractor listed in the Bid Forms, Contractor must comply with the requirements of the Subletting and Subcontracting Fair Practices Act pursuant to California Public Contract Code section 4100 et seq.

ARTICLE 14. PERMITS AND LICENSES

Permits and licenses necessary for prosecution of The Work shall be secured and paid for by Contractor, unless otherwise specified in the Contract Documents.

a. Contractor shall obtain and pay for all other permits and licenses required for The Work, including excavation permit and for plumbing, mechanical and electrical work and for operations in or over public streets or right of way under jurisdiction of public agencies other than City.

b. The Contractor shall arrange and pay for all off-site inspection of the Work related to permits and licenses, including certification, required by the specifications, drawings, or by governing authorities, except for such off-site inspections delineated as City's responsibility pursuant to the Contract Documents.

c. Before Acceptance of the Project, the Contractor shall submit all licenses, permits, certificates of inspection and required approvals to City.

ARTICLE 15. UTILITY USAGE

a. All temporary utilities, including but not limited to electricity, water, gas, and telephone, used on the Work shall be furnished and paid for by Contractor. Contractor shall Provide necessary temporary distribution systems, including meters, if necessary, from distribution points to points on The Work where the utility is needed. Upon completion of The Work, Contractor shall remove all temporary distribution systems.

b. Contractor shall provide necessary and adequate utilities and pay all costs for water, electricity, gas, oil, and sewer charges required for completion of the Project.

c. All permanent meters Installed shall be listed in the Contractor's name until the Work is accepted.

d. If the Contract is for construction in existing facilities, Contractor may, with prior written Approval of City, use City's existing utilities by compensating City for utilities used by Contractor.

ARTICLE 16. INSPECTION FEES FOR PERMANENT UTILITIES

All inspection fees and other municipal charges for permanent utilities including, but not limited to, sewer, electrical, phone, gas, water, and irrigation shall be paid for by City. Contractor shall be responsible for arranging the payment of such fees, but inspection fees and other municipal fees relating to permanent utilities shall be paid by City. Contractor may either request reimbursement from City for such fees, or shall be responsible for arranging and coordination with City for the payment of such fees.

ARTICLE 17. TRENCHES

a. Trenches Five Feet or More in Depth. The Contractor shall submit to City, in advance of excavation, a detailed plan showing the design of shoring, bracing, sloping or other provisions to be made for worker protection from the hazard of caving ground during the excavation of any trench or trenches five feet or more in depth. If the plan varies from shoring system standards, the plan shall be prepared by a registered civil or structural engineer. The plan shall not be less effective than the shoring, bracing, sloping, or other provisions of the Construction Safety Orders, as defined in the California Code of Regulations.

b. Excavations Deeper than Four Feet. If work under this Contract involves digging trenches or other excavation that extends deeper than four feet below the surface, Contractor shall promptly, and before the following conditions are disturbed, notify City, in writing, of any:

1) Material that the Contractor believes may be material that is hazardous waste, as defined in Section 25117 of the Health and Safety Code, that is required to be removed to a Class I, Class II, or Class III disposal site in accordance with provisions of existing law.

2) Subsurface or latent physical conditions at the site differing from those indicated.

3) Unknown physical conditions at the site of any unusual nature, different materially from those ordinarily encountered and generally recognized as inherent in work of the character provided for in the Contract.

City shall promptly investigate the conditions, and if it finds that the conditions do so materially differ, or do involve hazardous waste, and cause a decrease or increase in

Contractor's cost of, or the time required for, performance of any part of The Work, shall issue a change order under the procedures described in the Contract Documents.

In the event that a dispute arises between City and the Contractor as to whether the conditions materially differ, or involve hazardous waste, or cause a decrease or increase in the Contractor's cost of, or time required for, performance of any part of The Work, the Contractor shall not be excused from any scheduled completion date provided for by the Contract, but shall proceed with all Work to be performed under the Contract. Contractor shall retain any and all rights provided either by contract or by law which pertain to the resolution of disputes and protests between the parties.

ARTICLE 18. DIVERSION OF RECYCLABLE WASTE MATERIALS

In compliance with the applicable City's waste reduction and recycling efforts, Contractor shall divert all Recyclable Waste Materials to appropriate recycling centers. Contractor will be required to submit weight tickets and written proof of diversion with its monthly progress payment requests. Contractor shall complete and execute any certification forms required by City or other applicable agencies to document Contractor's compliance with these diversion requirements. All costs incurred for these waste diversion efforts shall be the responsibility of the Contractor.

ARTICLE 19. REMOVAL OF HAZARDOUS MATERIALS

Should Contractor encounter material reasonably believed to be polychlorinated biphenyl (PCB) or other toxic wastes and hazardous materials which have not been rendered harmless at the Project site, the Contractor shall immediately stop work at the affected Project site and shall report the condition to City in writing. City shall contract for any services required to directly remove and/or abate PCBs and other toxic wastes and hazardous materials, if required by the Project site(s), and shall not require the Contractor to subcontract for such services. The Work in the affected area shall not thereafter be resumed except by written agreement of City and Contractor.

ARTICLE 20. SANITARY FACILITIES

Contractor shall provide sanitary temporary toilet buildings for the use of all workers. All toilets shall comply with local codes and ordinances. Toilets shall be kept supplied with toilet paper and shall have workable door fasteners. Toilets shall be serviced no less than once weekly and shall be present in a quantity of not less than 1 per 20 workers as required by CAL-OSHA regulation. The toilets shall be maintained in a sanitary condition at all times. Use of toilet facilities in The Work under construction shall not be permitted. Any other Sanitary Facilities required by CAL-OSHA shall be the responsibility of the Contractor.

ARTICLE 21. AIR POLLUTION CONTROL

Contractor shall comply with all air pollution control rules, regulations, ordinances and statutes. All containers of paint, thinner, curing compound, solvent or liquid asphalt shall be labeled to indicate that the contents fully comply with the applicable material requirements.

Without limiting the foregoing, Contractor must fully comply with all applicable laws, rules and regulations in furnishing or using equipment and/or providing services, including, but not limited to, emissions limits and permitting requirements imposed by the South Coast Air Quality Management District (SCAQMD) and/or California Air Resources Board (CARB). Although the SCAQMD and CARB limits and requirements are more broad, Contractor shall specifically be aware of their application to "portable equipment", which definition is considered by SCAQMD and CARB to include any item of equipment with a fuel-powered engine. Contractor shall indemnify City against any fines or penalties imposed by SCAQMD, CARB, or any other governmental or regulatory agency for violations of applicable laws, rules and/or regulations by Contractor, its subcontractors, or others for whom Contractor is responsible under its indemnity obligations provided for in Article 50.

ARTICLE 22. WATER QUALITY MANAGEMENT AND COMPLIANCE

a. Storm, surface, ground, nuisance, or other waters may be encountered at various times during the Work. Contractor hereby acknowledges that it has investigated the risk arising from such waters, has prepared its Bid accordingly, and assumes any and all risks and liabilities arising therefrom.

b. b. Contractor shall keep itself and all subcontractors, staff, and employees fully informed of and in compliance with all local, state and federal laws, rules and regulations that may impact, or be implicated by the performance of the Work including, without limitation, all applicable provisions of the City's ordinances regulating discharges of storm water; the Federal Water Pollution Control Act (33 U.S.C. § 1251 et seq.); the California Porter-Cologne Water Quality Control Act (Water Code § 13000 et seq.); and any and all regulations, policies, or permits issued pursuant to any such authority. These include, but are not limited to California Regional Water Quality Control Boards (Santa Ana and San Diego Regions) Order No. R8-2009-0030 (NPDES Permit No. CAS 618030), Order No. R9-2009-0002, Order No. R8-2009-0045, Order No. R9-2013-0001 as amended by Order Nos. R9-2015-0001 and R9-2015-0100, and State Water Resources Control Board Order No. 2010-0014-DWQ, Order No. 2009-0009-DWQ, and Order No. 2012-0006-DWQ, and any amendment or renewal thereof.

c. Contractor shall comply with the lawful requirements of the City, and any other municipality, drainage district, or other local agency with jurisdiction over the location where the Work is to be conducted, regarding discharges of storm water to separate storm drain systems or watercourses. These requirements include but are not limited to, all applicable requirements of the Orange County Drainage Area Management Plan ("DAMP"), the City of Lake Forest Local Implementation Plan ("LIP"), and the applicable Water Quality Management Plan ("WQMP"). Sections 5, 7, and 8 of the DAMP contain requirements related to design and construction of public projects. Contractor shall be familiar the DAMP, and the LIP and shall comply with the requirements as specified therein. In the event the DAMP and LIP are revised or replaced in accordance with the requirements of a state or federal law, rule or permit that impacts the performance of the Work, Contractor shall comply with the revised or replaced requirements.

A copy of the DAMP is available on the internet at:

https://media.ocgov.com/gov/pw/watersheds/documents/damp/default.asp

A copy of the LIP is available on the internet at:

http://www.lakeforestca.gov/depts/pw/water/local_implementation_plan_%28lip%29.asp

More information on the applicable WQMP is available on the internet at:

http://www.lakeforestca.gov/depts/pw/water/water_quality_management_plan_(wqmp).asp

d. Contractor shall be required to comply with all aspects of the State Water Resources Control Board ("State Board") Water Quality Order No. 2009-0009-DWQ, National Pollutant Discharge Elimination System General Permit for Storm Water Discharges Associated with Construction Activity, including any amendment or renewal thereof, ("Construction General Permit") for all projects that involve construction on or disturbance of one acre or more of land or which are part of a larger common area of development.

e. City may require Contractor to file the Notice of Intent ("NOI") and obtain coverage for the Project under the Construction General Permit. This may include filing all necessary documentation including the Permit Registration Documents ("PRDs") through the Stormwater Multiple Applications and Report Tracking System ("SMARTS"); preparing and implementing a Storm Water Pollution Prevention Plan ("SWPPP") for the Work site; implementing all other provisions, and monitoring and reporting requirements required by the Construction General Permit; and providing a Qualified SWPPP Developer ("QSD") and Qualified SWPPP Practitioner

("QSP"), as necessary for all Work site activities, including but not limited to preparation and submittal of all reports, plans, inspections, and monitoring information in compliance with the Construction General Permit. City retains the right to develop its own documentation for the project site, including but not limited to the SWPPP, and in the alternative may require Contractor to adopt and implement portions of the City developed SWPPP. Specific requirements for the Work site shall be set forth in the Special Conditions. Contractor shall include all costs of compliance with specified requirements in the Contract amount.

f. For those Work sites where construction activity results in the disturbance of less than one acre of total land area and/or do not need coverage under the Construction General Permit, the Contractor shall be responsible for preparing and implementing an Erosion and Sediment Control Plan in accordance with California Regional Water Quality Control Board Order No. R8-2009-0030, Order No. R9-2013-0001 as amended by Order Nos. R9-2015-0001 and R9-2015-0100 and any amendment or renewal thereof, and the City's LIP and Orange County DAMP and any revision or replacement thereof.

g. Notwithstanding the above, before any PRDs, SWPPP, or other Construction General Permit related document may be submitted to the State Water Resources Control Board or implemented on the Work site, it must first be reviewed and approved by the City and/or the City's designee. The City expressly reserves the right to procure coverage under the Construction General Permit for the Work site if Contractor fails to draft satisfactory PRDs or SWPPP or otherwise fails to proceed in a manner that complies with the requirements of the Construction General Permit. The City additionally reserves the right to hire additional contractors to maintain compliance at the Work site. Whether Contractor has adequately maintained compliance with the Construction General Permit shall be the City's sole determination. Any costs incurred by the City in procuring coverage under the Construction General Permit, or drafting and/or implementing a SWPPP for the Work site shall be paid by Contractor.

h. Failure to comply with laws, regulations, and ordinances listed in this Article 22 is a violation of federal and state law. Notwithstanding any other indemnity contained in this Agreement, Contractor agrees to indemnify and hold harmless the City, its officials, officers, agents, employees and authorized volunteers from and against any and all claims, demands, losses or liabilities of any kind or nature which the City, its officials, officers, agents, employees and authorized volunteers may sustain or incur for noncompliance with the laws, regulations, and ordinances listed above, arising out of or in connection with the Work, except for liability

resulting from the sole established negligence, willful misconduct or active negligence of the City, its officials, officers, agents, employees or authorized volunteers.

i. City reserves the right to defend any enforcement action or civil action brought against the City for Contractor's failure to comply with any applicable water quality law, regulation, or policy. Contractor hereby agrees to be bound by, and to reimburse the City for the costs associated with, any enforcement action and/or settlement reached between the City and any relevant enforcement entity.

j. City may seek damages from Contractor for delay in completing the Work in accordance with the Contract Documents, caused by Contractor's failure to comply with the laws, regulations and policies described in this Article 22, or any other relevant water quality law, regulation, or policy.

ARTICLE 23. CLEANING UP

a. Contractor at all times shall keep premises free from debris such as waste, rubbish, and excess materials and equipment. Contractor shall not store debris under, in, or about the premises. Upon completion of Work, Contractor shall clean the interior and exterior of the building or improvement including fixtures, equipment, walls, floors, ceilings, roofs, window sills and ledges, horizontal projections, and any areas where debris has collected so surfaces are free from foreign material or discoloration. Contractor shall clean and polish all glass, plumbing fixtures, and finish hardware and similar finish surfaces and equipment and contractor shall also remove temporary fencing, barricades, planking and construction toilet and similar temporary facilities from site. Contractor shall also clean all buildings, asphalt and concrete areas to the degree necessary to remove oil, grease, fuel, or other stains caused by Contractor operations or equipment.

b. Contractor shall fully clean up the site at the completion of The Work. If the Contractor fails to immediately clean up at the completion of The Work, City may do so and the cost of such clean up shall be charged back to the Contractor.

ARTICLE 24. LAYOUT AND FIELD ENGINEERING

All field engineering required for laying out The Work and establishing grades for earthwork operations, location and alignment of any and all site elements (buildings, paving, walks, fencing, furnishings, etc.) shall be furnished by the Contractor at its expense. A digital AutoCAD (version 2011) file shall be provided to the Contractor by the City indicating the location and layout of all site elements for the use by the Contractors surveyor. Layout shall be done by a registered civil engineer or a licensed

land surveyor Approved by the Engineer. Any surveying necessary to establish the grade and line of the work is to be done by a properly licensed land surveyor retained by the contractor. Any required "as-built" drawings of the Work shall be prepared by the registered civil engineer.

ARTICLE 25. EXCESSIVE NOISE

a. The Contractor shall use only such equipment on the work and in such state of repair so that the emission of sound therefrom is within the noise tolerance level of that equipment as established by CAL-OSHA.

b. The Contractor shall comply with the most restrictive of the following: (1) local sound control and noise level rules, regulations and ordinances and (2) the requirements contained in these Contract Documents, including hours of operation requirements. No internal combustion engine shall be operated on the Project without a muffler of the type recommended by the manufacturer. Should any muffler or other control device sustain damage or be determined to be ineffective or defective, the Contractor shall promptly remove the equipment and shall not return said equipment to the job until the device is repaired or replaced. Said noise and vibration level requirements shall apply to all equipment on the job or related to the job, including but not limited to, trucks, transit mixers or transit equipment that may or may not be owned by the Contractor.

ARTICLE 26. TESTS AND INSPECTIONS

a. If the Contract Documents, the Engineer, or any instructions, laws, ordinances, or public authority require any part of The Work to be tested or Approved, Contractor shall provide the Engineer at least two (2) working days notice of its readiness for observation or inspection. If inspection is by a public authority other than City, Contractor shall promptly inform City of the date fixed for such inspection. Required certificates of inspection (or similar) shall be secured by Contractor. Costs for City testing and City inspection shall be paid by City. Costs of tests for Work found not to be in compliance shall be paid by the Contractor.

b. If any Work is done or covered up without the required testing or approval, the Contractor shall uncover or deconstruct the Work, and the Work shall be redone after completion of the testing at the Contractor's cost in compliance with the Contract Documents.

c. Where inspection and testing are to be conducted by an independent laboratory or agency, materials or samples of materials to be inspected or tested shall be selected by such laboratory or agency, or by City, and not by Contractor. All tests or inspections of materials shall be made in

accordance with the commonly recognized standards of national organizations.

d. In advance of manufacture of materials to be supplied by Contractor which must be tested or inspected, Contractor shall notify City so that City may arrange for testing at the source of supply. Any materials which have not satisfactorily passed such testing and inspection shall not be incorporated into The Work.

e. If the manufacture of materials to be inspected or tested will occur in a plant or location outside the geographic limits of City, the Contractor shall pay for any excessive or unusual costs associated with such testing or inspection, including but not limited to excessive travel time, standby time and required lodging.

f. Reexamination of Work may be ordered by City. If so ordered, Work must be uncovered or deconstructed by Contractor. If Work is found to be in accordance with the Contract Documents, City shall pay the costs of reexamination and reconstruction. If such work is found not to be in accordance with the Contract Documents, Contractor shall pay all costs.

ARTICLE 27. PROTECTION OF WORK AND PROPERTY

a. The Contractor shall be responsible for all damages to persons or property that occur as a result of The Work. Contractor shall be responsible for the proper care and protection of all materials delivered and Work performed until completion and final Acceptance by City. All Work shall be solely at the Contractor's risk. Contractor shall adequately protect adjacent property from settlement or loss of lateral support as necessary. Contractor shall comply with all applicable safety laws and building codes to prevent accidents or injury to persons on, about, or adjacent to the Project site where Work is being performed. Contractor shall erect and properly maintain at all times, as required by field conditions and progress of work, all necessary safeguards, signs, barriers, lights, and watchmen for protection of workers and the public, and shall post danger signs warning against hazards created in the course of construction.

b. In an emergency affecting safety of life or of work or of adjoining property, Contractor, without special instruction or authorization from the Engineer, is hereby permitted to act to prevent such threatened loss or injury; and Contractor shall so act, without appeal, if so authorized or instructed by the Engineer or City. Any compensation claimed by Contractor on account of emergency work shall be determined by and agreed upon by City and the Contractor.

c. Contractor shall provide such heat, covering, and enclosures as are necessary to protect all Work, materials, equipment, appliances, and tools against damage by weather conditions.

d. Contractor shall take adequate precautions to protect existing sidewalks, curbs, pavements, utilities, and other adjoining property and structures, and to avoid damage thereto, and Contractor shall repair any damage thereto caused by The Work operations. Contractor shall:

1) Enclose the working area with a substantial barricade, and arrange work to cause minimum amount of inconvenience and danger to the public.

2) Provide substantial barricades around any shrubs or trees indicated to be preserved.

3) Deliver materials to the Project site over a route designated by the Engineer.

4) Provide any and all dust control required and follow the Applicable air quality regulations as appropriate. If the Contractor does not comply, City shall have the immediate authority to provide dust control and deduct the cost from payments to the Contractor.

5) Confine Contractor's apparatus, the storage of materials, and the operations of its workers to limits required by law, ordinances, permits, or directions of the Engineer. Contractor shall not unreasonably encumber the Project site with its materials.

6) Take care to prevent disturbing or covering any survey markers, monuments, or other devices marking property boundaries or corners. If such markers are disturbed by accident, they shall be replaced by an approved civil engineer or land surveyor, at no cost to City.

7) Ensure that existing facilities, fences and other structures are all adequately protected and that, upon completion of all Work, all facilities that may have been damaged are restored to a condition acceptable to City.

8) Preserve and protect from injury all buildings, pole lines and all direction, warning and mileage signs that have been placed within the right-of-way.

9) At the completion of work each day, leave the Project site in a clean, safe condition.

10) Comply with any stage construction and traffic handling plans. Access to residences and businesses shall be maintained at all times.

e. These precautionary measures will apply continuously and not be limited to normal working hours. Full compensation for the Work involved in the preservation of life, safety and property as above specified shall be considered as included in the prices paid for the various contract items of Work, and no additional allowance will be made therefor.

f. Should damage to persons or property occur as a result of The Work, Contractor shall be responsible for proper investigation, documentation, including video or photography, to adequately memorialize and make a record of what transpired. City shall be entitled to inspect and copy any such documentation, video, or photographs.

ARTICLE 28. CONTRACTORS MEANS AND METHODS

Contractor is solely responsible for the means and methods utilized to Perform The Work. In no case shall the Contractor's means and methods deviate from commonly used industry standards.

ARTICLE 29. AUTHORIZED REPRESENTATIVES

City shall designate representatives, who shall have the right to be present at the Project site at all times. City may designate an inspector who shall have the right to observe all of the Contractor's Work. The inspector is not authorized to make changes in the Contract Documents. The inspector shall not be responsible for the Contractor's failure to carry out The Work in accordance with the Contract Documents. Contractor shall provide safe and proper facilities for such access.

ARTICLE 30. HOURS OF WORK

a. Eight (8) hours of work shall constitute a legal day's work. The Contractor and each subcontractor shall forfeit, as penalty to City, twenty-five dollars ($25) for each worker employed in the execution of Work by the Contractor or any subcontractor for each day during which such worker is required or permitted to work more than eight (8) hours in any one day and forty (40) hours in any week in violation of the provisions of the Labor Code, and in particular, Section 1810 to Section 1815, except as provided in Labor Code Section 1815.

b. Unless otherwise provided in the Special Conditions, Work shall be accomplished on a regularly scheduled eight (8) hour per day work shift basis, Monday through Friday, between the hours of 7:00 a.m. and 5:00 p.m.

c. It shall be unlawful for any person to operate, permit, use, or cause to operate any of the following at the Project site, other than between the hours of 7:00 a.m. to 5:00 p.m., Monday through Friday, with no Work allowed on City-observed holidays, unless otherwise Approved by the Engineer:

1) Powered Vehicles

2) Construction Equipment

3) Loading and Unloading Vehicles

4) Domestic Power Tool.

ARTICLE 31. PAYROLL RECORDS

a. Pursuant to Labor Code Section 1776, the Contractor and each subcontractor shall maintain weekly certified payroll records showing the name, address, social security number, work classification, straight time and overtime hours paid each day and week, and the actual per diem wages paid to each journeyman, apprentice, worker or other employee employed in connection with the work. Contractor shall certify under penalty of perjury that records maintained and submitted by Contractor are true and accurate. Contractor shall also require subcontractor(s) to certify weekly payroll records under penalty of perjury.

b. In accordance with Labor Code section 1771.4, the Contractor and each subcontractor shall furnish the certified payroll records directly to the Department of Industrial Relations ("DIR") on a weekly basis and in the format prescribed by the DIR, which may include electronic submission. Contractor shall comply with all requirements and regulations from the DIR relating to labor compliance monitoring and enforcement.

c. The payroll records described herein shall be certified and submitted by the Contractor at a time designated by City. The Contractor shall also provide the following:

1) A certified copy of the employee's payroll records shall be made available for inspection or furnished to such employee or his or her authorized representative on request.

2) A certified copy of all payroll records described herein shall be made available for inspection or furnished upon request of the Department of Industrial Relations ("DIR").

d. The certified payroll records shall be on forms provided by the Division of Labor Standards Enforcement ("DLSE") of the DIR or shall contain the same information as the forms provided by the DLSE.

e. Any copy of records made available for inspection and furnished upon request to the public shall be marked or obliterated in such a manner as to prevent disclosure of an individual's name, address, and social security number. The name and address of the Contractor or any subcontractor shall not be marked or obliterated.

f. In the event of noncompliance with the requirements of this Section, the Contractor shall have ten (10) days in which to comply subsequent to receipt of written notice specifying any item or actions necessary to ensure compliance with this section. Should noncompliance still be evident after such ten (10) day period, the Contractor shall, as a penalty to City, forfeit one hundred dollars ($100.00) for each day, or portion thereof, for each worker until strict compliance is effectuated. Upon the request of the DIR, such penalties shall be withheld from contract payments.

ARTICLE 32. PREVAILING RATES OF WAGES

a. The Contractor is aware of the requirements of Labor Code Sections 1720 et seq. and 1770 et seq., as well as California Code of Regulations, Title 8, Section 16000 et seq. ("Prevailing Wage Laws"), which require the payment of prevailing wage rates and the performance of other requirements on certain "public works" and "maintenance" projects. Since this Project involves an applicable "public works" or "maintenance" project, as defined by the Prevailing Wage Laws, and since the total compensation is $1,000 or more, Contractor agrees to fully comply with such Prevailing Wage Laws. The Contractor shall obtain a copy of the prevailing rates of per diem wages at the commencement of this Agreement from the website of the Division of Labor Statistics and Research of the Department of Industrial Relations located at www.dir.ca.gov/dlsr/. In the alternative, the Contractor may view a copy of the prevailing rates of per diem wages at City. Contractor shall make copies of the prevailing rates of per diem wages for each craft, classification or type of worker needed to perform work on the Project available to interested parties upon request, and shall post copies at the Contractor's principal place of business and at the Project site. Contractor shall defend, indemnify and hold City, its elected officials, officers, employees and agents free and harmless from any claims, liabilities, costs, penalties or interest arising out of any failure or allege failure to comply with the Prevailing Wage Laws.

b. The Contractor and each subcontractor shall forfeit as a penalty to City not more than two hundred dollars ($200) for each calendar day, or portion thereof, for each worker paid less than the stipulated prevailing wage rate

for any work done by him, or by any subcontract under him, in violation of the provisions of the Labor Code. The difference between such stipulated prevailing wage rate and the amount paid to each worker for each calendar day or portion thereof for which each worker was paid less than the stipulated prevailing wage rate shall be paid to each worker by the Contractor.

c. Contractor shall post, at appropriate conspicuous points on the Project site, a schedule showing all determined general prevailing wage rates and all authorized deductions, if any, from unpaid wages actually earned.

ARTICLE 33. EMPLOYMENT OF APPRENTICES

The Contractor's attention is directed to the provisions of Sections 1777.5, 1777.6, and 1777.7 of the Labor Code concerning employment of apprentices by the Contractor or any subcontractor. The Contractor shall obtain a certificate of apprenticeship before employing any apprentice pursuant to Section 1777.5, 1777.6, and 1777.7 of the Labor Code. Information relative to apprenticeship standards, wage schedules, and other requirements may be obtained from the Director of Industrial Relations, the Administrator of Apprenticeships, San Francisco, California, or from the Division of Apprenticeship Standards and its branch offices.

ARTICLE 34. NONDISCRIMINATION/EQUAL EMPLOYMENT OPPORTUNITY

Pursuant to Labor Code Section 1735 and other applicable provisions of law, the Contractor and its subcontractors shall not discriminate against any employee or applicant for employment because of race, color, religion, sex, national origin, age, political affiliation, marital status, or handicap on this Project. The Contractor will take affirmative action to insure that employees are treated during employment or training without regard to their race, color, religion, sex, national origin, age, political affiliation, marital status, or handicap.

ARTICLE 35. LABOR/EMPLOYMENT SAFETY

The Contractor shall maintain emergency first aid treatment for his employees which complies with the Federal Occupational Safety and Health Act of 1970 (29 U.S.C. § 651 et seq.), and California Code of Regulations, Title 8, Industrial Relations Division 1, Department of Industrial Relations, Chapter 4.

ARTICLE 36. INSURANCE

Contractor agrees to procure and maintain, at Contractor's expense all insurance specified in Appendix "1" attached hereto and by this reference incorporated herein. Contractor shall require all subcontractors to carry the same policies and limits of insurance that the Contractor is required to maintain, unless otherwise approved in writing by the City.

ARTICLE 37. TIME FOR COMPLETION AND LIQUIDATED DAMAGES

a. Time for Completion/Liquidated Damages. Work shall be commenced within ten (10) days of the date stated in City's Notice to Proceed and shall be completed by Contractor in the time specified in the Contract Documents. City is under no obligation to consider early completion of the Project; and the Contract completion date shall not be amended by City's receipt or acceptance of the Contractor's proposed earlier completion date. Furthermore, Contractor shall not, under any circumstances, receive additional compensation from City (including but not limited to indirect, general, administrative or other forms of overhead costs) for the period between the time of earlier completion proposed by the Contractor and the Contract completion date. If The Work is not completed as stated in the Contract Documents, it is understood that City will suffer damage. In accordance with Government Code section 53069.85, being impractical and infeasible to determine the amount of actual damage, it is agreed that Contractor shall pay to City as fixed and liquidated damages, and not as a penalty, the sum stipulated in the Contract for each day of delay until The Work is fully completed. Contractor and its surety shall be liable for any liquidated damages. Any money due or to become due the Contractor may be retained to cover liquidated damages.

b. Inclement Weather. Contractor shall abide the Engineer's determination of what constitutes inclement weather. Time extensions for inclement weather shall only be granted when the Work stopped during inclement weather is on the critical path of the Project schedule.

c. Extension of Time. Contractor shall not be charged liquidated damages because of any delays in completion of The Work due to unforeseeable causes beyond the control and without the fault or negligence of Contractor (or its subcontractors or suppliers). Contractor shall within five (5) Days of identifying any such delay notify City in writing of causes of delay. City shall ascertain the facts and extent of delay and grant extension of time for completing The Work when, in its judgment, the facts justify such an extension. Time extensions to the Project shall be requested by the Contractor as they occur and without delay. No delay claims shall be permitted unless the event or occurrence delays the completion of the Project beyond the Contract completion date.

d. No Damages for Reasonable Delay. City's liability to Contractor for delays for which City is responsible shall be limited to only an extension of time unless such delays were unreasonable under the circumstances. In no case shall City be liable for any costs which are borne by the Contractor in the regular course of business, including, but not limited to, home office overhead and other ongoing costs. Damages caused by unreasonable

City delay, including delays caused by items that are the responsibility of City pursuant to Government Code section 4215, shall be based on actual costs only, no proportions or formulas shall be used to calculate any delay damages.

ARTICLE 38. COST BREAKDOWN AND PERIODIC ESTIMATES

Contractor shall furnish on forms Approved by City:

a. Within ten (10) Days of award of the Contract a detailed estimate giving a complete breakdown of the Contract price;

b. A monthly itemized estimate of Work done for the purpose of making progress payments. In order for City to consider and evaluate each progress payment application, the Contractor shall submit a detailed measurement of Work performed and a progress estimate of the value thereof before the tenth (10th) Day of the following month.

c. Contractor shall submit, with each of its payment requests, an adjusted list of actual quantities, verified by the Engineer, for unit price items listed, if any, in the Bid Form.

d. Following City's Acceptance of the Work, the Contractor shall submit to City a written statement of the final quantities of unit price items for inclusion in the final payment request.

e. City shall have the right to adjust any estimate of quantity and to subsequently correct any error made in any estimate for payment.

Contractor shall certify under penalty of perjury, that all cost breakdowns and periodic estimates accurately reflect the Work on the Project.

ARTICLE 39. MOBILIZATION/DEMOBILIZATION

a. When a bid item is included in the Bid Form for mobilization/demobilization, the costs of Work in advance of construction operations and not directly attributable to any specific bid item will be included in the progress estimate ("Initial Mobilization/Final Demobilization"). When no bid item is provided for "Initial Mobilization," payment for such costs will be deemed to be included in the other items of The Work.

b. Payment for mobilization/ demobilization **shall not exceed 5% of the CONTRACTOR'S total Contract price, before adding MOBILIZATION/ DEMOLIZATION to the total Contract Price**. At the beginning of the contract, 50% of the Bid Item shall be paid for mobilization required to

complete the work as set forth in the Contract Document. After 100% of the contract is completed including execution of the maintenance period for landscape and irrigation improvements, the other, remaining 50% of the Bid Item shall be paid for Demobilization. The CITY will not release the Demobilization portion of this bid item until the CITY has accepted all of the improvements included with this Contract. No additional compensation will be allowed.

c. The scope of the Work included under Mobilization/Demobilization shall include, but shall not be limited to, the following principal items:

1) Obtaining and paying for all bonds, insurance, and permits.

2) Moving on to the Project site of all Contractor's plant and equipment required for first month's operations and moving off site at the completion of the project

3) Installation & removal temporary construction power, wiring, and lighting facilities.

4) Installation & removal of temporary construction fencing with gates and locks for site security.

5) Establishing fire protection system.

6) Developing and installing a construction water supply and removing the construction water supply at the completion of the project.

7) Providing on-site sanitary facilities and potable water facilities as specified per Cal-OSHA and these Contract Documents.

8) Furnishing, installing, and maintaining all storage buildings or sheds required for temporary storage of products, equipment, or materials that have not yet been installed in the Work. All such storage shall meet manufacturer's specified storage requirements, and the specific provisions of the specifications, including temperature and humidity control, if recommended by the manufacturer, and for all security.

9) Arranging for and erection of Contractor's work and storage yard.

10) Posting all OSHA required notices and establishment of safety programs per Cal-OSHA.

11) Full-time presence of Contractor's superintendent at the job site as required herein.

12) Submittal of Construction Schedule as required by the Contract Documents.

ARTICLE 40. PAYMENTS

a. City shall make monthly progress payments following receipt of undisputed and properly submitted payment requests. Contractor shall be paid a sum equal to ninety-five percent (95%) of the value of Work performed up to the last day of the previous month, less the aggregate of previous payments, except where the City has adopted a finding that the Work done under the Contract is substantially complex, and then the Contractor shall be paid a sum equal to ninety percent (90%) of the value of the Work performed up to the last day of the previous month, less the aggregate of previous payments.

b. The Contractor shall, after the full completion of The Work, submit a final payment application. All prior progress estimates shall be subject to correction in the final estimate and payment.

c. Unless otherwise required by law, the final payment of five percent (5%) of the value of the Work (or ten percent (10%) in the event the City has adopted a finding that the Work under the Contract is substantially complex), if unencumbered, shall be paid no later than sixty (60) Days after the date of recordation of the Notice of Completion.

d. Acceptance by Contractor of the final payment shall constitute a waiver of all claims against City arising from this Contract.

e. Payments to the Contractor shall not be construed to be an acceptance of any defective work or improper materials, or to relieve the Contractor of its obligations under the Contract Documents.

f. The Contractor shall submit with each payment request the Contractor's conditional waiver of lien for the entire amount covered by such payment request, as well as a valid unconditional waiver of lien from the Contractor and all subcontractors and materialmen for all work and materials included in any prior invoices. Waivers of lien shall be in the forms prescribed by California Civil Code Section 8132. Prior to final payment by City, the Contractor shall submit a final waiver of lien for the Contractor's work, together with releases of lien from any subcontractor or materialmen.

ARTICLE 41. PAYMENTS WITHHELD AND BACKCHARGES

a. In addition to amounts which City may retain under other provisions of the Contract Documents City may withhold payments due to Contractor as may be necessary to cover:

1) Stop Notice Claims.

2) Defective work not remedied.

3) Failure of Contractor to make proper payments to its subcontractors or suppliers.

4) Completion of the Contract if there exists a reasonable doubt that the work can be completed for balance then unpaid.

5) Damage to another contractor or third party.

6) Amounts which may be due City for claims against Contractor.

7) Failure of Contractor to keep the record ("as-built") drawings up to date.

8) Failure to provide updates on the construction schedule.

9) Site clean up.

10) Failure of the Contractor to comply with requirements of the Contract Documents.

11) Liquated damages.

12) Legally permitted penalties.

b. Upon completion of the Contract, City will reduce the final Contract amount to reflect costs charged to the Contractor, backcharges or payments withheld pursuant to the Contract Documents.

ARTICLE 42. CHANGES AND EXTRA WORK

a. Change Order Work.

1) City, without invalidating the Contract, may order changes in the Work consisting of additions, deletions or other revisions, the Contract amount and Contract time being adjusted accordingly. All such changes in the Work shall be authorized by Change Order, shall be performed under the applicable conditions of the Contract Documents, and shall be subject to the approval authority requirements of Article 4 of the Contract. A Change Order signed by the Contractor indicates the Contractor's agreement therewith, including any adjustment in the Contract amount or the Contract time, and the full and final settlement of all costs (direct, indirect

and overhead) related to the Work authorized by the Change Order.

2) All claims for additional compensation to the Contractor shall be presented in writing before the expense is incurred and will be adjusted as provided herein. No work shall be allowed to lag pending such adjustment, but shall be promptly executed as directed, even if a dispute arises. No claim will be considered after the work in question has been done unless a written contract change order has been issued or a timely written notice of claim has been made by Contractor. Contractor shall not be entitled to claim or bring suit for damages, whether for loss of profits or otherwise, on account of any decrease or omission of any item or portion of Work to be done. Whenever any change is made as provided for herein, such change shall be considered and treated as though originally included in the Contract, and shall be subject to all terms, conditions and provisions of the original Contract.

3) Owner Initiated Change. The Contractor must submit a complete cost proposal, including any change in the Contract time, within seven (7) Days after receipt of a scope of a proposed change order, unless City requests that proposals be submitted in less than seven (7) Days.

4) Contractor Initiated Change. The Contractor must give written notice of a proposed change order required for compliance with the Contract Documents within seven (7) Days of discovery of the facts giving rise to the proposed change order.

5) Whenever possible, any changes to the Contract amount shall be in a lump sum mutually agreed to by the Contractor and City.

6) Price quotations from the Contractor shall be accompanied by sufficiently detailed supporting documentation to permit verification by City.

7) If the Contractor fails to submit the cost proposal within the seven (7) Day period (or as requested), City has the right to order the Contractor in writing to commence the work immediately on a force account basis and/or issue a lump sum change to the contract price in accordance with City's estimate of cost. If the change is issued based on City estimate, the Contractor will waive its right to dispute the action unless within fifteen (15) Days following completion of the added/deleted work, the Contractor presents written proof that City's estimate was in error.

8) Estimates for lump sum quotations and accounting for cost-plus-percentage work shall be limited to direct expenditures necessitated specifically by the subject extra work, and shall be segregated as follows:

(a) Labor. The costs of labor will be the actual cost for wages prevailing locally for each craft or type of worker at the time the extra work is done, plus employer payments of payroll taxes and insurance, health and welfare, pension, vacation, apprenticeship funds, and other direct costs resulting from Federal, State or local laws, as well as assessment or benefits required by lawful collective bargaining agreements. The use of a labor classification which would increase the extra work cost will not be permitted unless the contractor establishes the necessity for such additional costs. Labor costs for equipment operators and helpers shall be reported only when such costs are not included in the invoice for equipment rental.

(b) Materials. The cost of materials reported shall be at invoice or lowest current price at which such materials are locally available in the quantities involved, plus sales tax, freight and delivery. Materials cost shall be based upon supplier or manufacturer's invoice. If invoices or other satisfactory evidence of cost are not furnished within fifteen (15) Days of delivery, then the Engineer shall determine the materials cost, at its sole discretion.

(c) Tool and Equipment Use. No payment will be made for the use of small tools, tools which have a replacement value of $1,000 or less. Regardless of ownership, the rates to be used in determining equipment use costs shall not exceed listed rates prevailing locally at equipment rental agencies, or distributors, or Caltrans Equipment Rental Rates (without surcharge) at the time the work is performed.

(d) Overhead, Profit and Other Charges. The mark-up for overhead (including supervision) and profit on work added to the Contract shall be according to the following:

i. "Net Cost" is defined as consisting of costs of labor, materials and tools and equipment only excluding overhead and profit. The costs of applicable insurance and bond premium will be reimbursed to the Contractor and subcontractors at cost only, without mark-up.

ii. For Work performed by the Contractor's forces the added cost for overhead and profit shall not exceed fifteen percent (15%) of the Net Cost of the Work.

iii. For Work performed by a subcontractor, the added cost for overhead and profit shall not exceed fifteen percent (15%) of the Net Cost of the Work to which the Contractor may add five percent (5%) of the subcontractor's Net Cost.

iv. For Work performed by a sub-subcontractor the added cost for overhead and profit shall not exceed fifteen percent (15%) of the Net Cost for Work to which the subcontractor and general contractor may each add an additional five percent (5%) of the Net Cost of the lower tier subcontractor.

v. No additional mark up will be allowed for lower tier subcontractors, and in no case shall the added cost for overhead and profit payable by City exceed twenty-five percent (25%) of the Net Cost as defined herein.

9) All of the following costs are included in the markups for overhead and profit described above, and Contractor shall not receive any additional compensation for: Submittals, drawings: field drawings, Shop Drawings, including submissions of drawings; field inspection; General Superintendence; General administration and preparation of cost proposals, schedule analysis, Change Orders, and other supporting documentation; computer services; reproduction services; Salaries of project engineer, superintendent, timekeeper, storekeeper, and secretaries; Janitorial services; Small tools, incidentals and consumables; Temporary on Site facilities (Offices, Telephones, Internet access, Plumbing, Electrical Power, lighting; Platforms, Fencing, Water), Jobsite and Home office overhead or other expenses; vehicles and fuel used for work otherwise included in the Contract Documents; Surveying; Estimating; Protection of Work; Handling and disposal fees; Final cleanup; Other incidental Work; Related warranties.

10) For added or deducted Work by subcontractors, the Contractor shall furnish to City the subcontractor's signed detailed estimate of the cost of labor, material and equipment, including the subcontractor markup for overhead and profit. The same requirement shall apply to sub-subcontractors.

11) For added or deducted work furnished by a vendor or supplier, the Contractor shall furnish to City a detailed estimate or quotation of the cost to the Contractor, signed by such vendor or supplier.

12) Any change in The Work involving both additions and deletions shall indicate a net total cost, including subcontracts and materials. Allowance for overhead and profit, as specified herein, shall be applied if the net total cost is an extra; overhead and profit allowances shall not be applied if the net total cost is a credit. The estimated cost of deductions shall be based on labor and material prices on the date the Contract was executed.

13) Contractor shall not reserve a right to assert impact costs, extended job site costs, extended overhead, constructive acceleration and/or actual acceleration beyond what is stated in the change order for work. No claims shall be allowed for impact, extended overhead costs, constructive acceleration and/or actual acceleration due to a multiplicity of changes and/or clarifications. The Contractor may not change or modify City's change order form in an attempt to reserve additional rights.

14) If City disagrees with the proposal submitted by Contractor, it will notify the Contractor and City will provide its opinion of the appropriate price and/or time extension. If the Contractor agrees with City, a change order will be issued by City. If no agreement can be reached, City shall have the right to issue a unilateral change order setting forth its determination of the reasonable additions or savings in costs and time attributable to the extra or deleted work. Such determination shall become final and binding if the Contractor fails to submit a claim in writing to City within fifteen (15) Days of the issuance of the unilateral change order, disputing the terms of the unilateral change order.

15) No dispute, disagreement or failure of the parties to reach agreement on the terms of the change order shall relieve the Contractor from the obligation to proceed with performance of the work, including extra work, promptly and expeditiously.

16) Any alterations, extensions of time, extra work or any other changes may be made without securing consent of the Contractor's surety or sureties.

b. Contract Unit Prices

1) Increases more than twenty-five percent (25%) percent. Should the actual quantity of an item of work covered by a Contract Unit Price

and constructed in conformance with the Plans and Specifications exceed the Bid quantity by more than twenty-five percent (25%), payment for the quantity in excess of one hundred twenty-five percent (125%) of the Bid quantity will be made on the basis of an adjustment in the Contract Unit Price mutually agreed to by the Contractor and the City, or at the option of the Engineer, on the basis of the Extra Work per paragraph (a) above.

2) Decreases of more than twenty-five percent (25%). Should the actual quantity of an item of work covered by a Contract Unit Price, and constructed in conformance with Plans and Specifications, be less than seventy-five percent (75%) of the Bid quantity, an adjustment in payment will not be made unless so requested in writing by the Contractor. If the Contractor so requests, payment will be made on the basis of an adjustment in the Contract Unit Price mutually agreed to by the Contractor and the City, or at the option of the Engineer, on the basis of the Extra Work per paragraph (a) above; however, in no case will payment be less than would be made for the actual quantity at the Contract Unit Price nor more than would be made for seventy-five percent (75%) of the Bid quantity at the Contract Unit Price.

ARTICLE 43. OCCUPANCY

City reserves the right to occupy or utilize any portion of The Work at any time before completion, and such occupancy or use shall not constitute Acceptance of any part of Work covered by this Contract. This use shall not relieve the Contractor of its responsibilities under the Contract.

ARTICLE 44. INDEMNIFICATION

Contractor shall defend (with counsel of City Council's choosing), indemnify and hold City, its officials, officers, agents, employees, and representatives free and harmless from any and all claims, demands, causes of action, costs, expenses, liabilities, losses, damages or injuries, in law or equity, regardless of whether the allegations are false, fraudulent, or groundless, to property or persons, including wrongful death, to the extent arising out of or incident to any acts, omissions or willful misconduct of Contractor, its officials, officers, employees, agents, consultants and contractors arising out of or in connection with the performance of the Work or this Contract, including claims made by subcontractors for nonpayment, including without limitation the payment of all consequential damages and attorneys fees and other related costs and expenses. To the fullest extent permitted by law, Contractor shall defend, at Contractor's own cost, expense and risk, with City Council's choosing, any and all such aforesaid suits, actions or other legal proceedings of every kind that may be brought or instituted against City, its officials, officers, agents, employees and representatives. To the extent of its liability, Contractor shall pay and satisfy any judgment, award or decree that may be

rendered against City, its officials, officers, employees, agents, employees and representatives, in any such suit, action or other legal proceeding. Contractor shall reimburse City, its officials, officers, agents, employees and representatives for any and all legal expenses and costs incurred by each of them in connection therewith or in enforcing the indemnity herein provided. The only limitations on this provision shall be those imposed by Civil Code Section 2782.

ARTICLE 45. RECORD ("AS BUILT") DRAWINGS

a. Contractor shall prepare and maintain a complete set of record drawings (herein referred to as "as-builts") and shall require each trade to prepare its own as-builts. The as-builts must show the entire site for each major trade, including but not limited to water, sewer, electrical, data, telephone, cable, fire alarm, gas and plumbing. Contractor shall mark the as-builts to show the actual installation where the installation varies from the Work as originally shown. Contractor shall mark whichever drawings are most capable of showing conditions fully and where shop drawings are used, Contractor must record a cross-reference at the corresponding location on the contract drawings. Contractor shall give particular attention to concealed elements that would be difficult to measure and record at a later date. Contractor shall use colors to distinguish variations in separate categories of The Work.

b. Contractor shall note related change order, request for information , request for proposals, or Architect's Supplemental Instructions where applicable. Contractor shall organize as-builts into manageable sets, bound with durable paper cover sheets and shall print suitable title, dates and other identification on the cover of each set. Contractor to also provide an electronic version of the as-builts in .pdf or other approved format. The suitability of the as-builts will be determined by the Engineer.

ARTICLE 46. RESOLUTION OF CONSTRUCTION CLAIMS

a. In accordance with Public Contract Code Sections 20104 et seq. and other applicable law, public works claims of $375,000 or less which arise between the Contractor and City shall be resolved under the following procedure unless City has elected to resolve the dispute pursuant to Public Contract Code Section 10240 et seq.

b. <u>All Claims</u>. All claims shall be submitted in writing and accompanied by substantiating documentation. Claims must be filed on or before the date of final payment unless other notice requirements are provided in the contract. "Claim" means a separate demand by the Contractor for (1) a time extension, (2) payment of money or damages arising from work done by or on behalf of the Contractor and payment of which is not otherwise

expressly provided for or the Contractor is not otherwise entitled, or (3) an amount the payment of which is disputed by City.

c. Claims Under $50,000. City shall respond in writing to the claim within 45 days of receipt of the claim, or, City may request, in writing, within 30 days of receipt of the claim, any additional documentation supporting the claim or relating to defenses or claims City may have. If additional information is needed thereafter, it shall be provided upon mutual agreement of City and the Contractor. City's written response shall be submitted 15 days after receiving the additional documentation, or within the same period of time taken by the Contractor to produce the additional information, whichever is greater.

d. Claims over $50,000 but less than or equal to $375,000. City shall respond in writing within 60 days of receipt, or, may request in writing within 30 days of receipt of the claim, any additional documents supporting the claim or relating to defenses or claims City may have against the Contractor. If additional information is needed thereafter, it shall be provided pursuant to mutual agreement between City and the Contractor. City's response shall be submitted within 30 days after receipt of the further documents, or within the same period of time taken by the Contractor to produce the additional information or documents, whichever is greater. The Contractor shall make these records and documents available at all reasonable times, without any direct charge.

e. Claims in excess of $375,000. The City shall respond in writing within a reasonable period of time to review and evaluate the Claim. The City may request in writing any additional documents supporting the claim or relating to defenses or claims the City may have against the claimant. The Contractor shall make these records and documents available at all reasonable times, without any direct charge.

f. All Claims. The Contractor will submit the claim justification in the following format:

1) Summary of claim merit and price, and Contract clause pursuant to which the claim is made.

2) List of documents relating to claim

(a) Specifications

(b) Drawings

(c) Clarifications (Requests for Information)

(d) Schedules

(e) Other

3) Chronology of events and correspondence

4) Analysis of claim merit

5) Analysis of claim cost

6) Analysis of time impact analysis in CPM format

7) Cover letter and certification of validity of the claim

g. All Claims. If the Contractor disputes City's response, or if City fails to respond within the statutory time period(s), the Contractor may so notify City within 15 days of the receipt of the response or the failure to respond, and demand an informal conference to meet and confer for settlement. Upon such demand, City shall schedule a meet and confer conference within 30 days.

h. The Contractor must comply with the claims filing procedures set forth in Government Code sections 900 et seq. for any claim or any portion thereof that remains in dispute after the meet and confer conference. For purposes of those provisions, the time within which a claim must be filed shall be tolled from the time the Contractor submits the written claim until the time the claim is denied, including any time utilized for the meet and confer conference.

i. Submission of a claim, properly certified, with all required supporting documentation, and written rejection or denial of all or part of the claim by City, is a condition precedent to any action, proceeding, litigation, suit, general conditions claim, or demand for arbitration by Contractor.

j. i. Government Code Claim. In addition to any and all contract requirements pertaining to notices of and requests for compensation or payment for extra work, disputed work, construction claims and/or changed conditions, the Contractor must comply with the claim procedures set forth in Government Code section 900 et seq. prior to filing any lawsuit against the City. Such Government Code claims and any subsequent lawsuit based upon the Government Code claims shall be limited to those matters that remain unresolved after all procedures pertaining to extra work, disputed work, construction claims, and/or changed conditions have been followed by Contractor. If no such Government Code claim is submitted, or if the prerequisite contractual requirements are not otherwise satisfied as specified herein, Contractor

shall be barred from bringing and maintaining a valid lawsuit against the City.

ARTICLE 47. CITY'S RIGHT TO TERMINATE CONTRACT

a. Termination for Cause. City may, without prejudice to any other right or remedy, serve written notice upon Contractor of its intention to terminate this Contract in whole or in part if the Contractor: (i) refuses or fails to prosecute The Work or any part thereof with such diligence as will ensure its completion within the time required; (ii) fails to complete The Work within the required time; (iii) should file a bankruptcy petition or be adjudged a bankrupt; (iv) should make a general assignment for the benefit of its creditors; (v) should have a receiver appointed; (vi) should persistently or repeatedly refuse or fail to supply enough properly skilled workers or proper materials to complete the work; (vii) should fail to make prompt payment to subcontractors or for material or labor; (viii) persistently disregard laws, ordinances, other requirements or instructions of City; or (ix) should violate any of the provisions of the Contract Documents.

The notice of intent to terminate shall contain the reasons for such intention to terminate. Unless within ten (10) Days after the service of such notice, such condition shall cease or satisfactory arrangements (acceptable to City) for the required correction are made, this Contract shall be terminated. In such case, Contractor shall not be entitled to receive any further payment until the Project has been finished. City may take over and complete The Work by any method it may deem appropriate. Contractor and its surety shall be liable to City for any excess costs or other damages incurred by City to complete the Project. If City takes over The Work, City may, without liability for so doing, take possession of and utilize in completing The Work such materials, appliances, plant, and other property belonging to the Contractor as may be on the Project site.

b. Termination For Convenience. City may terminate performance of The Work in whole or, in part, if City determines that a termination is in City's interest.

The Contractor shall terminate all or any part of The Work upon delivery to the Contractor of a Notice of Termination specifying that the termination is for the convenience of City, the extent of termination, and the effective date of such termination.

After receipt of Notice of Termination, and except as directed by City, the Contractor shall, regardless of any delay in determining or adjusting any amounts due under this Termination for Convenience clause, immediately proceed with the following obligations:

1) Stop Work as specified in the Notice.

2) Complete any Work specified in the Notice of Termination in a least cost/shortest time manner while still maintaining the quality called for under the Contract Documents.

3) Leave the property upon which the Contractor was working and upon which the facility (or facilities) forming the basis of the Contract Documents is situated in a safe and sanitary manner such that it does not pose any threat to the public health or safety.

4) Terminate all subcontracts to the extent that they relate to the portions of The Work terminated.

5) Place no further subcontracts or orders, except as necessary to complete the remaining portion of The Work.

6) Submit to City, within ten (10) Days from the effective date of the Notice of Termination, all of the documentation called for by the Contract Documents to substantiate all costs incurred by the Contractor for labor, materials and equipment through the Effective Date of the Notice of Termination. Any documentation substantiating costs incurred by the Contractor solely as a result of City's exercise of its right to terminate this Contract pursuant to this clause, which costs the Contractor is authorized under the Contract Documents to incur, shall: (i) be submitted to and received by City no later than thirty (30) Days after the Effective Date of the Notice of Termination; (ii) describe the costs incurred with particularity; and (iii) be conspicuously identified as "Termination Costs Occasioned by City's Termination for Convenience."

7) These provisions are in addition to and not in limitation of any other rights or remedies available to City.

c. Savings Clause. If City terminates Contractor for cause, and if it is later determined that the termination was wrongful, such default termination shall automatically be converted to and treated as a termination for convenience. In such event, Contractor shall be entitled to receive only the amounts payable under this section, and Contractor specifically waives any claim for any other amounts or damages, including, but not limited to, any claim for consequential damages or lost profits.

d. Exception. Notwithstanding any other provision of this Article, when immediate action is necessary to protect life and safety or to reduce significant exposure or liability, City may immediately order Contractor to

cease Work on the Project until such safety or liability issues are addressed to the satisfaction of City or the Contract is terminated.

ARTICLE 48. WARRANTY AND GUARANTEE

a. Contractor warrants that all materials and equipment furnished under this Contract shall be new unless otherwise specified in the Contract Documents; and that all Work conforms to the Contract Document requirements and is free of any defect whether performed by the Contractor or any subcontractor or supplier.

b. Unless otherwise stated, all warranty periods shall begin upon the filing of the Notice of Completion. Unless otherwise stated, the warranty period shall be for one year.

c. The Contractor shall remedy at its expense any damage to City-owned or controlled real or personal property.

d. Contractor shall furnish City with all warranty and guarantee documents prior to final Acceptance of the Project by City.

e. City shall notify the Contractor, in writing, within a reasonable time after the discovery of any failure, defect, or damage. The Contractor shall within ten (10) Days after being notified commence and perform with due diligence all necessary Work. If the Contractor fails to promptly remedy any defect, or damage; the City have the right to replace, repair, or otherwise remedy the defect, or damage at the Contractor's expense.

f. In the event of any emergency constituting an immediate hazard to health, safety, property, or licensees, when caused by Work of the Contractor not in accordance with the Contract requirements, City may undertake at Contractor's expense, and without prior notice, all Work necessary to correct such condition.

g. With respect to all warranties, express or implied, from subcontractors, manufacturers, or suppliers for Work performed and Materials furnished under this Contract, the Contractor shall:

   1) Obtain for City all warranties that would be given in normal commercial practice;

   2) Require all warranties to be executed, in writing, for the benefit of City; and

   3) Enforce all warranties for the benefit of City, unless otherwise directed in writing by City.

This Article shall not limit City's rights under this Contract or with respect to latent defects, gross mistakes, or fraud. City specifically reserves all rights related to defective work, including but not limited to the defect claims pursuant to California Code of Civil Procedure Section 337.15.

ARTICLE 49. DOCUMENT RETENTION & EXAMINATION

a. In accordance with Government Code Section 8546.7, records of both City and the Contractor shall be subject to examination and audit by the State Auditor General for a period of three (3) years after final payment.

b. Contractor shall make available to City any of the Contractor's other documents related to the Project immediately upon request of City.

c. In addition to the State Auditor rights above, City shall have the right to examine and audit all books, estimates, records, contracts, documents, bid documents, subcontracts, and other data of the Contractor (including computations and projections) related to negotiating, pricing, or performing the modification in order to evaluate the accuracy and completeness of the cost or pricing data at no additional cost to City, for a period of four (4) years after final payment.

ARTICLE 50. SOILS INVESTIGATIONS

When a soils investigation report for the Project site is available, such report shall not be a part of the Contract Documents. Any information obtained from such report as to subsurface soil condition, or to elevations of existing grades or elevations of underlying rock, is approximate only and is not guaranteed. Contractor acknowledges that any soils investigation report (including any borings) was prepared for purposes of design only and Contractor is required to examine the site before submitting its bid and must make whatever tests it deems appropriate to determine the underground condition of the soil.

ARTICLE 51. SEPARATE CONTRACTS

a. City reserves the right to let other contracts in connection with this Work or on the Project site. Contractor shall permit other contractors reasonable access and storage of their materials and execution of their work and shall properly connect and coordinate its Work with theirs.

b. To ensure proper execution of its subsequent Work, Contractor shall immediately inspect work already in place and shall at once report to the Engineer any problems with the work in place or discrepancies with the Contract Documents.

c. Contractor shall ascertain to its own satisfaction the scope of the Project and nature of any other contracts that have been or may be awarded by City in prosecution of the Project to the end that Contractor may perform this Contract in the light of such other contracts, if any. Nothing herein contained shall be interpreted as granting to Contractor exclusive occupancy at site of the Project. Contractor shall not cause any unnecessary hindrance or delay to any other contractor working on the Project. If simultaneous execution of any contract for the Project is likely to cause interference with performance of some other contract or contracts, the Engineer shall decide which Contractor shall cease Work temporarily and which contractor shall continue or whether work can be coordinated so that contractors may proceed simultaneously. City shall not be responsible for any damages suffered or for extra costs incurred by Contractor resulting directly or indirectly from award, performance, or attempted performance of any other contract or contracts on the Project site.

ARTICLE 52. NOTICE AND SERVICE THEREOF

All notices shall be in writing and either served by personal delivery or mailed to the other party as designated in the Bid Forms. Written notice to the Contractor shall be addressed to Contractor's principal place of business unless Contractor designates another address in writing for service of notice. Notice to City shall be addressed to City as designated in the Notice Inviting Bids unless City designates another address in writing for service of notice. Notice shall be effective upon receipt or five (5) Days after being sent by first class mail, whichever is earlier. Notice given by facsimile shall not be effective unless acknowledged in writing by the receiving party.

ARTICLE 53. NOTICE OF THIRD PARTY CLAIMS

Pursuant to Public Contract Code Section 9201, City shall provide Contractor with timely notification of the receipt of any third-party claim relating to the Contract.

ARTICLE 54. STATE LICENSE BOARD NOTICE

Contractors are required by law to be licensed and regulated by the Contractors' State License Board which has jurisdiction to investigate complaints against contractors if a complaint regarding a patent act or omission is filed within four (4) years of the date of the alleged violation. A complaint regarding a latent act or omission pertaining to structural defects must be filed within ten (10) years of the date of the alleged violation. Any questions concerning a contractor may be referred to the Registrar, Contractors' State License Board, P.O. Box 26000, Sacramento, California 95826.

ARTICLE 55. INTEGRATION

a. Oral Modifications Ineffective. No oral order, objection, direction, claim or notice by any party or person shall affect or modify any of the terms or obligations contained in the Contract Documents.

b. Contract Documents Represent Entire Contract. The Contract Documents represent the entire agreement of City and Contractor.

ARTICLE 56. ASSIGNMENT

Contractor shall not assign, transfer, convey, sublet, or otherwise dispose of this Contract or any part thereof including any claims, without prior written consent of City. Any assignment without the written consent of City shall be void. Any assignment of money due or to become due under this Contract shall be subject to a prior lien for services rendered or Material supplied for performance of Work called for under the Contract Documents in favor of all persons, firms, or corporations rendering such services or supplying such Materials to the extent that claims are filed pursuant to the Civil Code, the Code of Civil Procedure or the Government Code.

ARTICLE 57. CHANGE IN NAME AND NATURE OF CONTRACTOR'S LEGAL ENTITY

Should a change be contemplated in the name or nature of the Contractor's legal entity, the Contractor shall first notify City in order that proper steps may be taken to have the change reflected on the Contract.

ARTICLE 58. ASSIGNMENT OF ANTITRUST ACTIONS

Pursuant to Section 7103.5 of the Public Contract Code, in entering into a public works contract or subcontract to supply goods, services, or materials pursuant to a public works contract, Contractor or subcontractor offers and agrees to assign to City all rights, title, and interest in and to all causes of action it may have under Section 4 of the Clayton Act (15 U.S.C. Section 15) or under the Cartwright Act (chapter 2 (commencing with Section 16700) of part 2 of division 7 of the Business and Professions Code), arising from the purchase of goods, services, or materials pursuant to this Contract or any subcontract. This assignment shall be made and become effective at the time City makes final payment to the Contractor, without further acknowledgment by the parties.

ARTICLE 59. PROHIBITED INTERESTS

No City official or representative who is authorized in such capacity and on behalf of City to negotiate, supervise, make, accept, or approve, or to take part in negotiating, supervising, making, accepting or approving any engineering, inspection, construction or material supply contract or any subcontract in connection with construction of the project, shall be or become directly or indirectly interested financially in the Contract.

ARTICLE 60. LAWS AND REGULATIONS

a. Contractor shall give all notices and comply with all federal, state and local laws, ordinances, rules and regulations bearing on conduct of work as indicated and specified by their terms. References to specific laws, rules or regulations in this Contract are for reference purposes only, and shall not limit or affect the applicability of provisions not specifically mentioned. If Contractor observes that drawings and specifications are at variance therewith, he shall promptly notify the Engineer in writing and any necessary changes shall be adjusted as provided for in this Contract for changes in work. If Contractor performs any work knowing it to be contrary to such laws, ordinances, rules and regulations, and without such notice to the Engineer, he shall bear all costs arising therefrom.

b. Contractor shall be responsible for familiarity with the Americans with Disabilities Act ("ADA") (42 U.S.C. § 12101 et seq.). The Work will be performed in compliance with ADA regulations.

ARTICLE 61. PATENT FEES OR ROYALTIES

The Contractor shall include in its bid amount the patent fees or royalties on any patented article or process furnished or used in the Work. Contractor shall assume all liability and responsibility arising from the use of any patented, or allegedly patented, materials, equipment, devices or processes used in or incorporated with The Work, and shall defend, indemnify and hold harmless City, its officials, officers, agents, employees and representatives from and against any and all liabilities, demands, claims, damages, losses, costs and expenses, of whatsoever kind or nature, arising from such use.

ARTICLE 62. OWNERSHIP OF DRAWING

All Contract Documents furnished by City are City property. They are not to be used by Contractor or any subcontractor on other work nor shall Contractor claim any right to such documents. With exception of one complete set of Contract Documents, all documents shall be returned to City on request at completion of The Work.

ARTICLE 63. NOTICE OF TAXABLE POSSESSORY INTEREST

In accordance with Revenue and Taxation Code Section 107.6, the Contract Documents may create a possessory interest subject to personal property taxation for which Contractor will be responsible.

END OF GENERAL CONDITIONS

SECTION 00750
SPECIAL CONDITIONS

1. SUMMARY OF THE PROJECT

Project Title: CITY OF LAKE FOREST
VILLAGE POND PARK IMPROVEMENT PROJECT

Project No.: PW 2015.26

Project Location: 23102 Ridge Route
Lake Forest, CA 92630
As shown approximately on the Vicinity Map in the Drawings
(Location of Pre-Bid Job Walk - November 1, 2016@10:00AM)

Project Description: Rehabilitation of an approximately 4.7 acre neighborhood park including the rehabilitation of the existing 1.1 AC lake with aeration system, installation of a new pumping/irrigation system, and all associated site development.

Construction
Site Description: The site is large enough to allow for the storage of all construction materials. Contractor's construction office shall be on-site and the entire project site shall be secured with fencing from the surrounding neighborhood.

2. SPECIFIC MATERIALS

City has not made findings pursuant to Public Contract Code Section 3400(b) regarding the use of specific materials, products, things, and/or services that must be utilized for the Project.]

3. STORM WATER SPECIFICATIONS – SWPPP PREPARATION & IMPLIMENTATION

City has not prepared a SWPPP or other storm water compliance plan for the Project site. Contractor shall be responsible for filing the NOI and for obtaining coverage under the Permit. This includes preparing and implementing a SWPPP for the Project site, and coordinating all submittals with the City's Legally Responsible Person and Authorized Signatory as those terms are defined in the Permit. Before any NOI, SWPPP, or other Permit related document may be submitted to the State Board or implemented on the Project site, it must first be reviewed and approved by the City. If the Project is less than one acre in size Contractor is still required to develop and implement an erosion and sediment control plan for the Work site. Contractor shall include all costs of compliance with specified requirements in the Contract amount.

4. PRE-CONSTRUCTION MEETING.

After, or upon, notification of Contract Award, the Engineer will set the time and location for the Pre-Construction Meeting. Attendance of the Contractor's management personnel responsible for the management, administration, and execution of the project is mandatory for the meeting to be convened. Failure of the Contractor to have the Contractor's responsible project personnel attend the Pre-Construction Meeting will be grounds for default by Contractor. No separate payment will be made for the Contractor's attendance at the meeting. The Notice to Proceed will only be issued on or after the completion of the Pre-Construction meeting.

5. MODIFICATION OF HOURS OF WORK

The Contractor’s activities shall be confined to Monday through Friday, excluding City holidays and weekends. The Contractor’s activities shall be confined to the hours between 8:00 a.m. and 5:00 p.m. Working hours on arterial streets, including closure of travel lanes, will be allowed only between the hours of 9:00 a.m. and 3:00 p.m. Deviation from these hours will not be permitted without written request and the prior consent of the Engineer, except in emergencies involving immediate hazard to persons or property. In the event of either a requested, or emergency deviation, inspection service fees will be charged against the Contractor. The service fees will be calculated at overtime rates, including benefits, overhead, and travel time. The service fees will be deducted from any amounts due the Contractor.

6. STREET CLOSURES, DETOURS, BARRICADES

Existing electrical systems (traffic signal, highway and street lighting, flashing beacon, sign illumination and other facilities), or approved temporary replacements thereof, shall be kept in effective operation for the benefit of the traveling public during the progress of the work, except when shutdown is permitted to allow for alterations or final removal of the systems. The traffic signal shutdowns shall be limited to normal working hours, or shall be as specified in the special provisions. Lighting system shutdowns shall not interfere with the regular lighting schedule, unless otherwise permitted by the Engineer. The Contractor shall notify the Engineer prior to performing any work on existing systems.

The Contractor shall notify the City prior to any operational shutdown of a traffic signal. The City will:

1. Continue the operation and maintenance of existing electrical facilities.

2. Continue to provide for electrical energy for the operation of existing electrical facilities.

3. Repair or replace existing facilities damaged by public traffic.

4. Pay the cost of electrical energy for the operation of existing or new facilities that are undergoing the functional tests.

The Contractor shall ascertain the exact location and depth of existing detectors, conduits, pull boxes and other electrical facilities before using any tools or equipment that may damage those facilities or interfere with any electrical system.

Where damage is caused by the Contractor's operations, the Contractor shall, at the Contractor's expense, repair or replace damaged facilities promptly in conformance with these specifications. If any existing loop conductor, including the portion leading to the detector handhole or termination pull box, is damaged by the contractor's operations, the Contractor shall immediately notify the Engineer. The affected detectors shall be replaced at the Contractor's expense and as directed by the Engineer within 24 hours. If the Contractor fails to complete the repairs within this period, the repairs will be made by the City at the Contractor's expense.

Should the Contractor fail to perform the required repairs or replacements, the cost of performing the repairs or replacements will be deducted from any moneys due or to become due to the Contractor.

Where roadways are to remain open to traffic and existing lighting systems are to be modified, the lighting systems shall remain in operation and the final connection to the modified circuit shall be made so that the modified circuit will be in operation by nightfall of the same day.

Temporary electrical installations shall be kept in effective operation until the temporary installations are no longer required for the traveling public.

During traffic signal system shutdown the Contractor shall place "STOP AHEAD" and "STOP" signs to direct vehicle and pedestrian traffic through the intersection. All signal faces shall be covered when the system is shutdown overnight. Temporary "STOP AHEAD" and "STOP" signs shall be either covered or removed when the system is turned on.

"STOP AHEAD" and "STOP" signs shall be furnished by the Contractor and shall conform to the provisions in Caltrans Standard Specification section 12-3.06, "Construction Area Signs." Minimum size of "STOP" signs shall be 30 inches.

One "STOP AHEAD" sign and one "STOP" sign shall be placed for each direction of traffic. For two-lane approaches, 2 "STOP" signs shall be placed. Location of the signs shall be as directed by the Engineer.

Barricades shall be equipped with flashing warning lights. All power required devices shall be operated by batteries, rather than generators.

Street closures will not be allowed, except as specifically permitted by the Engineer. Traffic control shall be approved by the Engineer.

Lane transitions shall conform to the latest edition of the California Manual on Uniform Traffic Control Devices (MUTCD).

Temporary traffic channelization shall be accomplished with barricades or delineators. Temporary striping will not be allowed unless specifically permitted by the Engineer. The Contractor shall prepare any plans that may be required for temporary striping to the satisfaction of the Engineer. In no event will temporary striping be allowed on finished pavement surfaces, which are to remain. The Contractor shall prepare any traffic control or detour plans that may be required as directed by the Engineer. The Contractor shall submit Traffic Control Plans for all work on arterial roads, prepared and signed by a California Registered Civil or Traffic Engineer at least ten (10) working days prior to commencing work.

The Contractor shall schedule an employee to police the temporary delineators and barricades within the travel way during weekday, nonworking hours, and over Saturdays, Sundays, and holidays. Any corrective work required to be done by City forces shall be back charged to the Contractor based on the actual costs, plus City overhead and withheld from the final payment.

All costs to the Contractor for street closures, detours, barricades, and associated plans shall be included in various lump sum contract bid items, and no separate payment will be made therefore.

7. SURVEY CONTROL AND REFERENCE POINTS

Prior to the start of construction, the Contractor (its licensed surveyor or qualified engineer) shall locate all monuments (both of record and not of record), bench marks, and centerline ties within one hundred feet of the construction activity. Additional ties to monuments shall be set when ties are missing (min. four ties per monument). The Contractor shall prepare and submit for review to the City Engineer separate tie sheets and Corner Record sheets (monuments not of record shall have only tie sheets prepared). Corner Records shall conform to the County Engineers' Association of California's "Guide to the Preparation of Records of Survey and Corner Records" document as provided by the County of Orange Land Surveyor's Office and on file in the City of Lake Forest City Engineers Office. Upon review by the City Engineer, the Contractor shall file the Corner Records with the County of Orange Land Surveyor's Office. Certified Corner Records shall be filed with the City Engineer. Prior to final Acceptance by the City, the Contractor shall re-survey all field monuments and centerline ties within the construction zone, prepare tie sheets and corner record sheets as indicated above, and file them with the City Engineer for review. After review by the

City Engineer, the land surveyor shall file the corner records with the County Land Surveyors Office, and file certified copies of the corner records with the City Engineer.

All survey monuments removed or altered as a result of construction shall be reset, corner records shall be filed with the County of Orange Land Surveyor's Office, and approved final corner records shall be filed with the City Engineer. Centerline ties removed as a result of construction shall be reset and tie sheets filed with the City Engineer.

Contractor shall provide a letter of certification for all monuments having four or more existing ties which are within 0.02 ft plus or minus of the original City tie sheet records. When several monuments and ties appear on one tie sheet and one of the ties has changed the land surveyor shall re-measure all of the ties and re-file a new ties sheet with the City as required herein.

County of Orange permanent and temporary bench marks within the construction zone shall be located by survey, and the Contractor shall send a written notification of impending construction to the County of Orange Land Surveyor's Office two weeks prior to construction.

8. SCHEDULE OF VALUES

Prepare a SCHEDULE OF VALUES for all Lump Sum ("LS") Allowance ("Allow") Bid Items included in the Bid Schedule using the Form included following this introductory document as an aid, for listed groups of Work under the Contract.

SCHEDULE OF VALUES shall be subject to review and approval of Construction Manager and City. Upon execution of the Agreement, approved SCHEDULE OF VALUES will become a part of the Contract Documents. Each Application for Payment shall include an updated SCHEDULE OF VALUES and will be the basis upon which payments are made.

SCHEDULE OF VALUES WORK CATEGORIES

PART A - SITE WORK

Bid Item 1 - MOBILIZATION/DEMOBILIZATION

Bid Item 2 - CLEARING & GRUBBING WITH REMOVE AND SALVAGE

Bid Item 3- SWPPP/STORMWATER POLLUTION & EROSION CONTROL/BMPs

Bid Item 4 - SITE GRADING/EARTHWORK

Bid Item 5 - EXPORT

PART B - SITE AMENTITIES

Bid Item 16 - LIGHTING AND ELECTRICAL SYSTEM

Bid Item 18 - PREFABRICATED BRIDGE 30' LONG INCLUDING ABUTMENTS

Bid Item 19- PEDESTRIAN BRIDGE- INCL. ABUTMENTS WITH CONTRACTOR PAID FOR AND PROVIDED STRUCTURAL CALCULATIONS

Bid Item 20 - BOULDERS & GFRC BOULDERS

Bid Item 21 - MEMORIAL PLAQUE RELOCATION WITH BOULDERS

PART C - SITE FURNISHINGS

Bid Item 26 - INTERPRETAVE SIGNAGE

PART D – LANDSCAPE AND IRRIGATION IMPROVEMENTS

Bid Item 47 - 90 DAY PLANT MAINTENANCE AND ESTABLISHMENT PERIOD

PART E – LAKE REFURBISHMENT

Bid Item 48 - REMOVAL & RECONSTRUCTION OF EXISTING POND OVERFLOW
WITH CONNECTION TO STORM DRAIN

Bid Item 49 - POND DRAINAGE INCLUDING TEMPORARY CONNECTION TO ETWD SEWER & PERMITS

Bid Item 50 - DEWATERING AND DISPOSAL OF POND SEDIMENT (EST. 2,700 CY)

Bid Item 51 - FLOATING ISLAND

Bid Item 52 - FLOATING FOUNTAINS

Bid Item 53 -	FILTER
Bid Item 54A -	CAST IN PLACE VAULT PUMP STATION
Bid Item 55 -	INSTALLATION OF NEW PUMP
Bid Item 56 -	PIPING (INCLUDING INSTALLATION OF DISCHARGE & SUCTION LINES AND SCREENS)
Bid Item 57 -	SALVAGE & RE-USE OF EXISTING AERATION EQUIPMENT
Bid Item 58 -	ALUM ADDITION SYSTEM
Bid Item 59 -	MISCELLANEOUS PUMP STATION APPURTENANCES (FITTINGS, LIGHTS LADDER, ETC.)
Bid Item 60 -	CONTROL PANEL & ELECTRICAL INSTALLATION
Bid Item 61 -	AUTOMATIC FILL

ADD ALTERNATIVE ITEMS

Bid Item 54B –	PRE-CAST IN PLACE VAULT PUMP STATION

FEE

Amount for Contractor's overhead and profit.

END OF DOCUMENT
(SCHEDULE OF VALUES FORM follows)

SCHEDULE OF VALUES FORM

Bid Item #	Contract Item Description	Schedule of Values		
	Description	Labor	Material	Total
PART A – Site Work				
1	Mobilization/Demobilization (Not to Exceed 5% of Total Contract Price)			
2	Clearing and Grubbing with remove and salvage, and inclusion of 3' lake edge walk			
3	SWPPP /Stormwater Pollution Prevention & Erosion Control / BMPs			
4	Site grading/ earthwork (Est. 3,600 CY)			
5	Export (Est. 280 CY)			
PART B – Site Amenities				
16	Lighting and electrical system			
18	Prefabricated bridge- 30' long incl. abutments			
19	Pedestrian bridge- incl. abutments with contractor paid for and provided structural calculations			
20	Boulders and GFRC boulders			
23	Memorial plaque relocation with boulders			
PART C – Site Furniture				
26	Interpretive signage			

PART D – Landscape & Irrigation Improvements				
47	90 Day Plant Establishment and Maintenance Period			
PART E – Lake Refurbishment				
48	Removal & Reconstruction of Existing Pond Overflow with connection to Storm Drain			
49	Pond Drainage including temporary connection to ETWD sewer & permits			
50	Dewatering and Disposal of Pond Sediment (Est. 2,700 CY)			
51	Floating island			
52	Floating fountains			
53	Filter			
54A	Cast in-place vault pump station			
55	Installation of new pump			
56	Piping (including installation of discharge & suction lines and screens)			
57	Salvage & Re-use of Existing Aeration Equipment			
58	Alum Addition System			
59	Miscellaneous pump station appurtenances (fittings, ladder, lights, etc)			
60	Control Panel & Electrical Installation			
61	Automatic Fill			

ADD ALTERNATE ITEMS				
54B	Substitutes for 54A – Alternate - Pre-Cast Vault			
	FEE			
	Contractor's overhead and profit			

8. MEASUREMENT AND PAYMENT PROCEDURES

Procedures, processes, and methods for preparation and presentation of Applications for Payment.

A. RELATED DOCUMENTS AND SECTIONS

1. Agreement Form: Contract Sum.
2. General Provisions of the Contract: Amounts for Progress Payments and Final Payment, retainages and time schedule for presenting Applications for Payment.

B. FORM

1. Payment Application Form: Unless otherwise directed, prepare Applications for Payment using the City approved form provided by the Construction Manager.

C. PREPARATION OF APPLICATIONS

1. Preparation of Applications for Payment: The following requirements supplement the provisions of the General Provisions of the Contract.

    a. Present required information typewritten on the specified forms.
    b. Execute certification by notarized signature of authorized officer of the Contractor.
    c. Use data from reviewed and accepted Schedule of Values.
    d. Provide dollar value in each column of Application for each line item for portion of Work performed and for products stored, if permitted.
    e. List each authorized Change Order as an extension on the continuation sheet, listing the Change Order number and dollar value as for an original portion of Work. No Change Orders shall be included with Application for Payment until approved in writing by Construction Manager.
2. List each Construction Change Directive as each provides for an adjustment in the Contract Sum. Include in the Application only amounts not in dispute.

D. SUBMISSION OF APPLICATIONS FOR PAYMENT

1. Submission of Applications for Payment: The following requirements supplement the provisions of the General Provisions of the Contract.
2. Submit one copy of each Application for Payment with original signature. Round off values to nearest dollar or as specified for the Schedule of Values.

3. Submit an updated Construction Schedule with each Application for Payment.
4. Payment Period: Submit Applications at intervals and covering periods stated in the Agreement.
5. Application submission date may be adjusted by mutual consent of the Construction Manager and Contractor to coincide with regularly scheduled progress meetings or to accommodate holiday periods.
6. Lien Releases: Provide with each Application for Payment, lien releases from all subcontractors, workers and materials suppliers employed for the Project.
7. Lien releases shall cover portion of Work to date for which payment application is made.
8. Lien release forms will be provided by Construction Manager and shall be completed in accordance with directions provided.

E. SUBSTANTIATING DATA

1. Substantiating Data: Submit substantiating information, as required by Construction Manager, to substantiate dollar amounts on Application for Payment.
2. Substantiating information will normally be required only for those portions of Work whose completion state cannot be readily determined by observation of the completed Work.
3. Provide one copy of substantiating information with each copy of the Application for Payment.

F. MEASUREMENT AND PAYMENT

1. Summary: This section defines the bid schedule, and describes measurement and payment provisions for each of the bid items.
2. Payment for all items of the Bid Schedule whether lump sum or Unit Price shall Include all compensation to be received by the CONTRACTOR for furnishing all tools, equipment, supplies, and manufactured articles, and for all labor, operations, and incidental appurtenant to the items of work being described, as necessary to complete the various items of the WORK all in accordance with the requirements of the Contract Documents, and including all costs of permits and cost of compliance with the regulations of public agencies having jurisdiction, including Safety and Health Requirements of the California Division of Industrial Safety and the Occupational Safety and Health Administration of theU.S. Department of Labor (OSHA).
3. No separate payment will be made for any item that is not specifically set forth in the Bid Schedule, and all costs shall be included in the prices named in the Bid Schedule for the various

appurtenant items of work and no additional compensation will be allowed therefore.

4. Payment for Unit Price work shall be made for the actual quantities of Contract Items removed, constructed, or disposed of in accordance with the Plans and these Specifications. Measurement of Unit Price work shall be as specified in SSPWC, Section 9-1 "Measurement of Quantities for Unit Price Work" or as indicated in these Specifications. Payment for Lump Sum work shall be paid for in accordance with the Approved Schedule of Values, at the price indicated in the Bid, and in accordance with SSPWC, Section 9-2 "Lump Sum Work".

G. MEASUREMENT AND PAYMENT ITEMS

Payment for all Work shall be included in the various bid items. No additional compensation shall be made therefore. Work associated with each bid item shall include but not be limited to the following description of bid items:

SITE WORK

1. <u>MOBILIZATION/DEMOBILIZATION (ITEM NO. 1)</u>

A. The work required for Mobilization/Demobilization shall conform to Article 40 of the General Provisions, and as amended in these Contract Documents.

B. Full compensation for all preparatory work and operations for the movement of personnel, equipment, supplies and incidentals to and from the project site; for the establishment of facilities necessary for the work on this project; and for all other work and operations which must be performed or costs incurred prior to beginning and completing work on the various contract items as well as the related demobilization costs anticipated at the completion of the project, shall be included in the lump sum price set forth in the Bid Schedule for **MOBILIZATION/ DEMOBILIZATION**. Payment shall be based on the approved schedule of values in accordance with the "Schedule of Values".

C. Payment for mobilization/demobilization **shall not exceed 5% of the CONTRACTOR'S total Contract price, before adding MOBILIZATION/ DEMOLIZATION to the total Contract Price**. At the beginning of the contract, 50% of the Bid Item shall be paid for mobilization required to complete the work as set forth in the Contract Document. After 100% of the contract is

completed including execution of the maintenance period for landscape and irrigation improvements, the other, remaining 50% of the Bid Item shall be paid for Demobilization. The CITY will not release the Demobilization portion of this bid item until the CITY has accepted all of the improvements included with this Contract. No additional compensation will be allowed.

2. CLEARING AND GRUBBING WITH REMOVAL OF CONCRETE CONCRETE LAKE EDGE WALKWAY AND SALVAGE OF TREES/PLAQUES/BASES MARKED TO BE RELOCATED (ITEM NO. 2)

A. The work required for demolition and clearing and grubbing shall conform to Articles 5, 23, and 27 of the General Conditions, Sections 015639 and 311000 of the Technical Specifications and Section 300-1 of the SSPWC, and as amended in these Contract Documents.

B. All materials indicated to be removed shall be recycled/disposed of per the requirements highlighted in Article 18 and 19 of the General Provisions of these Specifications.

C. Payment for this item will be made at the lump sum price named in the Bid Schedule for **CLEARING AND GRUBBING WITH REMOVAL OF CONCRETE CONCRETE LAKE EDGE WALKWAY AND SALVAGE OF TREES/PLAQUES/BASES MARKED TO BE RELOCATED**, which price shall constitute full compensation for furnishing all labor, materials, tools, equipment, and incidentals required for complete clearing and grubbing of the site, demolition of the concrete lake edge walkway, including the salvage and storage of designated trees to be relocated, plaques and other designated items in accordance with the Contract Documents.

D. Payment shall be based on the approved schedule of values in accordance with the “Schedule of Values”.

3. SWPPP/STORMWATER POLLUTION AND EROSION CONTROL/BMPs (ITEM NO. 3)

A. No measurement will be made for this item.

B. Payment for this item will be made at the lump sum price named in the Bid Schedule for **SWPPP/ STORMWATER POLLUTION AND EROSION CONTROL/ BMPs**, which shall include preparing and implementing a SWPPP for the Project site, and coordinating all submittals with the City's Legally Responsible Person and Authorized Signatory as those terms are defined in the Permit, including filing the NOI and for obtaining coverage under the Permit. Before any NOI, SWPPP, or other Permit related document may be submitted to the State Board or implemented on the Project site, it must first be reviewed and approved by the City.

C. Implementation of the SWPPP for the project shall constitute full compensation for furnishing all labor, materials, tools, equipment, and incidentals required for implementation of the approved SWPPP. SWPPP Implementation shall include but not be limited to: ensuring compliance with the California General Construction Permit Order No. 2009-0009-DWQ; providing a Qualified SWPPP Practitioner (QSP), performing weather monitoring, performing Best Management Practices (BMP) inspections, performing stormwater monitoring/reporting, coordination with the Qualified SWPPP Developer (QSD), completion of SWPPP annual reports, and filing of the Notice of Termination (NOT).

D. Payment shall be based on the approved schedule of values in accordance with the “Schedule of Values”.

4. EARTHWORK/SITE GRADING (ITEM NO. 4)

A. The work required for earthwork site grading shall conform to Articles 5, 23, 24, 26 and 27 of the General Conditions, Sections 015639 and 312000 of the Technical Specifications and Section 300 of the SSPWC, and as amended in these Contract Documents.

B. No measurement will be made for this item.

C. Payment for this item will be made at the lump sum price named in the Bid Schedule for **SITE GRADING/EARTHWORK**, which price shall constitute full compensation for furnishing all labor, materials, tools, equipment, and incidentals required for complete grading of the site in accordance with the Contract

Documents. Placement and compaction of fill should be performed in accordance with local grading ordinances under the observation and testing of the geotechnical consultant.

D. Payment shall be based on the approved schedule of values in accordance with the "Schedule of Values".

5. <u>EXPORT (ITEM NO. 5)</u>

A. The work required for export shall conform to Articles 5, 23, 24, 26 and 27 of the General Conditions, Sections 015639 and 312000 of the Technical Specifications and Section 300 of the SSPWC, and as amended in these Contract Documents.

B. No measurement will be made for this item.

C. Payment for this item will be made at the lump sum price named in the Bid Schedule for **EXPORT**, which price shall constitute full compensation for furnishing all labor, materials, tools, equipment, and incidentals required for exporting of any excess soil material related to the grading operations, estimated at 280CY, in accordance with the Contract Documents.

D. Payment shall be based on the approved schedule of values in accordance with the "Schedule of Values".

SITE AMENITIES

6. <u>CONCRETE PAVING - WALKWAY (ITEM NO. 6)</u>

A. PCC concrete paving - walkway shall be constructed in accordance with Sections 033000 and 321313 of the Technical Specifications and Sections 201-1 and 303-5 of the SSPWC and as amended in these Contract Documents.

B. Subgrade preparation for concrete paving shall be in accordance with Sections 033000 and 321313 of the Technical Specifications and Section 301-1.3 of this Contract Document.

C. Color and finish of concrete paving shall be in accordance with the Contract Plans, Sections 033000 and 321313 of the Technical Specifications and as outlined in Section 303-7 of these Specifications.

D. Payment for the construction of concrete paving – walkway shall be paid at the Contract unit price per square foot as set forth in Bid Schedule for **CONCRETE PAVING - WALKWAY**. Payment shall include, but is not limited to, test panels, reinforcing steel, and all other labor, materials, tools, and equipment required for the construction of concrete paving - walkway.

E. Payment shall be based on the Unit Price and actual quantities installed, complete in place. No additional compensation will be allowed. Measurement and Payment shall be in accordance with Article 41 through 43 in the General Provisions of these Contract Documents.

7. <u>CONCRETE PAVING - ENHANCED & PICNIC TABLE CONCRETE PAVING(ITEM NO. 7 & 17)</u>

A. PCC concrete paving – enhanced and picnic table paving shall be constructed in accordance with Sections 033000 and 321313 of the Technical Specifications and Sections 201-1 and 303-5 of the SSPWC and as amended in these Contract Documents.

B. Subgrade preparation for concrete paving shall be in accordance with Sections 033000 and 321313 of the Technical Specifications and Section 301-1.3 of this Contract Document.

C. Color and finish of concrete paving shall be in accordance with the Contract Plans, Sections 033000 and 321313 of the Technical Specifications and as outlined in Section 303-7 of these Specifications.

D. Payment for the construction of concrete paving – walkway shall be paid at the Contract unit price per square foot as set forth in Bid Schedule for **CONCRETE PAVING - ENHANCED**. Payment shall include, but is not limited to, test panels, reinforcing steel, and all other labor, materials, tools, and equipment required for the construction of concrete paving - walkway.

E. Payment for the construction of concrete paving – walkway shall be paid at the Contract unit price per square foot as set forth in Bid Schedule for **CONCRETE PAVING – PICNIC TABLE CONCRETE PAVING**. Payment shall include, but is not limited

to, test panels, reinforcing steel, and all other labor, materials, tools, and equipment required for the construction of concrete paving - walkway.

F. Payment shall be based on the Unit Price and actual quantities installed, complete in place. No additional compensation will be allowed. Measurement and Payment shall be in accordance with Article 41 through 43 in the General Provisions of these Contract Documents.

8. <u>CONSTRUCT PCC COMMERCIAL DRIVEWAY ACCESS APPROACH (ITEM NO. 8)</u>

A. Construct PCC Commercial Driveway access will be measured as each unit installed, complete in place, on an individual unit basis.

B. Payment for the construction of PCC Commercial Driveway Approach shall be paid at the Contract unit price per each as set forth in Bid Schedule for **CONSTRUCT PCC COMMERCIAL DRIVEWAY APPROACH**. Payment shall include, but is not limited to, test panels, reinforcing steel, and all other labor, materials, tools, and equipment required for the construction of concrete paving - walkway.

C. Payment shall be based on the Unit Price and actual quantities installed, complete in place. No additional compensation will be allowed. Measurement and Payment shall be in accordance with Article 41 through 43 in the General Provisions of these Contract Documents.

9. <u>CONCRETE CURB AND GUTTER (ITEM NO. 9)</u>

A. PCC concrete paving - walkway shall be constructed in accordance with Sections 033000 and 321313 of the Technical Specifications and Sections 201-1 and 303-5 of the SSPWC and as amended in these Contract Documents.

B. Subgrade preparation for concrete paving shall be in accordance with Sections 033000 and 321313 of the Technical Specifications and Section 301-1.3 of this Contract Document.

C. Color and finish of concrete paving shall be in accordance with

the Contract Plans, Sections 033000 and 321313 of the Technical Specifications and as outlined in Section 303-7 of these Specifications.

D. Payment for the construction of concrete paving – walkway shall be paid at the Contract unit price per square foot as set forth in Bid Schedule for **CONCRETE CURB AND GUTTER.**. Payment shall include, but is not limited to, all labor, materials, tools, and equipment required for the construction of concrete curb and gutter.

E. Payment shall be based on the Unit Price and actual quantities installed, complete in place. No additional compensation will be allowed. Measurement and Payment shall be in accordance with Article 41 through 43 in the General Provisions of these Contract Documents.

10. 3" THICK DECOMPOSED GRANITE LAYER (ITEM NO. 10)

A. 3" Thick Decomposed Granite Layer shall be constructed in accordance with Sections 0329310 of the Technical Specifications and will be measured as each unit installed, complete in place, on a square foot basis.

B. Payment for **3" THICK DECOMPOSED GRANITE LAYER** shall be made at the square foot price named in the Bid Schedule. Decomposed Granite shall be installed to the lines and grades shown on the plans and details, and in conformance with the specifications. The Contract Unit Price shall include full compensation for furnishing of all labor materials, tools, equipment, and incidentals, and for doing all the work involved, complete in place as shown on the plans, as specified in these special provisions and as directed by the Engineer.

C. Payment shall be based on the Unit Price and actual quantities installed, complete in place. No additional compensation will be allowed. Measurement and Payment shall be in accordance with Article 41 through 43 in the General Provisions of these Contract Documents.

11. CONCRETE MOWSTRIP (ITEM NO. 11)

A. Concrete Mowstrips shall be constructed to the lines and grades shown on the plans and details, and in conformance with the specifications and shall be measured as each unit installed, complete in place, on a per lineal foot basis.

B. Payment for **CONCRETE MOWSTRIPS** will be made at the linear foot price named in the Bid Schedule. The Contract Unit Price for Concrete Mowstrips shall include full compensation for furnishing all labor materials, tools, equipment, and incidentals, including but not limited to, excavation, sub-grade preparation, compaction per soils report, formwork, reinforcement, joint installation, joint sealants, poured-in-place concrete, curing compound, backfilling and for doing all work involved, complete in place as shown on the plans, as specified in these special provisions and as directed by the Engineer.

C. Payment shall be based on the Unit Price and actual quantities installed, complete in place. No additional compensation will be allowed. Measurement and Payment shall be in accordance with Article 41 through 43 in the General Provisions of these Contract Documents.

12. CONCRETE BANDING (ITEM NO. 12)

A. Concrete Banding shall be constructed to the lines and grades shown on the plans and details, and in conformance with the specifications and shall be measured as each unit installed, complete in place, on a per lineal foot basis.

B. Payment for **CONCRETE BANDING** will be made at the linear foot price named in the Bid Schedule. The Contract Unit Price for Concrete Banding shall include full compensation for furnishing all labor materials, tools, equipment, and incidentals, including but not limited to, excavation, sub-grade preparation, compaction per soils report, formwork, reinforcement, joint installation, joint sealants, poured-in-place concrete, curing compound, backfilling and for doing all work involved, complete in place as shown on the plans, as specified in these special provisions and as directed by the Engineer.

C. Payment shall be based on the Unit Price and actual quantities installed, complete in place. No additional compensation will be allowed. Measurement and Payment shall be in accordance

with Article 41 through 43 in the General Provisions of these Contract Documents.

13. RECYCLED PLASTIC HEADER BOARD (ITEM NO. 13)

A. Recycled Plastic Header Board shall be constructed to the lines and grades shown on the plans and details, and in conformance with the specifications and shall be measured as each unit installed, complete in place, on a per lineal foot basis.

B. Work required for the installation of the recycled plastic headers as detailed on the Contract Plans shall be in accordance with Section 308-3 of the SSPWC, and as amended herein in these Contract Documents and shall be measured as each unit installed, complete in place, on a per lineal foot basis..

C. Payment for this bid item shall be paid at the Contract unit price per lineal foot as set forth in Bid Schedule for **RECYCLED PLASTIC HEADER BOARD HEADER.** Payment shall include full compensation for providing all labor, materials, tools, equipment, incidentals, and any other necessary items required for furnishing and installing recycled plastic header board complete and in place as specified in these Contract Documents.

D. Payment shall be based on the Unit Price and actual quantities installed, complete in place. No additional compensation will be allowed. Measurement and Payment shall be in accordance with Article 41 through 43 in the General Provisions of these Contract Documents.

14. OVERHEAD STRUCTURE (ITEM NO. 14)

A. No measurement will be made for this item.

B. The work required for **OVERHEAD STRUCTURE** shall include full compensation for providing all labor, materials, tools, equipment, incidentals, and any other necessary items required for furnishing and installing the overhead structure complete and in place as specified in these Contract Documents. No additional compensation will be allowed.

C. Payment shall be based on the approved schedule of values in accordance with the “Schedule of Values”.

15. RAIL FENCING(ITEM NO. 15)

A. This work item consists of providing all labor, materials, tools, equipment and any other necessary items to furnish and install Rail Fencing as detailed in the Contract Documents.

B. CONTRACTOR shall stake the alignment of the rail fencing as shown on the Contract Plans and obtain approval of the alignment prior to the excavation of the post hole footings.

C. The rail fence footings shall meet the requirements of with Section 329320 of the Technical Specifications, Section 201-1 of the SSPWC, and as amended in these Contract Documents. Subgrade preparation for the footings shall be in accordance with Section 301-1.3 of this Contract Document.

D. Size and type of the rail fencing shall be as noted on the Contract Plans, or as approved by the Engineer. CONTRACTOR shall submit samples to the Engineer for approval prior to ordering any materials required to construct the lodge pole fence.

E. Rail Fencing will be measured as each unit installed, complete in place, on a per lineal foot basis.

F. Payment for Rail Fencing will be made at the linear foot price named in the Bid Schedule for **RAIL FENCING** shall be constructed to the lines and grades shown on the plans and details, and in conformance with the specifications. The Contract Unit Price for Rail Fencing shall include full compensation for furnishing all labor materials, tools, equipment, and incidentals, including but not limited to, post wall excavation, removal of spoils, grading, compaction, form work, concrete footing, posts, rails, and for doing all work involved, complete in place as shown on the plans, as specified in these special provisions and as directed by the Engineer.

G. Payment shall be based on the Unit Price and actual quantities installed, complete in place. No additional compensation will be allowed. Measurement and Payment shall be in accordance

with Article 41 through 43 in the General Provisions of these Contract Documents.

16. LIGHTING AND ELECTRICAL SYSTEM (ITEM NO. 16)

A. Work required for the construction of this item shall be constructed in accordance with Sections 260519 through 265619 of the Technical Specifications, the California Electric Code, as shown on the Contract Plans and as outlined in this Specification.

B. Light fixture assembly type and model shall be as outlined in the Fixture Schedule, as included in the Contract Plans. CONTRACTOR to submit sample of all colors and finishes to CITY for approval.

C. CONTRACTOR shall provide shop drawings of all light fixture assemblies, poles, foundations, and other appurtenances for review and approval by the CITY, in accordance with Article 8 of the General Conditions of this Contract Document.

D. Full compensation for providing all labor, materials, tools, equipment, and all other items required to construct light fixture foundations, furnish and install new light fixtures, and to complete all other associated work for sight lighting as described in these Contract Documents, shall be included in the contract lump sum price as set forth in Bid Schedules for **LIGHTING AND ELECTRICAL SYSTEM**.

E. Payment shall be based on the approved schedule of values in accordance with the “Schedule of Values”. No additional compensation will be allowed.

17. PREFABRICATED BRIDGE 30’ LONG INCL ABUTMENTS (ITEM NO. 18)

A. Prefabricated pedestrian bridge shall be per Excel Bridge Manufacturers Company, as shown on the Contract Plans, or an approved equivalent and shall meet the requirements of with Section 329320 of the Technical Specifications.

B. CONTRACTOR shall prepare and submit Structural Calculations for the pedestrian bridge head walls, concrete

footings and abutments, reinforcements, anchoring system and steel frame enclosures to the Engineer in accordance with Articles 8 and 9 of the General Provisions of this Contract Document.

C. CONTRACTOR shall submit Shop Drawings for all materials required to construct the pedestrian bridge, including but not limited to, the prefabricated bridge, waterproof membrane, and drain line, as outlined in these Contract Documents for CITY review and approval.

D. Subgrade preparation for the pedestrian bridge abutments shall be in accordance with Section 301-1.3 of this Contract Document.

E. Payment for the construction of the pedestrian bridge complete and in place shall be paid at the Contract lump sum unit price as set forth in Bid Schedule for **PREFABRICATED BRIDGE 30' LONG INCL. ABUTMENTS**. Payment shall include, but is not limited to, structural design, reinforcing steel, bridge abutments, drain lines and filter fabrics, and all other labor, materials, tools, and equipment required to furnish and construct the pedestrian bridge complete and in place over the creek bed.

F. Payment shall be based on the approved schedule of values in accordance with the "Schedule of Values". No additional compensation will be allowed.

18. PEDESTRIAN BRIDGE- INCL. ABUTMENTS WITH CONTRACTOR PAID FOR AND PROVIDED STRUCTURAL CALCULATIONS (ITEM NO. 19)

A. Pedestrian pedestrian bridge shall be constructed the details as shown on the Contract Plans and shall meet the requirements of with Section 329320 of the Technical Specifications.

B. CONTRACTOR shall prepare and submit Structural Calculations for the pedestrian bridge head walls, concrete footings and abutments, reinforcements, anchoring system and steel frame enclosures to the Engineer in accordance with Articles 8 and 9 of the General Provisions of this Contract Document.

C. CONTRACTOR shall submit Shop Drawings for all materials required to construct the pedestrian bridge, including but not limited to, the pedestrian bridge, waterproof membrane, and drain line, as outlined in these Contract Documents for CITY review and approval.

D. Subgrade preparation for the pedestrian bridge abutments shall be in accordance with Section 301-1.3 of this Contract Document.

E. Payment for the construction of the pedestrian bridge complete and in place shall be paid at the Contract lump sum unit price as set forth in Bid Schedule for **PEDESTRIAN BRIDGE- INCL. ABUTMENTS WITH CONTRACTOR PAID FOR AND PROVIDED STRUCTURAL CALCULATIONS**. Payment shall include, but is not limited to, structural design, reinforcing steel, bridge abutments, drain lines and filter fabrics, and all other labor, materials, tools, and equipment required to furnish and construct the pedestrian bridge complete and in place over the creek bed.

F. Payment shall be based on the approved schedule of values in accordance with the “Schedule of Values”. No additional compensation will be allowed.

19. BOULDERS & GFRC BOULDERS (ITEM NO. 20)

A. The work required for Boulders & GFRC Boulders shall conform to Section 03450 of the Technical Specifications and as amended in these Contract Documents.

B. No measurement will be made for this item.

C. Furnish all labor, materials, equipment and services necessary or incidental to completion of molded glass fiber reinforced concrete composites (G.F.R.C.) and associated work in accordance with the contract documents and all applicable building codes.

D. Payment for the construction of boulders & GFRC Boulders shall be paid at the Contract lump sum unit price as set forth in Bid Schedule for **BOULDERS & GFRC BOULDERS.** This price shall constitute full compensation for furnishing all labor,

materials, tools, equipment, and incidentals required for the construction and installation of the boulders & GFRC boulders in place on the site in accordance with the Contract Documents.

E. Payment shall be based on the approved schedule of values in accordance with the "Schedule of Values". No additional compensation will be allowed.

20. MONUMENT SIGN LOGO REPLACEMENT (ITEM NO. 21)

A. The work required for monument sign logo replacement shall conform to the details as shown on the Contract Plans and shall meet the requirements of with Section 329320 of the Technical Specifications and as amended in these Contract Documents.

B. These work items consists of providing all labor, tools, equipment, materials, and any other necessary items to **MONUMENT SIGN LOGO REPLACEMENT** as detailed on the Construction Plans and these Contract Documents.

C. In accordance with Section 2-1 of this Contract Document, CONTRACTOR shall provide shop drawings for monument sign logo within fifteen (15) working after the Award of Contract. In addition, CONTRACTOR shall secure the monument sign logo, and provide proof of delivery to the Engineer, within forty (40) working days after the Award of Contract.

D. Payment shall be based on the Unit Price and actual quantities installed, complete in place. No additional compensation will be allowed. Measurement and Payment shall be in accordance with Article 41 through 43 in the General Provisions of these Contract Documents.

21. 2' SQUARE PILASTER (ITEM NO. 22)

A. The work required for 2' square pilaster shall conform to the details as shown on the Contract Plans.

B. These work items consists of providing all labor, tools, equipment, materials, and any other necessary items to install **2'SQUARE PILASTER** as detailed on the Construction Plans and these Contract Documents.

C. Payment shall be based on the Unit Price and actual quantities installed, complete in place. No additional compensation will be allowed. Measurement and Payment shall be in accordance with Article 41 through 43 in the General Provisions of these Contract Documents.

22. MEMORIAL PLAQUE RELOCATION WITH BOULDERS (ITEM NO. 23)

A. The work required for memorial plaque relocation with boulders shall conform to the details as shown on the Contract Plans and shall meet the requirements of with Section 329320 of the Technical Specifications.

B. No measurement will be made for this item.

C. This work item consists of providing all labor, tools, equipment, materials, and any other necessary items for **MEMORIAL PLAQUE RELOCATION WITH BOULDERS** as detailed on the Construction Plans and these Contract Documents.

D. In accordance with Sections 8 and 9 of the General Conditions in these Contract Documents, CONTRACTOR shall provide shop drawings for the memorial plaques relocation with boulders within fifteen (15) working after the Award of Contract. In addition, CONTRACTOR shall secure the memorial plaques relocation with boulders, and provide proof of delivery to the Engineer, within forty (40) working days after the Award of Contract.

E. Payment for the memorial plaque relocation with boulders shall be paid at the Contract lump sum unit price as set forth in Bid Schedule for **MEMORIAL PLAQUE RELOCATION WITH BOULDERS**. This price shall constitute full compensation for furnishing all labor, materials, tools, equipment, and incidentals required for the plaque relocations in place on the site in accordance with the Contract Documents.

F. Payment shall be based on the approved schedule of values in accordance with the “Schedule of Values”. No additional compensation will be allowed.

23. RETAINING WALL (ITEM NO. 24)

A. The work required for memorial plaque relocation with boulders shall conform to the details as shown on the Contract Plans.

B. Masonry block for the retaining walls shall be precision cut block, color and size shall match existing, or as approved by the ENGINEER.

C. Full compensation for furnishing all labor, materials, tools, equipment, incidentals, and all other related costs associated with constructing the retaining wall including, but not limited to: excavation; protection of adjacent private property; reinforcing steel; concrete glue; and tooling joints as required; shall be included in the unit price per square foot as set forth in the Bid Schedule for **RETAINING WALL**.

D. Payment shall be based on the Unit Price and actual quantities installed, complete in place. No additional compensation will be allowed. Measurement and Payment shall be in accordance with Article 41 through 43 in the General Provisions of these Contract Documents.

24. GUARD RAIL(ITEM NO. 25)

A. This work item consists of providing all labor, materials, tools, equipment and any other necessary items to furnish and install Guard Rail as detailed in the Contract Documents.

B. CONTRACTOR shall stake the alignment of the Guard Rail as shown on the Contract Plans and obtain approval of the alignment prior to the excavation of the post hole footings.

C. The Guard rail footings shall meet the requirements of with Section 329320 of the Technical Specifications, Section 201-1 of the SSPWC, and as amended in these Contract Documents. Subgrade preparation for the footings shall be in accordance with Section 301-1.3 of this Contract Document.

D. Size and type of the guard rail shall be as noted on the Contract

Plans, or as approved by the Engineer. CONTRACTOR shall submit samples to the Engineer for approval prior to ordering any materials required to construct the guard rail.

E. Guard rail will be measured as each unit installed, complete in place, on a per lineal foot basis.

F. Payment for Guard Rail will be made at the linear foot price named in the Bid Schedule for **GUARD RAIL** shall be constructed to the lines and grades shown on the plans and details, and in conformance with the specifications. The Contract Unit Price for Guard Rail shall include full compensation for furnishing all labor materials, tools, equipment, and incidentals, including but not limited to, post wall excavation, removal of spoils, grading, compaction, form work, concrete footing, posts, rails, and for doing all work involved, complete in place as shown on the plans, as specified in these special provisions and as directed by the Engineer.

G. Payment shall be based on the Unit Price and actual quantities installed, complete in place. No additional compensation will be allowed. Measurement and Payment shall be in accordance with Article 41 through 43 in the General Provisions of these Contract Documents.

SITE AMENITIES

25. INTERPRETIVE SIGNAGE (ITEM NO. 26)

A. The work required for interpretive signage shall conform to the details as shown on the Contract Plans and shall meet the requirements of with Section 329320 of the Technical Specifications.

B. This work item consists of providing all labor, tools, equipment, materials, and any other necessary items for **INTERPRETIVE SIGNAGE** as detailed on the Construction Plans and these Contract Documents.

C. In accordance with Sections 8 and 9 of the General Conditions in these Contract Documents, CONTRACTOR shall provide shop drawings for the interpretive signage within fifteen (15) working after the Award of Contract. In addition, CONTRACTOR shall secure the interpretive signage, and

provide proof of delivery to the Engineer, within forty (40) working days after the Award of Contract.

D. Payment for the interpretive signage shall be paid at the Contract lump sum unit price as set forth in Bid Schedule for **INTERPRETIVE SIGNAGE**. This price shall constitute full compensation for furnishing all labor, materials, tools, equipment, and incidentals required for the interpretive signage in place on the site in accordance with the Contract Documents. No additional compensation will be allowed.

E. Payment shall be based on the approved schedule of values in accordance with the "Schedule of Values". No additional compensation will be allowed.

26. DRINKING FOUNTAIN (ITEM NO. 27)

A. The work required for drinking fountain shall conform to the details as shown on the Contract Plans and shall meet the requirements of with Section 329320 of the Technical Specifications and as amended in these Contract Documents.

B. These work items consists of providing all labor, tools, equipment, materials, and any other necessary items to install **DRINKING FOUNTAIN**, complete in place, as detailed on the Construction Plans and these Contract Documents.

E. In accordance with Sections 8 and 9 of the General Conditions in these Contract Documents, CONTRACTOR shall provide shop drawings for the drinking fountain within fifteen (15) working after the Award of Contract. In addition, CONTRACTOR shall secure the drinking fountain, and provide proof of delivery to the Engineer, within forty (40) working days after the Award of Contract.

C. Payment shall be based on the Unit Price and actual quantities installed, and shall include full compensation for furnishing all labor, materials, tools, equipment, and incidentals, including but not limited to, excavation, sub-grade preparation, shut-off valve and valve box, connection with water line, waste line, compaction, and any other necessary items as specified in these special provisions, and as directed by the Engineer.

D. Measurement and Payment shall be in accordance with Article 41 through 43 in the General Provisions of these Contract Documents. No additional compensation will be allowed.

27. TRASH RECEPTACLES (ITEM NO. 28)

A. The work required for Provide and Install Trash Receptacles shall conform to Section 329320 of the Technical Specifications and as amended in these Contract Documents.

B. These work items consists of providing all labor, tools, equipment, materials, and any other necessary items to provide and install **TRASH RECEPTACLES** as detailed on the Construction Plans and these Contract Documents.

F. In accordance with Sections 8 and 9 of the General Conditions in these Contract Documents, CONTRACTOR shall provide shop drawings for the trash receptacles within fifteen (15) working after the Award of Contract. In addition, CONTRACTOR shall secure the trash receptacles, and provide proof of delivery to the Engineer, within forty (40) working days after the Award of Contract.

C. Trash receptacles shall be located per the Contract Plans, and as approved by the Engineer and CITY Parks Supervisor.

D. Payment shall be based on the Unit Price and actual quantities installed, complete in place. No additional compensation will be allowed. Measurement and Payment shall be in accordance with Article 41 through 43 in the General Provisions of these Contract Documents.

28. THEMATIC BENCH (ITEM NO. 29)

A. The work required for Provide and Install Thematic Bench shall conform to Section 329320 of the Technical Specifications and as amended in these Contract Documents.

B. These work items consists of providing all labor, tools, equipment, materials, and any other necessary items to provide and install **THEMATIC BENCH** as detailed on the Construction Plans and these Contract Documents.

G. In accordance with Sections 8 and 9 of the General Conditions

in these Contract Documents, CONTRACTOR shall provide shop drawings for the Thematic Bench within fifteen (15) working after the Award of Contract. In addition, CONTRACTOR shall secure the Thematic Bench, and provide proof of delivery to the Engineer, within forty (40) working days after the Award of Contract.

C. Thematic Bench shall be located per the Contract Plans, and as approved by the Engineer and CITY Parks Supervisor.

D. Payment shall be based on the Unit Price and actual quantities installed, complete in place. No additional compensation will be allowed. Measurement and Payment shall be in accordance with Article 41 through 43 in the General Provisions of these Contract Documents.

29. BENCH (ITEM NO. 30)

A. The work required for provide and install Bench shall conform to Section 329320 of the Technical Specifications and as amended in these Contract Documents.

B. These work items consists of providing all labor, tools, equipment, materials, and any other necessary items to provide and install **BENCH** as detailed on the Construction Plans and these Contract Documents.

C. In accordance with Sections 8 and 9 of the General Conditions in these Contract Documents, CONTRACTOR shall provide shop drawings for the Bench within fifteen (15) working after the Award of Contract. In addition, CONTRACTOR shall secure the Bench, and provide proof of delivery to the Engineer, within forty (40) working days after the Award of Contract.

D. Bench shall be located per the Contract Plans, and as approved by the Engineer and CITY Parks Supervisor.

E. Payment shall be based on the Unit Price and actual quantities installed, complete in place. No additional compensation will be allowed. Measurement and Payment shall be in accordance with Article 41 through 43 in the General Provisions of these Contract Documents.

30. PICNIC TABLE - STANDARD (ITEM NO. 31)

A. The work required for Provide and Install Picnic Table - Standard shall conform to Section 329320 of the Technical Specifications and as amended in these Contract Documents.

B. These work items consists of providing all labor, tools, equipment, materials, and any other necessary items to provide and install **PICNIC TABLE - STANDARD** as detailed on the Construction Plans and these Contract Documents.

C. In accordance with Sections 8 and 9 of the General Conditions in these Contract Documents, CONTRACTOR shall provide shop drawings for the Picnic Table - Standard within fifteen (15) working after the Award of Contract. In addition, CONTRACTOR shall secure the Picnic Table - Standard, and provide proof of delivery to the Engineer, within forty (40) working days after the Award of Contract.

D. Picnic Table - Standard shall be located per the Contract Plans, and as approved by the Engineer and CITY Parks Supervisor.

E. Payment shall be based on the Unit Price and actual quantities installed, complete in place. No additional compensation will be allowed. Measurement and Payment shall be in accordance with Article 41 through 43 in the General Provisions of these Contract Documents.

31. PICNIC TABLE - ADA (ITEM NO. 32)

A. The work required for Provide and Install Picnic Table - ADA shall conform to Section 329320 of the Technical Specifications and as amended in these Contract Documents.

B. These work items consists of providing all labor, tools, equipment, materials, and any other necessary items to provide and install **PICNIC TABLE - ADA** as detailed on the Construction Plans and these Contract Documents.

C. In accordance with Sections 8 and 9 of the General Conditions in these Contract Documents, CONTRACTOR shall provide shop drawings for the Picnic Table - ADA within fifteen (15) working after the Award of Contract. In addition, CONTRACTOR shall secure the Picnic Table - ADA, and provide proof of delivery to the Engineer, within forty (40) working days after the Award of Contract.

D. Picnic Table - ADA shall be located per the Contract Plans, and as approved by the Engineer and CITY Parks Supervisor.

E. Payment shall be based on the Unit Price and actual quantities installed, complete in place. No additional compensation will be allowed. Measurement and Payment shall be in accordance with Article 41 through 43 in the General Provisions of these Contract Documents.

32. PET WASTE CONTAINER (ITEM NO. 33)

A. The work required for Provide and Install Pet Waste Container shall conform to Section 329320 of the Technical Specifications and as amended in these Contract Documents.

B. These work items consists of providing all labor, tools, equipment, materials, and any other necessary items to provide and install **PET WASTE CONTAINER** as detailed on the Construction Plans and these Contract Documents.

C. In accordance with Sections 8 and 9 of the General Conditions in these Contract Documents, CONTRACTOR shall provide shop drawings for the Pet Waste Container within fifteen (15) working after the Award of Contract. In addition, CONTRACTOR shall secure the Pet Waste Container, and provide proof of delivery to the Engineer, within forty (40) working days after the Award of Contract.

D. Pet Waste Container shall be located per the Contract Plans, and as approved by the Engineer and CITY Parks Supervisor.

E. Payment shall be based on the Unit Price and actual quantities installed, complete in place. No additional compensation will be allowed. Measurement and Payment shall be in accordance

with Article 41 through 43 in the General Provisions of these Contract Documents.

33. <u>BIRDHOUSE (ITEM NO. 34)</u>

C. The work required for Provide and Install Birdhouse shall conform to Section 329320 of the Technical Specifications and as amended in these Contract Documents.

D. These work items consists of providing all labor, tools, equipment, materials, and any other necessary items to provide and install **BIRDHOUSE** as detailed on the Construction Plans and these Contract Documents.

D. In accordance with Sections 8 and 9 of the General Conditions in these Contract Documents, CONTRACTOR shall provide shop drawings for the Birdhouse within fifteen (15) working after the Award of Contract. In addition, CONTRACTOR shall secure the Birdhouse, and provide proof of delivery to the Engineer, within forty (40) working days after the Award of Contract.

F. Birdhouse shall be located per the Contract Plans, and as approved by the Engineer and CITY Parks Supervisor.

G. Payment shall be based on the Unit Price and actual quantities installed, complete in place. No additional compensation will be allowed. Measurement and Payment shall be in accordance with Article 41 through 43 in the General Provisions of these Contract Documents.

LANDSCAPE AND IRRIGATION IMPROVEMENTS

34. <u>AUTOMATIC IRRIGATION SYSTEM (ITEM NO. 35)</u>

A. The work required for Provide and Install Automatic Irrigation System shall conform to Section 328400 of the Technical Specifications and as amended in these Contract Documents.

B. Payment for the construction of automatic irrigation system shall be paid at the Contract unit price per square foot as set forth in Bid Schedule for **AUTOMATIC IRRIGATION SYSTEM**. Payment shall include, but is not limited to, all other labor,

materials, tools, and equipment required for the installation of the automatic irrigation system.

C. Payment shall be based on the Unit Price and actual quantities installed, complete in place. No additional compensation will be allowed. Measurement and Payment shall be in accordance with Article 41 through 43 in the General Provisions of these Contract Documents.

35. CONTROLLER (ITEM NO. 36)

A. Controllers will be measured as each unit installed, complete in place, on an individual unit basis.

B. Payment for Controller will be made at the Unit Price named in the Bid Schedule for **CONTROLLER.** Contractor shall refer to Electrical and Civil plans for electrical locations and Irrigation Plans for installation details of the Controller.

C. The Contract Unit Price for Controller shall include full compensation for furnishing of all labor materials, tools, equipment, and incidentals including, but not limited to, excavation, sub-grade preparation, backfill, and for doing all work involved, complete in place as shown on the plan, as specified in these special provisions, and as directed by the Engineer.

D. Payment shall be based on the Unit Price and actual quantities installed, complete in place. No additional compensation will be allowed. Measurement and Payment shall be in accordance with Article 41 through 43 in the General Provisions of these Contract Documents.

36. SOIL PREPARATION, WEED ABATEMENT AND FINE GRADING (ITEM NO. 37)

A. Soil preparation, weed abatement and fine grading shall be constructed in accordance with Sections 312000 and 329113 of the Technical Specifications and will be measured as each unit installed, complete in place, on a square foot basis.

B. Payment for **SOIL PREPARATION, WEED ABATEMENT AND FINE GRADING** shall be made at the square foot price named in the Bid Schedule. The Fine Grading shall be installed to the

lines and grades shown on the plans and details, and in conformance with the specifications.

C. The Contract Unit Price shall include full compensation for furnishing of all labor materials, tools, equipment, and incidentals, and for doing all the work involved, complete in place as shown on the plans, as specified in these special provisions and as directed by the Engineer.

D. Payment shall be based on the Unit Price and actual quantities installed, complete in place. No additional compensation will be allowed. Measurement and Payment shall be in accordance with Article 41 through 43 in the General Provisions of these Contract Documents.

37. SEEDED TURF (ITEM NO. 38)

A. Seeded turf shall be constructed in accordance with Section 329100 of the Technical Specifications and will be measured as each unit installed, complete in place, on a square foot basis.

B. Payment for **SEEDED TURF** shall be made at the square foot price named in the Bid Schedule. The seeded turf shall be installed to the lines and grades shown on the plans and details, and in conformance with the specifications.

C. The Contract Unit Price shall include full compensation for furnishing of all labor, materials, tools, equipment, and incidentals, to include but not limited to, plant pit excavation, removal of plant pit spoils, amended backfill, mulching, and for doing all the work involved, complete in place as shown on the plans, as specified in these special provisions, and as directed by the Engineer.

D. Payment shall be based on the Unit Price and actual quantities installed, complete in place. No additional compensation will be allowed. Measurement and Payment shall be in accordance with Article 41 through 43 in the General Provisions of these Contract Documents.

38. NO-MOW TURF (ITEM NO. 39)

A. No-mow turf shall be constructed in accordance with Section 329100 of the Technical Specifications and will be measured as each unit installed, complete in place, on a square foot basis.

B. Payment for **NO-MOW TURF** shall be made at the square foot price named in the Bid Schedule. The no-mow turf shall be installed to the lines and grades shown on the plans and details, and in conformance with the specifications.

C. The Contract Unit Price shall include full compensation for furnishing of all labor, materials, tools, equipment, and incidentals, to include but not limited to, plant pit excavation, removal of plant pit spoils, amended backfill, mulching, and for doing all the work involved, complete in place as shown on the plans, as specified in these special provisions, and as directed by the Engineer.

D. Payment shall be based on the Unit Price and actual quantities installed, complete in place. No additional compensation will be allowed. Measurement and Payment shall be in accordance with Article 41 through 43 in the General Provisions of these Contract Documents.

39. <u>3" THICK MULCH LAYER (ITEM NO. 40)</u>

A. 3" Thick Mulch Layer shall be constructed in accordance with Sections 015639, 329200 and 329300 of the Technical Specifications and will be measured as each unit installed, complete in place, on a square foot basis.

B. Payment for **3" THICK MULCH LAYER** shall be made at the square foot price named in the Bid Schedule. Mulch shall be installed to the lines and grades shown on the plans and details, and in conformance with the specifications. The Contract Unit Price shall include full compensation for furnishing of all labor materials, tools, equipment, and incidentals, and for doing all the work involved, complete in place as shown on the plans, as specified in these special provisions and as directed by the Engineer.

C. Payment shall be based on the Unit Price and actual quantities installed, complete in place. No additional compensation will be allowed. Measurement and Payment shall be in accordance

with Article 41 through 43 in the General Provisions of these Contract Documents.

40. 24" BOX TREE (ITEM NO. 41)

A. 24" box tree shall be installed in accordance with Sections 015639, 329113 and 329300 of the Technical Specifications and will be measured as each unit installed, complete in place, on an individual unit basis.

B. Payment for 24" Box Trees will be made at the Unit Price named in the Bid Schedule for **24" BOX TREE** shall be furnished and installed to the lines and grades shown on the plans, and in conformance with the project details and specifications.

C. The Contract Unit Price for 24" Box Trees shall include full compensation for furnishing of all labor, materials, tools, equipment, and incidentals, to include but not limited to, plant pit excavation, removal of plant pit spoils, amended backfill, fertilizers, tree ties and staking, mulching, and for doing all the work involved, complete in place as shown on the plans, as specified in these special provisions, and as directed by the Engineer.

D. Payment shall be based on the Unit Price and actual quantities installed, complete in place. No additional compensation will be allowed. Measurement and Payment shall be in accordance with Article 41 through 43 in the General Provisions of these Contract Documents.

41. 5 GALLON SHRUB (ITEM NO. 42)

A. 5 gallon shrub shall be installed in accordance with Sections 015639, 329113 and 329300 of the Technical Specifications and will be measured as each unit installed, complete in place, on an individual unit basis.

B. Payment for 5 gallon shrubs will be made at the Unit Price named in the Bid Schedule for **5 GALLON SHRUB** shall be furnished and installed to the lines and grades shown on the plans, and in conformance with the project details and specifications.

C. The Contract Unit Price for 5 gallon shrubs shall include full compensation for furnishing of all labor, materials, tools, equipment, and incidentals, to include but not limited to, plant pit excavation, removal of plant pit spoils, amended backfill, mulching, and for doing all the work involved, complete in place as shown on the plans, as specified in these special provisions, and as directed by the Engineer.

D. Payment shall be based on the Unit Price and actual quantities installed, complete in place. No additional compensation will be allowed. Measurement and Payment shall be in accordance with Article 41 through 43 in the General Provisions of these Contract Documents.

42. 1 GALLON SHRUB (ITEM NO. 43)

A. 1 gallon shrub shall be installed in accordance with Sections 015639, 329113 and 329300 of the Technical Specifications and will be measured as each unit installed, complete in place, on an individual unit basis.

B. Payment for 1 gallon shrubs will be made at the Unit Price named in the Bid Schedule for **1 GALLON SHRUB** shall be furnished and installed to the lines and grades shown on the plans, and in conformance with the project details and specifications.

C. The Contract Unit Price for 1 gallon shrubs shall include full compensation for furnishing of all labor, materials, tools, equipment, and incidentals, to include but not limited to, plant pit excavation, removal of plant pit spoils, amended backfill, mulching, and for doing all the work involved, complete in place as shown on the plans, as specified in these special provisions, and as directed by the Engineer.

D. Payment shall be based on the Unit Price and actual quantities installed, complete in place. No additional compensation will be allowed. Measurement and Payment shall be in accordance with Article 41 through 43 in the General Provisions of these Contract Documents.

43. 4" POT (ITEM NO. 44)

A. 4” pot shall be installed in accordance with Sections 015639, 329113 and 329300 of the Technical Specifications and will be measured as each unit installed, complete in place, on an individual unit basis.

B. Payment for 4” pot will be made at the Unit Price named in the Bid Schedule for **4” POT** shall be furnished and installed to the lines and grades shown on the plans, and in conformance with the project details and specifications.

C. The Contract Unit Price for 4” pot shrubs shall include full compensation for furnishing of all labor, materials, tools, equipment, and incidentals, to include but not limited to, plant pit excavation, removal of plant pit spoils, amended backfill, mulching, and for doing all the work involved, complete in place as shown on the plans, as specified in these special provisions, and as directed by the Engineer.

D. Payment shall be based on the Unit Price and actual quantities installed, complete in place. No additional compensation will be allowed. Measurement and Payment shall be in accordance with Article 41 through 43 in the General Provisions of these Contract Documents.

44. PLUG LINER (ITEM NO. 45)

A. Plug Liner be installed in accordance with Sections 015639, 329113 and 329300 of the Technical Specifications and will be measured as each unit installed, complete in place, on an individual unit basis.

B. Payment for plug liner will be made at the Unit Price named in the Bid Schedule for **PLUG LINER** shall be furnished and installed to the lines and grades shown on the plans, and in conformance with the project details and specifications.

C. The Contract Unit Price for plug liner shrubs shall include full compensation for furnishing of all labor, materials, tools, equipment, and incidentals, to include but not limited to, plant pit excavation, removal of plant pit spoils, amended backfill, mulching, and for doing all the work involved, complete in place as shown on the plans, as specified in these special provisions, and as directed by the Engineer.

D. Payment shall be based on the Unit Price and actual quantities installed, complete in place. No additional compensation will be allowed. Measurement and Payment shall be in accordance with Article 41 through 43 in the General Provisions of these Contract Documents.

45. RELOCATE AND PLANT EXISTING TREES AND MEMORIAL PLAQUES WITH ADDITION OF GPS COORDINATES (ITEM NO. 46)

A. Relocate and plant existing trees shall be installed in accordance with Sections 015639, 329113 and 329300 of the Technical Specifications and will be measured as each unit installed, complete in place, on an individual unit basis.

D. Payment for relocate existing trees and memorial plaques will be made at the Unit Price named in the Bid Schedule for **RELOCATE AND PLANT EXISTING TREES AND MEMORIAL PLAQUES WITH ADDITION OF GPS COORDINATES** shall be furnished and installed at the locations shown on the plans, and in conformance with the project details and specifications.

E. The Contract Unit Price for relocating the existing trees and memorial plaques shall include full compensation for furnishing of all labor, materials, tools, equipment, and incidentals, to include but not limited to, plant pit excavation, removal of plant pit spoils, amended backfill, fertilizers, tree ties and staking, mulching, and for doing all the work involved, complete in place as shown on the plans, as specified in these special provisions, and as directed by the Engineer.

E. Payment shall be based on the Unit Price and actual quantities installed, complete in place. No additional compensation will be allowed. Measurement and Payment shall be in accordance with Article 41 through 43 in the General Provisions of these Contract Documents.

46. 90 DAY PLANT ESTABLISHMENT AND MAINTENANCE PERIOD (ITEM NO. 47)

A. The work required for the Provide and Install Automatic Irrigation System shall conform to Sections 328400, 329113, 329200, and 329300 of the Technical Specifications and as amended in these Contract Documents.

B. No measurement shall be made for this item.

C. Payment for this item will be made at the lump sum price named in the Bid Schedule for **90 DAY PLANT ESTABLISHMENT AND MAINTENANCE PERIOD**, which price shall constitute full compensation for furnishing all labor, materials, equipment, water usage, all watering, irrigation repair, weeding, mowing, edging, cultivating, mulching, spraying, and pruning as necessary to keep the plant material in a healthy growing condition, tools and incidentals and for doing all the work involved as indicated on the drawings and described in the specifications.

D. Payment shall be based on the approved schedule of values in accordance with the “Schedule of Values”. No additional compensation will be allowed.

LAKE REFURBISHMENT (DELETABLE)

48. REMOVAL & RECONSTRUCTION OF EXISTING STORM DRAIN OVERFLOW INLET AND SD CONNECTION(ITEM NO. 48)

A. No measurement will be made for this item.

B. The work required for Removal & Reconstruction of Existing Storm Drain Overflow Inlet and SD Connection shall include the removal of existing storm drain overflow inlet, construction of new overflow inlet and SD connection as indicated on the Contract Plans. The Storm drain inlet shall be constructed at the location and grade shown on the utility drawings included as part of the precise grading plan set.

C. Payment shall be based on the approved schedule of values in accordance with the “Schedule of Values”.

49. POND DRAINAGE INCLUDING CONNECTION & PERMITS FROM ETWD (ITEM NO. 49)

A. No measurement will be made for this item.

B. The work required for Pond Drainage shall include full compensation for furnishing all labor, materials, tools, equipment, traffic control, permits and incidentals performing all the work related to draining of the pond as described in the Drainage Notes on L-3 and L-4 of the Contract Plans,

C. Contractor shall apply for a discharge permit from El Toro Water District (ETWD) for discharge into the sanitary sewer. The cost of the permit shall be paid for by the City. ETWD shall provide the contractor with the location of the sewer manhole where the pond water may be discharged.

D. ETWD shall have sole discretion in directing the contractor to the flow rates and times when the pond water may be discharged to the ETWD sewer system.

E. The Contractor shall be responsible for any and all traffic control and protective devices required by ETWD for discharge into the ETWD sewer system.

F. Contractor shall coordinate with the City's Wildlife consultant regarding the emptying of the pond. The Contractor shall, at the direction of the City's wildlife consultant, suspend pumping activities in order to allow for the collection of any animals and fish by the City's Wildlife consultant.

G. Payment shall be based on the approved schedule of values in accordance with the "Schedule of Values". No additional compensation will be allowed.

50. <u>POND SEDIMENT DEWATERING AND DISPOSAL OF MATERIALS (EST 2,700 CY) (ITEMS NO. 50)</u>

A. No measurement will be made for this item.

B. The work required for pond sediment dewatering shall include full compensation for furnishing all labor, materials, tools, equipment, traffic control, permits and incidentals performing

all the work related to the dewatering and disposal of the pond sediment as described in the Drainage Notes on L-3 and L-4 of the Contract Plans.

C. The Contractor shall be responsible for all costs associated for each disposal method specified, including hauling and landfill fees, enzyme addition, sediment disposal dewatering bags, or soil amendments, depending on which method is selected by the City.

D. Payment shall be based on the approved schedule of values in accordance with the "Schedule of Values". No additional compensation will be allowed.

51. FLOATING ISLAND (ITEM NO. 51)

A. No measurement will be made for this item.

B. The work required for provide and Install Floating Island shall conform to the specifications called out in the Appendices and as amended in these Contract Documents.

C. These work items consists of providing all labor, tools, equipment, materials, and any other necessary items to provide and install **FLOATING ISLAND** as detailed on the Construction Plans and these Contract Documents.

D. In accordance with Sections 8 and 9 of the General Conditions in these Contract Documents, CONTRACTOR shall provide shop drawings for the floating island within fifteen (15) working after the Award of Contract. In addition, CONTRACTOR shall secure the floating island, and provide proof of delivery to the Engineer, within forty (40) working days after the Award of Contract.

E. The floating island shall be located per the Contract Plans, and as approved by the Engineer and CITY Parks Supervisor.

F. Payment shall be based on the approved schedule of values in accordance with the "Schedule of Values". No additional compensation will be allowed.

52. FLOATING FOUNTAINS (ITEM NO. 52)

A. No measurement will be made for this item.

B. The work required for provide and Install Floating Fountains shall conform to the details in the Contract Plans.

C. These work items consists of providing all labor, tools, equipment, materials, and any other necessary items to provide and install **FLOATING FOUNTAINS** as shown in Detail C on Sheet W252 of the Construction Plans.

D. In accordance with Sections 8 and 9 of the General Conditions in these Contract Documents, CONTRACTOR shall provide shop drawings for the floating fountains within fifteen (15) working after the Award of Contract. In addition, CONTRACTOR shall secure the floating fountains, and provide proof of delivery to the Engineer, within forty (40) working days after the Award of Contract.

E. The floating fountains shall be located per the Contract Plans, and as approved by the Engineer and CITY Parks Supervisor.

F. Payment shall be based on the approved schedule of values in accordance with the “Schedule of Values”. No additional compensation will be allowed.

53. FILTER (ITEM NO. 53)

A. No measurement will be made for this item.

B. The workfor this item shall consist of providing all labor, tools, equipment, materials, and any other necessary items to provide and install **FILTER** as detailed on the Construction Plans and in these Contract Documents.

C. In accordance with Sections 8 and 9 of the General Conditions in these Contract Documents, CONTRACTOR shall provide shop drawings for the filter within fifteen (15) working after the

Award of Contract. In addition, CONTRACTOR shall secure the filter, and provide proof of delivery to the Engineer, within forty (40) working days after the Award of Contract.

D. Payment shall be based on the approved schedule of values in accordance with the "Schedule of Values". No additional compensation will be allowed.

54. CAST IN-PLACE VAULT PUMP STATION (ITEM NO.54A) and PRE-CAST VAULT (ITEM NO. 54B – ADD ALTERNATE)

A. No measurement will be made for this item.

B. The work for this item shall consist of providing all labor, tools, equipment, materials, and any other necessary items to provide and install **CAST IN-PLACE VAULT PUMP STATION** as detailed on the Construction Plans and in these Contract Documents.

C. In accordance with Sections 8 and 9 of the General Conditions in these Contract Documents, CONTRACTOR shall provide shop drawings for the Cast In-Place Vault Pump Station within fifteen (15) working after the Award of Contract. In addition, CONTRACTOR shall secure the all appurtenances and materials needed for the cast in-place pump station, and provide proof of delivery to the Engineer, within forty (40) working days after the Award of Contract.

D. The Cast In-Place Vault Pump Station shall be located per the Contract Plans, and as approved by the Engineer and CITY Parks Supervisor.

E. Payment shall be based on the approved schedule of values in accordance with the "Schedule of Values". No additional compensation will be allowed.

55. INSTALLATION OF NEW PUMP (ITEM NO. 55)

A. No measurement will be made for this item.

B. The workfor this item shall consist of providing all labor, tools, equipment, materials, and any other necessary items to provide

the **INSTALLATION OF NEW PUMP** as detailed on the Construction Plans and in these Contract Documents.

C. In accordance with Sections 8 and 9 of the General Conditions in these Contract Documents, CONTRACTOR shall provide shop drawings for the installation of new pump within fifteen (15) working after the Award of Contract. In addition, CONTRACTOR shall secure the new pump, and provide proof of delivery to the Engineer, within forty (40) working days after the Award of Contract.

D. The Cast In-Place Vault Pump Station shall be located per the Contract Plans, and as approved by the Engineer and CITY Parks Supervisor.

E. Payment shall be based on the approved schedule of values in accordance with the "Schedule of Values". No additional compensation will be allowed.

56. PIPING (INCLUDING INSTALLATION OF DISCHARGE & SUCTION LINES AND SCREENS) (ITEM NO. 56)

A. No measurement will be made for this item.

B. The work for this item shall consist of providing all labor, tools, equipment, materials, and any other necessary items to provide the **PIPING (INCLUDING INSTALLATION OF DISCHARGE & SUCTION LINES AND SCREENS)** as detailed on the Construction Plans and in these Contract Documents.

C. In accordance with Sections 8 and 9 of the General Conditions in these Contract Documents, CONTRACTOR shall provide any shop drawings related to the piping within fifteen (15) working after the Award of Contract. In addition, CONTRACTOR shall secure the all appurtenances and materials needed for the piping, and provide proof of delivery to the Engineer, within forty (40) working days after the Award of Contract.

D. All piping shall be located per the Contract Plans, and as approved by the Engineer and CITY Parks Supervisor.

E. Payment shall be based on the approved schedule of values in accordance with the "Schedule of Values". No additional

compensation will be allowed.

57. SALVAGE & RE-USE OF AERATION EQUIPMENT (ITEM NO. 57)

A. No measurement will be made for this item.

B. The work for this item shall consist of providing all labor, tools, equipment, materials, and any other necessary items to protecti in place/salvage and store the existing aeration equipment until such time as the CONTRACTOR would install/reconnect the **AERATION EQUIPMENT FOR RE-USE** as detailed on the Construction Plans and in these Contract Documents.

C. In accordance with Sections 8 and 9 of the General Conditions in these Contract Documents, CONTRACTOR shall provide any shop drawings related to the re-use of the aeration equipment within fifteen (15) working after the Award of Contract. In addition, CONTRACTOR shall secure the all appurtenances and materials needed for the aeration equipment, and provide proof of delivery to the Engineer, within forty (40) working days after the Award of Contract.

D. All aeration equipment shall be located per the Contract Plans, and as approved by the Engineer and CITY Parks Supervisor.

E. Payment shall be based on the approved schedule of values in accordance with the “Schedule of Values”. No additional compensation will be allowed.

58. INSTALLATION OF ALUM ADDITION SYSTEM (ITEM NO. 58)

A. No measurement will be made for this item.

B. The work for this item shall consist of providing all labor, tools, equipment, materials, and any other necessary items to provide the **INSTALLATION OF ALUM ADDITION SYSTEM** as detailed on the Construction Plans and in these Contract Documents.

C. In accordance with Sections 8 and 9 of the General Conditions in these Contract Documents, CONTRACTOR shall provide shop drawings for the installation of alum addition system within

fifteen (15) working after the Award of Contract. In addition, CONTRACTOR shall secure the alum addition system, and provide proof of delivery to the Engineer, within forty (40) working days after the Award of Contract.

D. The Cast In-Place Vault Pump Station shall be located per the Contract Plans, and as approved by the Engineer and CITY Parks Supervisor.

E. Payment shall be based on the approved schedule of values in accordance with the "Schedule of Values". No additional compensation will be allowed.

59. MISCELLANEOUS PUMP STATION APPURTENANCES (FITTINGS, LADDER, LIGHTS , ETC) (ITEM NO. 59)

A. No measurement will be made for this item.

B. The work for this item shall consist of providing all labor, tools, equipment, materials, and any other necessary items to provide the **MISCELLANEOUS APPURTENANCES (FITTINGS, LADDER, LIGHTS, ETC.)** as detailed on sheets W200 through W501 of the Construction Plans and in these Contract Documents.

C. In accordance with Sections 8 and 9 of the General Conditions in these Contract Documents, CONTRACTOR shall provide any shop drawings related to the miscellaneous appurtenances (fittings) within fifteen (15) working after the Award of Contract. In addition, CONTRACTOR shall secure the all appurtenances and materials needed for the miscellaneous appurtenances (fittings), and provide proof of delivery to the Engineer, within forty (40) working days after the Award of Contract.

D. All miscellaneous appurtenances (fittings) shall be located per the Contract Plans, and as approved by the Engineer and CITY Parks Supervisor.

E. Payment shall be based on the approved schedule of values in accordance with the "Schedule of Values". No additional compensation will be allowed.

60. CONTROL PANEL & ELECTRICAL INSTALLATION (ITEM NO. 60)

A. No measurement will be made for this item.

B. The work for this item shall consist of providing all labor, tools, equipment, materials, and any other necessary items to provide the **CONTROL PANEL & ELECTRICAL INSTALLATION** as detailed on the Construction Plans and in these Contract Documents.

C. In accordance with Sections 8 and 9 of the General Conditions in these Contract Documents, CONTRACTOR shall provide any shop drawings related to the installation of the control panel & electrical installation within fifteen (15) working after the Award of Contract. In addition, CONTRACTOR shall secure the all appurtenances and materials needed for the control panel and electrical installation , and provide proof of delivery to the Engineer, within forty (40) working days after the Award of Contract.

D. All miscellaneous appurtenances (fittings) shall be located per the Contract Plans, and as approved by the Engineer and CITY Parks Supervisor.

E. Payment shall be based on the approved schedule of values in accordance with the “Schedule of Values”. No additional compensation will be allowed.

61. AUTOMATIC FILL (ITEM NO. 6)

A. No measurement will be made for this item.

B. The work for this item shall consist of providing all labor, tools, equipment, materials, and any other necessary items to provide the **AUTOMATIC FILL** as detailed on the Construction Plans and in these Contract Documents.

C. In accordance with Sections 8 and 9 of the General Conditions in these Contract Documents, CONTRACTOR shall provide

any shop drawings related to the installation of the Automatic Fill within fifteen (15) working after the Award of Contract. In addition, CONTRACTOR shall secure the all appurtenances and materials needed for the control panel and electrical installation , and provide proof of delivery to the Engineer, within forty (40) working days after the Award of Contract.

D. All miscellaneous appurtenances (fittings) shall be located per the Contract Plans, and as approved by the Engineer and CITY Parks Supervisor.

E. Payment shall be based on the approved schedule of values in accordance with the “Schedule of Values”. No additional compensation will be allowed.

END OF SPECIAL CONDITIONS

SECTION 00800
TECHNICAL SPECIFICATIONS

SECTION 015639 – TEMPORARY TREE AND PLANT PROTECTION

PART 1 - GENERAL

1.1 RELATED DOCUMENTS

A. Drawings and general provisions of the Contract, including General and Supplementary Conditions and Division 01 Specification Sections, apply to this Section.

1.2 SUMMARY

A. Section includes general protection and pruning of existing trees and plants that are affected by execution of the Work, whether temporary or permanent construction.

1.3 DEFINITIONS

A. Caliper: Diameter of a trunk measured by a diameter tape at a height 6 inches above the ground for trees up to and including 4-inch size at this height and as measured at a height of 12 inches above the ground for trees larger than 4-inch size.

B. Caliper (DBH): Diameter Breast Height; diameter of a trunk as measured by a diameter tape at a height 54 inches above the ground line for trees with caliper of 8 inches or greater as measured at a height of 12 inches above the ground.

C. Plant-Protection Zone: Area surrounding individual trees, groups of trees, shrubs, or other vegetation to be protected during construction and indicated on Drawings.

D. Tree-Protection Zone: Area surrounding individual trees or groups of trees to be protected during construction and defined by a circle concentric with each tree with a radius 1.5 times the diameter of the drip line unless otherwise indicated.

E. Vegetation: Trees, shrubs, groundcovers, grass, and other plants.

1.4 PREINSTALLATION MEETINGS

A. Preinstallation Conference: Conduct conference at Project site.

1. Review methods and procedures related to temporary tree and plant protection including, but not limited to, the following:

   a. Tree-service firm's personnel, and equipment needed to make progress and avoid delays.
   b. Arborist's responsibilities.
   c. Quality-control program.
   d. Coordination of Work and equipment movement with the locations of protection zones.
   e. Trenching by hand or with air spade within protection zones.
   f. Field quality control.

1.5 ACTION SUBMITTALS

A. Product Data: For each type of product.

B. Shop Drawings:

1. Include plans, elevations, sections, and locations of protection-zone fencing and signage, showing relation of equipment-movement routes and material storage locations with protection zones.
2. Detail fabrication and assembly of protection-zone fencing and signage.
3. Indicate extent of trenching by hand or with air spade within protection zones.

C. Samples: For each type of the following:

1. Organic Mulch: 1-quart volume of organic mulch; in sealed plastic bags labeled with composition of materials by percentage of weight and source of mulch.
2. Protection-Zone Fencing: Assembled Samples of manufacturer's standard size made from full-size components.
3. Protection-Zone Signage: Full-size Samples of each size and text, ready for installation.

D. Tree Pruning Schedule: Written schedule detailing scope and extent of pruning of trees to remain that interfere with or are affected by construction.

1. Species and size of tree.
2. Location on site plan. Include unique identifier for each.
3. Reason for pruning.

4. Description of pruning to be performed.
5. Description of maintenance following pruning.

1.6 INFORMATIONAL SUBMITTALS

A. Qualification Data: For arborist and tree service firm.

B. Certification: From arborist, certifying that trees indicated to remain have been protected during construction according to recognized standards and that trees were promptly and properly treated and repaired when damaged.

C. Maintenance Recommendations: From arborist, for care and protection of trees affected by construction during and after completing the Work.

D. Existing Conditions: Documentation of existing trees and plantings indicated to remain, which establishes preconstruction conditions that might be misconstrued as damage caused by construction activities.

1. Use sufficiently detailed photographs or video recordings.
2. Include plans and notations to indicate specific wounds and damage conditions of each tree or other plants designated to remain.

E. Quality-control program.

1.7 QUALITY ASSURANCE

A. Arborist Qualifications: Licensed arborist in jurisdiction where Project is located and approved by District.

B. Tree Service Firm Qualifications: An experienced tree service firm that has successfully completed temporary tree and plant protection work similar to that required for this Project and that will assign an experienced, qualified arborist to Project site during execution of the Work.

C. Quality-Control Program: Prepare a written program to systematically demonstrate the ability of personnel to properly follow procedures and handle materials and equipment during the Work without damaging trees and plantings. Include dimensioned diagrams for placement of protection zone fencing and signage, the arborist's and tree-service firm's responsibilities, instructions given to workers on the use and care of protection zones, and enforcement of requirements for protection zones.

1.8 FIELD CONDITIONS

A. The following practices are prohibited within protection zones:

1. Storage of construction materials, debris, or excavated material.
2. Moving or parking vehicles or equipment.
3. Foot traffic.
4. Erection of sheds or structures.
5. Impoundment of water.
6. Excavation or other digging unless otherwise indicated.
7. Attachment of signs to or wrapping materials around trees or plants unless otherwise indicated.

B. Do not direct vehicle or equipment exhaust toward protection zones.

C. Prohibit heat sources, flames, ignition sources, and smoking within or near protection zones and organic mulch.

PART 2 - PRODUCTS

2.1 MATERIALS

A. Backfill Soil: Planting soil of suitable moisture content and granular texture for placing around tree; free of stones, roots, plants, sod, clods, clay lumps, pockets of coarse sand, concrete slurry, concrete layers or chunks, cement, plaster, building debris, and other extraneous materials harmful to plant growth.

1. Planting Soil: Planting soil as specified in Section 32 91 13 "Soil Preparation."

B. Organic Mulch: as indicated on Drawings

C. Protection-Zone Fencing: Fencing fixed in position and meeting the following requirements:

1. Plastic Protection-Zone Fencing: Plastic construction fencing constructed of high-density extruded and stretched polyethylene fabric with 2-inch maximum opening in pattern and weighing a minimum of 0.4 lb/ft.; remaining flexible from minus 60 to plus 200 deg F; inert to most chemicals and acids; minimum tensile yield strength of 2000 psi and ultimate tensile strength of 2680 psi; secured with plastic bands or galvanized-steel or stainless-steel wire ties; and supported by tubular or T-shape galvanized-steel posts spaced not more than 96 inches apart.

a. Height: 48 inches.
b. Color: High-visibility orange, nonfading.

D. Protection-Zone Signage: Shop-fabricated, rigid plastic or metal sheet with attachment holes prepunched and reinforced; legibly printed with nonfading lettering and as follows:

1. Lettering: 3-inch high minimum, white characters on red background.

PART 3 - EXECUTION

3.1 EXAMINATION

A. Erosion and Sedimentation Control: Examine the site to verify that temporary erosion- and sedimentation-control measures are in place. Verify that flows of water redirected from construction areas or generated by construction activity do not enter or cross protection zones.

B. Prepare written report, endorsed by arborist, listing conditions detrimental to tree and plant protection.

3.2 PREPARATION

A. Locate and clearly identify trees, shrubs, and other vegetation to remain. Tie a 1-inch blue vinyl tape around each tree trunk at 54 inches above the ground.

B. Protect tree root systems from damage caused by runoff or spillage of noxious materials while mixing, placing, or storing construction materials. Protect root systems from ponding, eroding, or excessive wetting caused by dewatering operations.

C. Tree-Protection Zones: Mulch areas inside tree-protection zones and other areas indicated. Do not exceed indicated thickness of mulch.

1. Apply uniform thickness as indicated on Drawings of organic mulch. Do not place mulch within 6 inches of tree trunks.

3.3 PROTECTION ZONES

A. Protection-Zone Fencing: Install protection-zone fencing along edges of protection zones before materials or equipment are brought on the site and construction operations begin in a manner that will prevent people from easily

entering protected areas except by entrance gates. Construct fencing so as not to obstruct safe passage or visibility at vehicle intersections where fencing is located adjacent to pedestrian walkways or in close proximity to street intersections, drives, or other vehicular circulation.

B. Protection-Zone Signage: Install protection-zone signage in visibly prominent locations in a manner approved by Architect. Install one sign spaced approximately every 20 feet on protection-zone fencing, but no fewer than four signs with each facing a different direction.

C. Maintain protection zones free of weeds and trash.

D. Maintain protection-zone fencing and signage in good condition as acceptable to Architect and remove when construction operations are complete and equipment has been removed from the site.

1. Do not remove protection-zone fencing, even temporarily, to allow deliveries or equipment access through the protection zone.
2. Temporary access is permitted subject to preapproval in writing by arborist if a root buffer effective against soil compaction is constructed as directed by arborist. Maintain root buffer so long as access is permitted.

3.4 EXCAVATION

A. General: Excavate at edge of protection zones and for trenches indicated within protection zones unless otherwise indicated.

B. Trenching within Protection Zones: Where utility trenches are required within protection zones, excavate under or around tree roots by hand or with air spade, or tunnel under the roots by drilling, auger boring, or pipe jacking. Do not cut main lateral tree roots or taproots; cut only smaller roots that interfere with installation of utilities. Cut roots as required for root pruning. If excavating by hand, use narrow-tine spading forks to comb soil and expose roots.

C. Redirect roots in backfill areas where possible. If encountering large, main lateral roots, expose roots beyond excavation limits as required to bend and redirect them without breaking. If encountered immediately adjacent to location of new construction and redirection is not practical, cut roots approximately 3 inches back from new construction and as required for root pruning.

D. Do not allow exposed roots to dry out before placing permanent backfill. Provide temporary earth cover or pack with peat moss and wrap with burlap. Water and maintain in a moist condition. Temporarily support and protect roots from damage until they are permanently relocated and covered with soil.

3.5 ROOT PRUNING

A. Prune tree roots that are affected by temporary and permanent construction. Prune roots as follows:

1. Cut roots manually by digging a trench and cutting exposed roots with sharp pruning instruments; do not break, tear, chop, or slant the cuts. Do not use a backhoe or other equipment that rips, tears, or pulls roots.
2. Cut Ends: Do not paint cut root ends.
3. Temporarily support and protect roots from damage until they are permanently redirected and covered with soil.
4. Cover exposed roots with burlap and water regularly.
5. Backfill as soon as possible

B. Root Pruning at Edge of Protection Zone: Prune tree roots flush with the edge of the protection zone by cleanly cutting all roots to the depth of the required excavation.

C. Root Pruning within Protection Zone: Clear and excavate by hand or with air spade to the depth of the required excavation to minimize damage to tree root systems. If excavating by hand, use narrow-tine spading forks to comb soil to expose roots. Cleanly cut roots as close to excavation as possible.

3.6 CROWN PRUNING

A. Prune branches that are affected by temporary and permanent construction. Prune branches as directed by arborist.

1. Prune to remove only injured, broken, dying, or dead branches unless otherwise indicated. Do not prune for shape unless otherwise indicated.
2. Do not remove or reduce living branches to compensate for root loss caused by damaging or cutting root system.
3. Pruning Standards: Prune trees according to ANSI A300 (Part 1).

    a. Type of Pruning: Cleaning raising reducing and thinning where indicated.
    b. Specialty Pruning: Structural, palm utility where indicated.

B. Unless otherwise directed by arborist and acceptable to Architect, do not cut tree leaders.

C. Cut branches with sharp pruning instruments; do not break or chop.

D. Do not paint or apply sealants to wounds.

E. Provide subsequent maintenance pruning during Contract period as recommended by arborist.

F. Chip removed branches and dispose of off-site.

3.7 REGRADING

A. Lowering Grade: Where new finish grade is indicated below existing grade around trees, slope grade beyond the protection zone. Maintain existing grades within the protection zone.

B. Lowering Grade within Protection Zone: Where new finish grade is indicated below existing grade around trees, slope grade away from trees as recommended by arborist unless otherwise indicated.

1. Root Pruning: Prune tree roots exposed by lowering the grade. Do not cut main lateral roots or taproots; cut only smaller roots. Cut roots as required for root pruning.

C. Raising Grade: Where new finish grade is indicated above existing grade around trees, slope grade beyond the protection zone. Maintain existing grades within the protection zone.

D. Minor Fill within Protection Zone: Where existing grade is 2 inches or less below elevation of finish grade, fill with backfill soil. Place backfill soil in a single uncompacted layer and hand grade to required finish elevations.

3.8 FIELD QUALITY CONTROL

A. Inspections: Engage a qualified arborist to direct plant-protection measures in the vicinity of trees, shrubs, and other vegetation indicated to remain and to prepare inspection reports.

3.9 REPAIR AND REPLACEMENT

A. General: Repair or replace trees, shrubs, and other vegetation indicated to remain or to be relocated that are damaged by construction operations, in a manner approved by Architect.

1. Submit details of proposed pruning and repairs.
2. Perform repairs of damaged trunks, branches, and roots within 24 hours according to arborist's written instructions.

3. Replace trees and other plants that cannot be repaired and restored to full-growth status, as determined by Architect.

B. Trees: Remove and replace trees indicated to remain that are more than 25 percent dead or in an unhealthy condition before the end of the corrections period or are damaged during construction operations that Architect determines are incapable of restoring to normal growth pattern.

1. Small Trees: Provide new trees of same size and species as those being replaced for each tree that measures 6 inches or smaller in caliper size.
2. Large Trees: Provide one new tree of 6-inch caliper size for each tree being replaced that measures more than 6 inches in caliper size.

a. Species: As selected by Architect.

3. Plant and maintain new trees as specified in Section 32 93 00 "Plants."

C. Excess Mulch: Rake mulched area within protection zones, being careful not to injure roots. Rake to loosen and remove mulch that exceeds a 4-inch uniform thickness to remain.

D. Soil Aeration: Where directed by Architect, aerate surface soil compacted during construction. Aerate 10 feet beyond drip line and no closer than 36 inches to tree trunk. Drill 2-inch diameter holes a minimum of 12 inches deep at 24 inches o.c. Backfill holes with an equal mix of augered soil and sand.

3.10 DISPOSAL OF SURPLUS AND WASTE MATERIALS

A. Disposal: Remove excess excavated material, displaced trees, trash, and debris and legally dispose of them off Owner's property.

END OF SECTION 015639

SECTION 033000 - CAST-IN-PLACE CONCRETE

PART 1 - GENERAL

1.1 SUMMARY

A. Section includes cast-in-place concrete, including formwork, reinforcement, concrete materials, mixture design, placement procedures, and finishes.

B. Related Requirements:

1. Section 312000 "Earth Moving" for drainage fills under slabs-on-grade.

2. Lake Forest P.C.C. Sidewalk Standard 2.12

1.2 ACTION SUBMITTALS

A. Product Data: For each type of product.

B. Design Mixtures: For each concrete mixture.

C. Steel Reinforcement Shop Drawings: Placing Drawings that detail fabrication, bending, and placement.

1.3 INFORMATIONAL SUBMITTALS

A. Material certificates.

B. Material test reports.

C. Formwork Shop Drawings: Prepared by or under the supervision of a qualified professional engineer, detailing fabrication, assembly, and support of formwork.

D. Floor surface flatness and levelness measurements indicating compliance with specified tolerances.

1.4 QUALITY ASSURANCE

A. Manufacturer Qualifications: A firm experienced in manufacturing ready-mixed concrete products and that complies with ASTM C 94/C 94M requirements for production facilities and equipment.

1. Manufacturer certified according to NRMCA's "Certification of Ready Mixed Concrete Production Facilities."

B. Testing Agency Qualifications: If an independent agency is required it should be **acceptable to City of Lake Forest,** qualified according to ASTM C 1077 and ASTM E 329 for testing indicated.

1.5 PRECONSTRUCTION TESTING

A. No Preconstruction Testing Service is anticipated. Materials will be reviewed and accepted based on Material Certification and Material Test Report Submittals.

1.6 FIELD CONDITIONS

A. Cold-Weather Placement: Comply with ACI 306.1.

1. Do not use calcium chloride, salt, or other materials containing antifreeze agents or chemical accelerators unless otherwise specified and approved in mixture designs.

B. Hot-Weather Placement: Comply with ACI 301 (ACI 301M).

PART 2 - PRODUCTS

2.1 CONCRETE, GENERAL

A. ACI Publications: Comply with the following unless modified by requirements in the Contract Documents:

1. ACI 301 (ACI 301M).
2. ACI 117 (ACI 117M).

2.2 FORM-FACING MATERIALS

A. Smooth-Formed Finished Concrete: Form-facing panels that provide continuous, true, and smooth concrete surfaces. Furnish in largest practicable sizes to minimize number of joints.

B. Rough-Formed Finished Concrete: Plywood, lumber, metal, or another approved material. Provide lumber dressed on at least two edges and one side for tight fit.

2.3 STEEL REINFORCEMENT

A. Reinforcing Bars: ASTM A 615/A 615M, Grade 60 (Grade 420), deformed.

B. Low-Alloy-Steel Reinforcing Bars: ASTM A 706/A 706M, deformed.

C. Galvanized Reinforcing Bars: **ASTM A 615/A 615M, Grade 60 (Grade 420)** , deformed bars.

D. Epoxy-Coated Reinforcing Bars: **ASTM A 615/A 615M, Grade 60 (Grade 420)**] deformed bars, epoxy coated, with less than 2 percent damaged coating in each 12-inch (300-mm) bar length.

E. Plain-Steel Welded-Wire Reinforcement: ASTM A 1064/A 1064M, plain, fabricated from as-drawn steel wire into flat sheets.

F. Deformed-Steel Welded-Wire Reinforcement: ASTM A 1064/A 1064M, flat sheet.

G. Galvanized-Steel Welded-Wire Reinforcement: ASTM A 1064/A 1064M, plain, fabricated from galvanized-steel wire into flat sheets.

H. Epoxy-Coated Welded-Wire Reinforcement: ASTM A 884/A 884M, Class A coated, Type 1, **deformed** steel.

I. Bar Supports: Bolsters, chairs, spacers, and other devices for spacing, supporting, and fastening reinforcing bars and welded-wire reinforcement in place. Manufacture bar supports from steel wire, plastic, or precast concrete according to CRSI's "Manual of Standard Practice."

2.4 CONCRETE MATERIALS

A. Cementitious Materials:

1. Portland cement: ASTM C 150/C 150M, **Type V**, **gray**.
2. Fly Ash: **No fly Ash is allowed** .
3. Slag Cement: ASTM C 989/C 989M, Grade 100 or 120.
4. Blended Hydraulic Cement: ASTM C 595/C 595M, **Type IL, Portland-limestone** cement.

B. Normal-Weight Aggregates: ASTM C 33/C 33M, graded.

1. Maximum Coarse-Aggregate Size: **1-1/2 inches (38 mm)** nominal.
2. Fine Aggregate: Free of materials with deleterious reactivity to alkali in cement.

C. Lightweight Aggregate: ASTM C 330/C 330M, **1-inch (25-mm)** nominal maximum aggregate size.

D. Air-Entraining Admixture: ASTM C 260/C 260M.

E. Chemical Admixtures: Certified by manufacturer to be compatible with other admixtures and that do not contribute water-soluble chloride ions exceeding those permitted in hardened concrete. Do not use calcium chloride or admixtures containing calcium chloride.

1. Water-Reducing Admixture: ASTM C 494/C 494M, Type A.
2. Retarding Admixture: ASTM C 494/C 494M, Type B.
3. Water-Reducing and Retarding Admixture: ASTM C 494/C 494M, Type D.
4. High-Range, Water-Reducing Admixture: ASTM C 494/C 494M, Type F.
5. High-Range, Water-Reducing and Retarding Admixture: ASTM C 494/C 494M, Type G.
6. Plasticizing and Retarding Admixture: ASTM C 1017/C 1017M, Type II.

F. Water: ASTM C 94/C 94M **and potable**.

2.5 FIBER REINFORCEMENT

A. Synthetic Micro-Fiber: Monofilament polypropylene micro-fibers engineered and designed for use in concrete, complying with ASTM C 1116/C 1116M, Type III, **1/2 to 1-1/2 inches (13 to 38 mm)** long.

B. Synthetic Micro-Fiber: Fibrillated polypropylene micro-fibers engineered and designed for use in concrete, complying with ASTM C 1116/C 1116M, Type III, **1/2 to 1-1/2 inches (13 to 38 mm)** long.

2.6 WATERSTOPS

A. Flexible Rubber Waterstops: CE CRD-C 513, **with factory-installed metal eyelets,** for embedding in concrete to prevent passage of fluids through joints. Factory fabricate corners, intersections, and directional changes.

B. Chemically Resistant Flexible Waterstops: Thermoplastic elastomer rubber waterstops **with factory-installed metal eyelets**, for embedding in concrete to prevent passage of fluids through joints; resistant to oils, solvents, and chemicals. Factory fabricate corners, intersections, and directional changes.

C. Flexible PVC Waterstops: CE CRD-C 572,[**with factory-installed metal eyelets,** for embedding in concrete to prevent passage of fluids through joints. Factory fabricate corners, intersections, and directional changes.

D. Self-Expanding Butyl Strip Waterstops: Manufactured rectangular or trapezoidal strip, butyl rubber with sodium bentonite or other hydrophilic polymers, for adhesive bonding to concrete, 3/4 by 1 inch (19 by 25 mm).

E. Self-Expanding Rubber Strip Waterstops: Manufactured rectangular or trapezoidal strip, bentonite-free hydrophilic polymer-modified chloroprene rubber, for adhesive bonding to concrete, 3/8 by 3/4 inch (10 by 19 mm).

2.7 VAPOR RETARDERS

A. Sheet Vapor Retarder: ASTM E 1745, Class A. Include manufacturer's recommended adhesive or pressure-sensitive tape.

B. Sheet Vapor Retarder: ASTM E 1745, Class B. Include manufacturer's recommended adhesive or pressure-sensitive tape.

C. Sheet Vapor Retarder: ASTM E 1745, Class C. Include manufacturer’s recommended adhesive or pressure-sensitive joint tape.

D. Sheet Vapor Retarder: Polyethylene sheet, ASTM D 4397, not less than 10 mils (0.25 mm) thick.

2.8 CURING MATERIALS

A. Evaporation Retarder: Waterborne, monomolecular film forming, manufactured for application to fresh concrete.

B. Absorptive Cover: AASHTO M 182, Class 2, burlap cloth made from jute or kenaf, weighing approximately 10 oz./sq. yd. (305 g/sq. m) when dry.

C. Moisture-Retaining Cover: ASTM C 171, polyethylene film or white burlap-polyethylene sheet.

D. Water: Potable.

E. Clear, Waterborne, Membrane-Forming Curing Compound: ASTM C 309, Type 1, Class B, dissipating.

F. Clear, Waterborne, Membrane-Forming Curing Compound: ASTM C 309, Type 1, Class B, no dissipating

G. Verify with manufacturer that retained products have been tested against interference with bonding of floor covering.

H. Clear, Waterborne, Membrane-Forming Curing Compound: ASTM C 309, Type 1, Class B, 18 to 25 percent solids, no dissipating.

I. Clear, Solvent-Borne, Membrane-Forming Curing and Sealing Compound: ASTM C 1315, Type 1, Class A.

J. Clear, Waterborne, Membrane-Forming Curing and Sealing Compound: ASTM C 1315, Type 1, Class A.

2.9 RELATED MATERIALS

A. Expansion- and Isolation-Joint-Filler Strips: **ASTM D 1751, asphalt-saturated cellulosic fiber or ASTM D 1752, cork or self-expanding cork**.

2.10 CONCRETE MIXTURES, GENERAL

A. Prepare design mixtures for each type and strength of concrete, proportioned on the basis of laboratory trial mixture or field test data, or both, according to ACI 301 (ACI 301M).

B. Cementitious Materials: Use pozzolan, slag cement, and silica fume as needed to reduce the total amount of Portland cement, which would otherwise be used, by not less than 40 percent.

C. Admixtures: Use admixtures according to manufacturer's written instructions.

1. Use **water-reducing** admixture in concrete, as required, for placement and workability.
2. Use water-reducing and -retarding admixture when required by high temperatures, low humidity, or other adverse placement conditions.

3. Use water-reducing admixture in pumped concrete, concrete for heavy-use industrial slabs and parking structure slabs, concrete required to be watertight, and concrete with a w/c ratio below 0.50.

2.11 CONCRETE MIXTURES FOR BUILDING ELEMENTS

A. Normal-Weight Concrete:

1. Minimum Compressive Strength: **3500 psi (24.1 MPa)**> at 14 days.
2. Maximum W/C Ratio: **0.45**.
3. Slump Limit: **4 inches (100 mm)**, plus or minus 1 inch (25 mm).
4. Air Content: **5.5** percent, plus or minus 1.5 percent at point of delivery for 1-1/2-inch (38-mm) nominal maximum aggregate size.
5. Air Content: **6** percent, plus or minus 1.5 percent at point of delivery for **1-inch (25-mm)** nominal maximum aggregate size.
6. Air Content: Do not allow air content of trowel-finished floors to exceed 3 percent.

2.12 FABRICATING REINFORCEMENT

A. Fabricate steel reinforcement according to CRSI's "Manual of Standard Practice."

2.13 CONCRETE MIXING

A. Ready-Mixed Concrete: Measure, batch, mix, and deliver concrete according to ASTM C 94/C 94M **and ASTM C 1116/C 1116M**, and furnish batch ticket information.

1. When air temperature is between 85 and 90 deg F (30 and 32 deg C), reduce mixing and delivery time from 1-1/2 hours to 75 minutes; when air temperature is above 90 deg F (32 deg C), reduce mixing and delivery time to 60 minutes.

PART 3 - EXECUTION

3.1 FORMWORK INSTALLATION

A. Design, erect, shore, brace, and maintain formwork, according to ACI 301 (ACI 301M), to support vertical, lateral, static, and dynamic loads, and construction loads that might be applied, until structure can support such loads.

B. Construct formwork so concrete members and structures are of size, shape, alignment, elevation, and position indicated, within tolerance limits of ACI 117 (ACI 117M).

C. Chamfer exterior corners and edges of permanently exposed concrete.

3.2 EMBEDDED ITEM INSTALLATION

A. Place and secure anchorage devices and other embedded items required for adjoining work that is attached to or supported by cast-in-place concrete. Use setting drawings, templates, diagrams, instructions, and directions furnished with items to be embedded.

3.3 VAPOR-RETARDER INSTALLATION

A. Sheet Vapor Retarders: Place, protect, and repair sheet vapor retarder according to ASTM E 1643 and manufacturer's written instructions.

1. Lap joints 6 inches (150 mm) and seal with manufacturer's recommended tape.

3.4 STEEL REINFORCEMENT INSTALLATION

A. General: Comply with CRSI's "Manual of Standard Practice" for fabricating, placing, and supporting reinforcement.

1. Do not cut or puncture vapor retarder. Repair damage and reseal vapor retarder before placing concrete.

3.5 JOINTS

A. General: Construct joints true to line with faces perpendicular to surface plane of concrete.

B. Construction Joints: Install so strength and appearance of concrete are not impaired, at locations indicated or as approved by Architect.

C. Contraction Joints in Slabs-on-Grade: Form weakened-plane contraction joints, sectioning concrete into areas as indicated. Construct contraction joints for a depth equal to at least [**one-fourth**] <**Insert depth**> of concrete thickness as follows:

1. Grooved Joints: Form contraction joints after initial floating by grooving and finishing each edge of joint to a radius of 1/8 inch (3.2 mm). Repeat grooving of contraction joints after applying surface finishes. Eliminate groover tool marks on concrete surfaces.
2. Sawed Joints: Form contraction joints with power saws equipped with shatterproof abrasive or diamond-rimmed blades. Cut 1/8-inch- (3.2-mm-) wide joints into concrete when cutting action does not tear, abrade, or otherwise damage surface and before concrete develops random contraction cracks.

D. Isolation Joints in Slabs-on-Grade: After removing formwork, install joint-filler strips at slab junctions with vertical surfaces, such as column pedestals, foundation walls, grade beams, and other locations, as indicated.

3.6 WATERSTOP INSTALLATION

A. Waterstops: Install in construction joints and at other locations indicated, according to manufacturer's written instructions.

3.7 CONCRETE PLACEMENT

A. Before placing concrete, verify that installation of formwork, reinforcement, and embedded items is complete and that required inspections are completed.

B. Deposit concrete continuously in one layer or in horizontal layers of such thickness that no new concrete is placed on concrete that has hardened enough to cause seams or planes of weakness. If a section cannot be placed continuously, provide construction joints as indicated. Deposit concrete to avoid segregation.

1. Consolidate placed concrete with mechanical vibrating equipment according to ACI 301 (ACI 301M).

3.8 FINISHING FORMED SURFACES

A. Rough-Formed Finish: As-cast concrete texture imparted by form-facing material with tie holes and defects repaired and patched. Remove fins and other projections that exceed specified limits on formed-surface irregularities.

1. Apply to concrete surfaces **not exposed to public view**.

B. Smooth-Formed Finish: As-cast concrete texture imparted by form-facing material, arranged in an orderly and symmetrical manner with a minimum of

seams. Repair and patch tie holes and defects. Remove fins and other projections that exceed specified limits on formed-surface irregularities.

1. Apply to concrete surfaces **to be covered with a coating or covering material applied directly to concrete**.

C. Rubbed Finish: Apply the following to smooth-formed-finished as-cast concrete where indicated:

1. Smooth-Rubbed Finish: Not later than one day after form removal, moisten concrete surfaces and rub with carborundum brick or another abrasive until producing a uniform color and texture. Do not apply cement grout other than that created by the rubbing process.
2. Grout-Cleaned Finish: Wet concrete surfaces and apply grout of a consistency of thick paint to coat surfaces and fill small holes. Mix 1 part portland cement to 1-1/2 parts fine sand with a 1:1 mixture of bonding admixture and water. Add white portland cement in amounts determined by trial patches, so color of dry grout matches adjacent surfaces. Scrub grout into voids and remove excess grout. When grout whitens, rub surface with clean burlap and keep surface damp by fog spray for at least 36 hours.
3. Cork-Floated Finish: Wet concrete surfaces and apply a stiff grout. Mix 1 part portland cement and 1 part fine sand with a 1:1 mixture of bonding agent and water. Add white portland cement in amounts determined by trial patches, so color of dry grout matches adjacent surfaces. Compress grout into voids by grinding surface. In a swirling motion, finish surface with a cork float.

D. Related Unformed Surfaces: At tops of walls, horizontal offsets, and similar unformed surfaces adjacent to formed surfaces, strike off smooth and finish with a texture matching adjacent formed surfaces. Continue final surface treatment of formed surfaces uniformly across adjacent unformed surfaces unless otherwise indicated.

3.9 FINISHING FLOORS AND SLABS

A. General: Comply with ACI 302.1R recommendations for screeding, restraightening, and finishing operations for concrete surfaces. Do not wet concrete surfaces.

B. Scratch Finish: While still plastic, texture concrete surface that has been screeded and bull-floated or darbied. Use stiff brushes, brooms, or rakes to produce profile amplitude of 1/4 inch (6 mm) in one direction.

1. Apply scratch finish to surfaces **to receive concrete floor toppings**.

C. Float Finish: Consolidate surface with power-driven floats or by hand floating if area is small or inaccessible to power-driven floats. Restraighten, cut down high spots, and fill low spots. Repeat float passes and restraightening until surface is left with a uniform, smooth, granular texture.

D. Trowel Finish: After applying float finish, apply first troweling and consolidate concrete by hand or power-driven trowel. Continue troweling passes and restraighten until surface is free of trowel marks and uniform in texture and appearance. Grind smooth any surface defects that would telegraph through applied coatings or floor coverings.

1. Apply a trowel finish to surfaces **exposed to view or to be covered with resilient flooring, carpet, ceramic or quarry tile set over a cleavage membrane, paint, or another thin-film-finish coating system**
2. Finish and measure surface, so gap at any point between concrete surface and an unleveled, freestanding, 10-ft.- (3.05-m-) long straightedge resting on two high spots and placed anywhere on the surface does not exceed [**1/8 inch (3.2 mm)**].

E. Trowel and Fine-Broom Finish: Apply a first trowel finish to surfaces **where ceramic or quarry tile is to be installed by either thickset or thinset method**. While concrete is still plastic, slightly scarify surface with a fine broom.

1. Comply with flatness and levelness tolerances for trowel-finished floor surfaces.

F. Broom Finish: Apply a broom finish to exterior concrete platforms, steps, ramps, and elsewhere as indicated.

1. Immediately after float finishing, slightly roughen trafficked surface by brooming with fiber-bristle broom perpendicular to main traffic route. Coordinate required final finish with Architect before application.

3.10 CONCRETE PROTECTING AND CURING

A. General: Protect freshly placed concrete from premature drying and excessive cold or hot temperatures. Comply with ACI 306.1 for cold-weather protection and ACI 301 (ACI 301M) for hot-weather protection during curing.

B. Evaporation Retarder: Apply evaporation retarder to unformed concrete surfaces if hot, dry, or windy conditions cause moisture loss approaching 0.2 lb/sq. ft. x h (1 kg/sq. m x h) before and during finishing operations. Apply

according to manufacturer's written instructions after placing, screeding, and bull floating or darbying concrete, but before float finishing.

C. Formed Surfaces: Cure formed concrete surfaces, including underside of beams, supported slabs, and other similar surfaces. If forms remain during curing period, moist cure after loosening forms. If removing forms before end of curing period, continue curing for remainder of curing period.

D. Cure concrete according to ACI 308.1, by one or a combination of the following methods:

1. Moisture Curing: Keep surfaces continuously moist for not less than seven days.
2. Moisture-Retaining-Cover Curing: Cover concrete surfaces with moisture-retaining cover for curing concrete, placed in widest practicable width, with sides and ends lapped at least 12 inches (300 mm), and sealed by waterproof tape or adhesive. Cure for not less than seven days. Immediately repair any holes or tears during curing period, using cover material and waterproof tape.
3. Curing Compound: Apply uniformly in continuous operation by power spray or roller according to manufacturer's written instructions. Recoat areas subjected to heavy rainfall within three hours after initial application. Maintain continuity of coating and repair damage during curing period.

    a. Removal: After curing period has elapsed, remove curing compound without damaging concrete surfaces by method recommended by curing compound manufacturer[**unless manufacturer certifies curing compound does not interfere with bonding of floor covering used on Project**].

4. Curing and Sealing Compound: Apply uniformly to floors and slabs indicated in a continuous operation by power spray or roller according to manufacturer's written instructions. Recoat areas subjected to heavy rainfall within three hours after initial application. Repeat process 24 hours later and apply a second coat. Maintain continuity of coating and repair damage during curing period.

3.11 CONCRETE SURFACE REPAIRS

A. Defective Concrete: Repair and patch defective areas when approved by Architect. Remove and replace concrete that cannot be repaired and patched to Architect's approval.

3.12 FIELD QUALITY CONTROL

A. Special Inspections: No special Inspections are anticipated for this Project.

END OF SECTION 033000

SECTION 042000 - UNIT MASONRY

PART 1 - GENERAL

1.1 SUMMARY

A. Section Includes:

1. Concrete masonry units.
2. Pre-faced concrete masonry units.

1.2 ALLOWANCES

A. Face brick is part of the Face Brick Allowance.

1.3 DEFINITIONS

A. CMU(s): Concrete masonry unit(s).

B. Reinforced Masonry: Masonry containing reinforcing steel in grouted cells.

1.4 ACTION SUBMITTALS

A. Product Data: For each type of product.

B. Shop Drawings: For reinforcing steel. Detail bending, lap lengths, and placement of unit masonry reinforcing bars. Comply with ACI 315. **Show elevations of reinforced walls.**

C. Samples for Verification: For each type and color of **exposed masonry unit and colored mortar**.

1.5 INFORMATIONAL SUBMITTALS

A. Material Certificates: For each type and size of product. For masonry units, include **material test reports substantiating compliance with requirements**.

B. Mix Designs: For each type of mortar **and grout**. Include description of type and proportions of ingredients.

1. Include test reports for mortar mixes required to comply with property specification. Test according to ASTM C 109/C 109M for compressive strength, ASTM C 1506 for water retention, and ASTM C 91/C 91M for air content.
2. Include test reports, according to ASTM C 1019, for grout mixes required to comply with compressive strength requirement.

1.6 QUALITY ASSURANCE

A. Sample Panels: Build sample panels to verify selections made under Sample submittals and to demonstrate aesthetic effects. Comply with requirements in Section 014000 "Quality Requirements" for mockups.

1. Build sample panels for **each typical exterior wall** in sizes approximately as required by City of Lake Forest.

1.7 FIELD CONDITIONS

A. Cold-Weather Requirements: Do not use frozen materials or materials mixed or coated with ice or frost. Do not build on frozen substrates. Remove and replace unit masonry damaged by frost or by freezing conditions. Comply with cold-weather construction requirements contained in TMS 602/ACI 530.1/ASCE 6.

B. Hot-Weather Requirements: Comply with hot-weather construction requirements contained in TMS 602/ACI 530.1/ASCE 6.

C. Contractor is to protect an existing Wrought Iron Fence in Place as indicated on Sheets C-1 Section B-B and Sheet C-3 of the Civil Drawings. The Unit Cost of the Retaining Wall shall include the cost of protecting the existing Wrought Iron Fence in place.

PART 2 - PRODUCTS

2.1 UNIT MASONRY, GENERAL

A. Masonry Standard: Comply with TMS 602/ACI 530.1/ASCE 6, except as modified by requirements in the Contract Documents.

B. Defective Units: Referenced masonry unit standards may allow a certain percentage of units to contain chips, cracks, or other defects exceeding limits stated. Do not use units where such defects are exposed in the completed Work within 10 ft **horizontally of a walking surface**.

C. Fire-Resistance Ratings: Comply with requirements for fire-resistance-rated assembly designs indicated.

1. Where fire-resistance-rated construction is indicated, units shall be listed and labeled by a qualified testing agency acceptable to authorities having jurisdiction.

2.2 CONCRETE MASONRY UNITS

A. Shapes: Provide shapes indicated and as follows, with exposed surfaces matching exposed faces of adjacent units unless otherwise indicated.

1. Provide special shapes for lintels, corners, jambs, sashes, movement joints, headers, bonding, and other special conditions.

B. Integral Water Repellent: Provide units made with integral water repellent **for exposed units and where indicated**.

C. CMUs: ASTM C 90.

1. Unit Compressive Strength: Provide units with minimum average net-area compressive strength of 1800 **psi.**
2. Density Classification: **Normal weight**.

D. Decorative CMUs: ASTM C 90.
1. Unit Compressive Strength: Provide units with minimum average net-area compressive strength of **1800 psi** Density classification in "Density Classification" Subparagraph below affects appearance and water absorption. Verify availability of lightweight decorative CMUs before specifying.
2. Density Classification: **Normal weight**.
3. Pattern and Texture:

a. Standard pattern, ground-face finish.[**Match Landscape Architect's plans.**]
b. Standard pattern, split-face finish.[**Match Landscape Architect's plans.**]
c. Standard pattern, split-ribbed finish.[**Match Landscape Architect's plans.**]
d. Scored vertically, standard finish.[**Match Landscape Architect's plans.**]

2.3 CONCRETE LINTELS – NOT USED

2.4 BRICK – NOT USED

2.5 STRUCTURAL CLAY FACING TILE – NOT USED

2.6 MORTAR AND GROUT MATERIALS

A. Portland Cement: ASTM C 150/C 150M, Type I or II, except Type III may be used for cold-weather construction. Provide natural color or white cement as required to produce mortar color indicated.

B. Hydrated Lime: ASTM C 207, Type S.

C. Portland Cement-Lime Mix: Packaged blend of Portland cement and hydrated lime containing no other ingredients.

D. Masonry Cement: ASTM C 91/C 91M.

E. Mortar Pigments: Natural and synthetic iron oxides and chromium oxides, compounded for use in mortar mixes and complying with ASTM C 979/C 979M. Use only pigments with a record of satisfactory performance in masonry mortar.

F. Colored Cement Products: Packaged blend made from P**ortland cement and hydrated lime or masonry cement** and mortar pigments, all complying with specified requirements, and containing no other ingredients.

G. Aggregate for Mortar: ASTM C 144.

1. For joints less than 1/4 inch (6 mm) thick, use aggregate graded with 100 percent passing the No. 16 (1.18-mm) sieve.
2. White-Mortar Aggregates: Natural white sand or crushed white stone.
3. Colored-Mortar Aggregates: Natural sand or crushed stone of color necessary to produce required mortar color.

H. Aggregate for Grout: ASTM C 404.

I. Epoxy Pointing Mortar: ASTM C 395, epoxy-resin-based material formulated for use as pointing mortar for glazed or pre-faced masonry units (and approved for such use by manufacturer of units); in color indicated or, if not otherwise indicated, as selected by Architect from manufacturer's colors.

J. Cold-Weather Admixture: Nonchloride, noncorrosive, accelerating admixture complying with ASTM C 494/C 494M, Type C, and recommended by manufacturer for use in masonry mortar of composition indicated.

K. Water-Repellent Admixture: Liquid water-repellent mortar admixture intended for use with CMUs containing integral water repellent from same manufacturer.

L. Water: Potable.

2.7 REINFORCEMENT

A. Uncoated-Steel Reinforcing Bars: ASTM A 615/A 615M or ASTM A 996/A 996M, Grade 60 (Grade 420).

B. Masonry-Joint Reinforcement, General: ASTM A 951/A 951M.

2.8 TIES AND ANCHORS

2.9 EMBEDDED FLASHING MATERIALS

2.10 MISCELLANEOUS MASONRY ACCESSORIES

A. Compressible Filler: Premolded filler strips complying with ASTM D 1056, Grade 2A1; compressible up to 35 percent; of width and thickness indicated; formulated from **neoprene, urethane or PVC**.

B. Preformed Control-Joint Gaskets: Made from **styrene-butadiene-rubber compound, complying with ASTM D 2000, Designation M2AA-805 or PVC, complying with ASTM D 2287, Type PVC-65406** and designed to fit standard sash block and to maintain lateral stability in masonry wall; size and configuration as indicated.

C. Bond-Breaker Strips: Asphalt-saturated felt complying with ASTM D 226/D 226M, Type I (No. 15 asphalt felt).

D. Weep/Cavity Vent Products: Use **one of** the following unless otherwise indicated:

1. Cellular Plastic Weep/Vent: One-piece, flexible extrusion made from UV-resistant polypropylene copolymer, full height and width of head joint and depth 1/8 inch (3 mm) less than depth of outer wythe, in color selected from manufacturer's standard.

2. Mesh Weep/Vent: Free-draining mesh; made from polyethylene strands, full height and width of head joint and depth 1/8 inch (3 mm) less than depth of outer wythe; in color selected from manufacturer's standard.

3. Vinyl Weep Hole/Vent: Units made from flexible PVC, designed to fit into a head joint and consisting of a louvered vertical leg, flexible wings to seal against ends of masonry units, and a top flap to keep mortar out of the head joint; in color selected by Architect.

E. Cavity Drainage Material: Free-draining mesh, made from polymer strands that will not degrade within the wall cavity.
   1. Configuration: Provide one of the following:

      a. Strips, full depth of cavity and 10 inches (250 mm) high, with dovetail shaped notches 7 inches (175 mm) deep that prevent clogging with mortar droppings.
      b. Strips, not less than **1-1/2 inches (38 mm)** thick and 10 inches (250 mm) high, with dimpled surface designed to catch mortar droppings and prevent weep holes from clogging with mortar.
      c. Sheets or strips full depth of cavity and installed to full height of cavity.
      d. Sheets or strips not less than **3/4 inch (19 mm)** thick and installed to full height of cavity, with additional strips 4 inches (100 mm) high at weep holes and thick enough to fill entire depth of cavity and prevent weep holes from clogging with mortar.

2.11 MASONRY-CELL FILL

A. Loose-Fill Insulation: Perlite complying with ASTM C 549, Type II (surface treated for water repellency and limited moisture absorption) or Type IV (surface treated for water repellency and to limit dust generation).

B. Lightweight-Aggregate Fill: ASTM C 331/C 331M.

2.12 MASONRY CLEANERS

A. Proprietary Acidic Cleaner: Manufacturer's standard-strength cleaner designed for removing mortar/grout stains, efflorescence, and other new construction stains from new masonry without discoloring or damaging masonry surfaces. Use product expressly approved for intended use by cleaner manufacturer and manufacturer of masonry units being cleaned.

2.13 MORTAR AND GROUT MIXES

A. General: Do not use admixtures, including pigments, air-entraining agents, accelerators, retarders, water-repellent agents, antifreeze compounds, or other admixtures unless otherwise indicated.

1. Do not use calcium chloride in mortar or grout.
2. Use **Portland cement-lime or masonry cement** mortar unless otherwise indicated.
3. For exterior masonry, use **Portland cement-lime or masonry cement** mortar.
4. For reinforced masonry, use **Portland cement-lime or masonry cement**] mortar.
5. Add cold-weather admixture (if used) at same rate for all mortar that will be exposed to view, regardless of weather conditions, to ensure that mortar color is consistent.

B. Pre blended, Dry Mortar Mix: Furnish dry mortar ingredients in form of a pre blended mix. Measure quantities by weight to ensure accurate proportions, and thoroughly blend ingredients before delivering to Project site.

C. Mortar for Unit Masonry: Comply with ASTM C 270, Provide the following types of mortar for applications stated unless another type is indicated.

1. For masonry below grade or in contact with earth, use Type M.
2. For reinforced masonry, use T**ype M** or **Type S**.
3. For mortar parge coats, use **Type S or Type N**.
4. For exterior, above-grade, load-bearing and nonload-bearing walls and parapet walls; for interior load-bearing walls; for interior nonload-bearing partitions; and for other applications where another type is not indicated, use Type N.
5. For interior nonload-bearing partitions, Type O may be used instead of Type N.

D. Pigmented Mortar: Use colored cement product. D**o not add pigments to colored cement products**.

1. Pigments shall not exceed 10 percent of Portland cement by weight.
2. Pigments shall not exceed 5 percent of **masonry cement or mortar cement** by weight.
3. Mix to match Architect's sample.
4. Application: Use pigmented mortar for exposed mortar joints with the following units:

   a. Decorative CMUs.

b. Pre-faced CMUs.

E. Colored-Aggregate Mortar: Produce required mortar color by using colored aggregates and natural color or white cement as necessary to produce required mortar color.

1. Mix to match Architect's sample.
2. Application: Use colored-aggregate mortar for exposed mortar joints with the following units:

a. Decorative CMUs.
b. Pre-faced CMUs.

F. Grout for Unit Masonry: Comply with ASTM C 476.

1. Use grout of type indicated or, if not otherwise indicated, of type (fine or coarse) that will comply with TMS 602/ACI 530.1/ASCE 6 for dimensions of grout spaces and pour height.
2. Proportion grout in accordance with ASTM C 476, **Table 1 or paragraph 4.2.2 for specified 28-day compressive strength indicated, but not less than 2000 psi (14 MPa)**].
3. Provide grout with a slump of **8 to 11 inches (200 to 280 mm)** as measured according to ASTM C 143/C 143M.

G. Epoxy Pointing Mortar: Mix epoxy pointing mortar to comply with mortar manufacturer's written instructions.

1. Application: Use epoxy pointing mortar for exposed mortar joints with the following units:

a. Pre-faced CMUs.
b. Glazed structural clay facing tile.

PART 3 - EXECUTION

3.1 INSTALLATION, GENERAL

A. Use full-size units without cutting if possible. If cutting is required to provide a continuous pattern or to fit adjoining construction, cut units with motor-driven saws; provide clean, sharp, unchipped edges. Allow units to dry before laying unless wetting of units is specified. Install cut units with cut surfaces and, where possible, cut edges concealed.

B. Select and arrange units for exposed unit masonry to produce a uniform blend of colors and textures. Mix units from several pallets or cubes as they are placed.

C. Wetting of Brick: Wet brick before laying if initial rate of absorption exceeds 30 g/30 sq. in. (30 g/194 sq. cm) per minute when tested according to ASTM C 67. Allow units to absorb water so they are damp but not wet at time of laying.

3.2 TOLERANCES

A. Dimensions and Locations of Elements:

1. For dimensions in cross section or elevation, do not vary by more than plus 1/2 inch (12 mm) or minus 1/4 inch (6 mm).
2. For location of elements in plan, do not vary from that indicated by more than plus or minus 1/2 inch (12 mm).
3. For location of elements in elevation, do not vary from that indicated by more than plus or minus 1/4 inch (6 mm) in a story height or 1/2 inch (12 mm) total.

B. Lines and Levels:

1. For bed joints and top surfaces of bearing walls, do not vary from level by more than 1/4 inch in 10 feet (6 mm in 3 m), or 1/2-inch (12-mm) maximum.
2. For conspicuous horizontal lines, such as lintels, sills, parapets, and reveals, do not vary from level by more than 1/8 inch in 10 feet (3 mm in 3 m), 1/4 inch in 20 feet (6 mm in 6 m), or 1/2-inch (12-mm) maximum.
3. For vertical lines and surfaces, do not vary from plumb by more than 1/4 inch in 10 feet (6 mm in 3 m), 3/8 inch in 20 feet (9 mm in 6 m), or 1/2-inch (12-mm) maximum.
4. For conspicuous vertical lines, such as external corners, door jambs, reveals, and expansion and control joints, do not vary from plumb by more than 1/8 inch in 10 feet (3 mm in 3 m), 1/4 inch in 20 feet (6 mm in 6 m), or 1/2-inch (12-mm) maximum.
5. For lines and surfaces, do not vary from straight by more than 1/4 inch in 10 feet (6 mm in 3 m), 3/8 inch in 20 feet (9 mm in 6 m), or 1/2-inch (12-mm) maximum.

C. Joints:

1. For bed joints, do not vary from thickness indicated by more than plus or minus 1/8 inch (3 mm), with a maximum thickness limited to 1/2 inch (12 mm).

2. For head and collar joints, do not vary from thickness indicated by more than plus 3/8 inch (9 mm) or minus 1/4 inch (6 mm).
3. For exposed head joints, do not vary from thickness indicated by more than plus or minus 1/8 inch (3 mm).

3.3 LAYING MASONRY WALLS

A. Lay out walls in advance for accurate spacing of surface bond patterns with uniform joint thicknesses and for accurate location of openings, movement-type joints, returns, and offsets. Avoid using less-than-half-size units, particularly at corners, jambs, and, where possible, at other locations.

B. Bond Pattern for Exposed Masonry: Unless otherwise indicated, lay exposed masonry in running bond; do not use units with less-than-nominal 4-inch (100-mm) horizontal face dimensions at corners or jambs.

C. Built-in Work: As construction progresses, build in items specified in this and other Sections. Fill in solidly with masonry around built-in items.

D. Fill space between steel frames and masonry solidly with mortar unless otherwise indicated.

E. Fill cores in hollow CMUs with grout 24 inches (600 mm) under bearing plates, beams, lintels, posts, and similar items unless otherwise indicated.

3.4 MORTAR BEDDING AND JOINTING

A. Lay **CMUs** as follows:

1. Bed face shells in mortar and make head joints of depth equal to bed joints.
2. Bed webs in mortar in all courses of piers, columns, and pilasters.
3. Bed webs in mortar in grouted masonry, including starting course on footings.
4. Fully bed entire units, including areas under cells, at starting course on footings where cells are not grouted.

B. Lay solid masonry units with completely filled bed and head joints; butter ends with sufficient mortar to fill head joints and shove into place. Do not deeply furrow bed joints or slush head joints.

C. Lay structural clay tile as follows:

1. Lay vertical-cell units with full head joints unless otherwise indicated. Provide bed joints with full mortar coverage on face shells and webs.
2. Lay horizontal-cell units with full bed joints unless otherwise indicated. Keep drainage channels, if any, free of mortar. Form head joints with sufficient mortar so excess will be squeezed out as units are placed in position. Butter both sides of units to be placed, or butter one side of unit already in place and one side of unit to be placed.
3. Maintain joint thicknesses indicated except for minor variations required to maintain bond alignment. If not indicated, lay walls with 1/4- to 3/8-inch-(6- to 10-mm-) thick joints.

D. Rake out mortar joints at **pre-faced CMU's** to a uniform depth of 1/4 inch (6 mm) and point with epoxy mortar to comply with epoxy-mortar manufacturer's written instructions.

E. Tool exposed joints slightly concave when thumbprint hard, using a jointer larger than joint thickness unless otherwise indicated.

F. Cut joints flush for masonry walls to receive plaster or other direct-applied finishes (other than paint) unless otherwise indicated.

3.5 COMPOSITE MASONRY – NOT USED

3.6 CAVITY WALLS – NOT USED

3.7 MASONRY-CELL FILL

A. Pour **lightweight-aggregate fill** into cavities to fill void spaces. Maintain inspection ports to show presence of fill at extremities of each pour area. Close the ports after filling has been confirmed. Limit the fall of fill to one story high, but not more than 20 feet (6 m).

3.8 MASONRY-JOINT REINFORCEMENT

A. General: Install entire length of longitudinal side rods in mortar with a minimum cover of 5/8 inch (16 mm) on exterior side of walls, 1/2 inch (13 mm) elsewhere. Lap reinforcement a minimum of 6 inches (150 mm).

1. Space reinforcement not more than 16 inches (406 mm) o.c.
2. Space reinforcement not more than 8 inches (203 mm) o.c. in foundation walls and parapet walls.

3. Provide reinforcement not more than 8 inches (203 mm) above and below wall openings and extending 12 inches (305 mm) beyond openings **in addition to continuous reinforcement**.

B. Interrupt joint reinforcement at control and expansion joints unless otherwise indicated.

C. Provide continuity at wall intersections by using prefabricated T-shaped units.

D. Provide continuity at corners by using prefabricated L-shaped units.

3.9 ANCHORING MASONRY TO STRUCTURAL STEEL AND CONCRETE – NOT USED

3.10 FLASHING, WEEP HOLES, AND CAVITY VENTS

A. General: Install embedded flashing and weep holes in masonry at shelf angles, lintels, ledges, other obstructions to downward flow of water in wall, and where indicated.[**Install cavity vents at shelf angles, ledges, and other obstructions to upward flow of air in cavities, and where indicated.**]

B. Install flashing as follows unless otherwise indicated:

1. Prepare masonry surfaces so they are smooth and free from projections that could puncture flashing. Where flashing is within mortar joint, place through-wall flashing on sloping bed of mortar and cover with mortar. Before covering with mortar, seal penetrations in flashing with adhesive, sealant, or tape **as recommended by flashing manufacturer**.
2. At multiwythe masonry walls, including cavity walls, extend flashing through outer wythe, turned up a minimum of **4 inches (100 mm)**, and through inner wythe to within 1/2 inch (13 mm) of the interior face of wall in exposed masonry. Where interior face of wall is to receive furring or framing, carry flashing completely through inner wythe and turn flashing up approximately 2 inches (50 mm) on interior face.
3. At lintels and shelf angles, extend flashing a minimum of 6 inches (150 mm) into masonry at each end. At heads and sills, extend flashing 6 inches (150 mm) at ends and turn up not less than 2 inches (50 mm) to form end dams.
4. Install metal drip edges beneath flexible flashing at exterior face of wall. Stop flexible flashing 1/2 inch (13 mm) back from outside face of wall, and adhere flexible flashing to top of metal drip edge.

5. Install metal flashing termination beneath flexible flashing at exterior face of wall. Stop flexible flashing 1/2 inch (13 mm) back from outside face of wall, and adhere flexible flashing to top of metal flashing termination.

C. Install weep holes in exterior wythes and veneers in head joints of first course of masonry immediately above embedded flashing.

1. Use **specified weep/cavity vent products or open head joints** to form weep holes.
2. Space weep holes 24 inches (600 mm) o.c. unless otherwise indicated.
3. Cover cavity side of weep holes with plastic insect screening at cavities insulated with loose-fill insulation.

D. Place cavity drainage material in **cavities** to comply with configuration requirements for cavity drainage material in "Miscellaneous Masonry Accessories" Article.

E. Install cavity vents in head joints in exterior wythes at spacing indicated. Use **specified weep/cavity vent products or open head joints** to form cavity vents.

1. Close cavities off vertically and horizontally with blocking in manner indicated. Install through-wall flashing and weep holes above horizontal blocking.

3.11 REINFORCED UNIT MASONRY INSTALLATION

A. Temporary Formwork and Shores: Construct formwork and shores as needed to support reinforced masonry elements during construction.

1. Construct formwork to provide shape, line, and dimensions of completed masonry as indicated. Make forms sufficiently tight to prevent leakage of mortar and grout. Brace, tie, and support forms to maintain position and shape during construction and curing of reinforced masonry.
2. Do not remove forms and shores until reinforced masonry members have hardened sufficiently to carry their own weight and that of other loads that may be placed on them during construction.

B. Placing Reinforcement: Comply with requirements in TMS 602/ACI 530.1/ASCE 6.

C. Grouting: Do not place grout until entire height of masonry to be grouted has attained enough strength to resist grout pressure.

1. Comply with requirements in TMS 602/ACI 530.1/ASCE 6 for cleanouts and for grout placement, including minimum grout space and maximum pour height.
2. Limit height of vertical grout pours to not more than **60 inches (1520 mm)**.

3.12 FIELD QUALITY CONTROL

A. Testing and Inspecting: Owner will engage special inspectors to perform tests and inspections and prepare reports. Allow inspectors access to work areas as needed to perform tests and inspections. Retesting of materials that fail to comply with specified requirements shall be done at Contractor's expense.

B. Inspections: Special inspections according to Level **B** OR **C** in TMS 402/ACI 530/ASCE 5.

1. Begin masonry construction only after inspectors have verified proportions of site-prepared mortar.
2. Place grout only after inspectors have verified compliance of grout spaces and of grades, sizes, and locations of reinforcement.
3. Place grout only after inspectors have verified proportions of site-prepared grout.

C. Testing Prior to Construction: One set of tests.

D. Testing Frequency: One set of tests for each 5000 sq. ft. (464 sq. m) of wall area or portion thereof.

E. Clay Masonry Unit Test: For each type of unit provided, according to ASTM C 67 for compressive strength.

F. Concrete Masonry Unit Test: For each type of unit provided, according to ASTM C 140 for compressive strength.

G. Mortar Aggregate Ratio Test (Proportion Specification): For each mix provided, according to ASTM C 780.

H. Mortar Test (Property Specification): For each mix provided, according to ASTM C 780. Test mortar for **mortar air content and compressive strength**.

I. Grout Test (Compressive Strength): For each mix provided, according to ASTM C 1019.

3.13 PARGING

A. Parge exterior faces of below-grade masonry walls, where indicated, in two uniform coats to a total thickness of 3/4 inch (19 mm). Dampen wall before applying first coat, and scarify first coat to ensure full bond to subsequent coat.

B. Use a steel-trowel finish to produce a smooth, flat, dense surface with a maximum surface variation of 1/8 inch per foot (3 mm per 300 mm). Form a wash at top of parging and a cove at bottom.

C. Damp-cure parging for at least 24 hours and protect parging until cured.

3.14 REPAIRING, POINTING, AND CLEANING

A. In-Progress Cleaning: Clean unit masonry as work progresses by dry brushing to remove mortar fins and smears before tooling joints.

B. Final Cleaning: After mortar is thoroughly set and cured, clean exposed masonry as follows:

1. Remove large mortar particles by hand with wooden paddles and nonmetallic scrape hoes or chisels.
2. Test cleaning methods on sample wall panel; leave one-half of panel uncleaned for comparison purposes.
3. Protect adjacent surfaces from contact with cleaner.
4. Wet wall surfaces with water before applying cleaners; remove cleaners promptly by rinsing surfaces thoroughly with clear water.
5. Clean brick by bucket-and-brush hand-cleaning method described in BIA Technical Notes 20.
6. Clean masonry with a proprietary acidic cleaner applied according to manufacturer's written instructions.

3.15 MASONRY WASTE DISPOSAL

A. Waste Disposal as Fill Material: Dispose of clean masonry waste, including excess or soil-contaminated sand, waste mortar, and broken masonry units, by crushing and mixing with fill material as fill is placed.

1. Do not dispose of masonry waste as fill within 18 inches (450 mm) of finished grade.

B. Masonry Waste Recycling: Return broken CMUs not used as fill to manufacturer for recycling.

C. Excess Masonry Waste: Remove excess clean masonry waste that cannot be used as fill, as described above or recycled, and other masonry waste, and legally dispose of off Owner's property.

END OF SECTION 042000

SECTION 131000 – LAKE SPECIFICATION

PART 1 - GENERAL

1.1 SUMMARY

A. WORK INCLUDED: Contractor shall provide all labor, materials, appurtenances, tools, equipment, facilities, transportation, and services necessary for and incidental to performing all construction activities and operations for the work described in this section, complete, as shown on the drawings or specified herein. The work includes but is not necessarily limited to the following:

1. Construction survey and layout verification of subgrades, lake outline, pipelines and all associated facilities.
2. Subgrade and grade modifications required for lake work, except work covered by mass grading (by others). Finish grades to be as indicated on the plans.
3. Lake liner - Clay Liner
4. Construction of wetland planters including installation of required soils.
5. Reinforced concrete veneer where indicated on plans and wetlands.
6. Decorative colored and sculptured shoreline treatment.
7. All piping systems including equalizer, recirculation, perforated drain and under drain pipe.
8. Pump station, wet well and intake structures, mechanical and hydraulic systems installation, electrical pump control panel and appurtenances, fabrication, and installation.
9. Aeration: reinstall existing aeration system.
10. Electrical conduits, wiring and hook-up of the control panel, pumps and control systems.
11. Miscellaneous construction as shown on the drawings or required by these specifications.
12. Start-up, testing, training, and operation and maintenance (O&M) manuals as required.
13. Project team definitions:

    a. Client/Owner (“Owner”)
    b. Lake Contractor (“Contractor”)
    c. Construction Manager (“Construction Manager”)
    d. Lake Engineer (“Engineer”)
    e. Landscape Architect (“Landscape Architect”)
    f. Civil Engineer (“Civil Engineer”)

14. Waterstops Work Summary: Furnish and install expanding bentonite-based waterstop as specified herein, illustrated on project drawings, or as required to complete the work to comply with waterproofing warranty requirements in Section 071000.

B. Related work to be provided by others:

1. Water for filling and testing the completed facility.
2. Mass grading of the lake bottoms to the tolerances indicated on the plans.
3. Planting of the wetland filters and wetland planters.
4. Power for operating the pumping and recirculating equipment during testing procedures.

1.2 REQUIREMENTS OF REGULATORY AGENCIES TO BE FOLLOWED

A. The uniform building code, latest edition, where applicable.

B. Construction safety orders of the federal, state, or local government.

C. The ACI standard specifications for structural concrete, (ACI 30172, revised 1981) where applicable.

D. The national electrical code, latest edition, where applicable.

1.3 GENERAL REQUIREMENTS AND SITE CONDITIONS

A. VERIFICATIONS. Before accepting a contract or proceeding with any work, the Contractor shall verify quantities and dimensions and immediately inform the Engineer of any discrepancies between the drawings and actual conditions. No work shall be done in any area where there is a discrepancy until approval has been given by the Engineer.

B. EXISTING UTILITY LOCATIONS. The Contractor shall follow the local "blue stake" requirements and other state regulations as applicable regarding the field locating of existing underground utilities. In the event of a conflict, the Contractor shall take the necessary precautions, promptly notify the Contractor who will investigate the situation, take the necessary action and direct or inform the Contractor of the appropriate action to be taken. Failure of the Contractor to follow these procedures, places upon the Contractor the responsibility for making any and all repairs for damage of any kind at the Contractor's own expense.

C. EXISTING IMPROVEMENTS. The Contractor shall provide necessary safeguards and exercise caution against injury or defacement of any site

improvements and shall be responsible for any damage resulting from his operations and shall repair or replace such damage at his own expense. No trucks or vehicles of any kind shall be allowed to pass over sidewalks, curbs, etc. unless adequate protection is provided.

D. RESPONSIBILITIES. The Contractor shall furnish and install a complete and functional piping/pump system as described in the contract documents. All work shall be in strict accordance with the plan drawings, specifications, and existing codes and regulations as applicable.

E. DISCREPANCIES. It is the intent of these drawings and specifications that the lake system be complete and functional. It is the Contractor's responsibility to make sure that the equipment furnished is compatible and adheres to all regulations. Any discrepancies shall be noted promptly and shall be reported immediately to the Engineer and/or General Contractor for clarifications prior to installation.

F. SYSTEM CLEAN-UP. Water for filling the lake and power for operation of the system shall be furnished by the Owner and shall be available concurrently with the completion of the lake system. Debris and foreign materials shall be removed from the construction area by the Contractor, until substantial completion and final acceptance of the entire project by the Owner has taken place.

G. LINER ALTERNATIVES. Contractor shall, at his expense, hire soils engineer to perform soils testing onsite. Soils engineer shall provide geotechnical test report to the Engineer giving the thickness, porosity, hydraulic conductivity, and soil classification of the sediments under each of the proposed ponds.

1.4 SUBMITTALS

A. REQUIREMENTS. Contractor shall submit complete technical and product data on all construction materials and equipment. All submittals must be approved by the Engineer before any construction or installations will be allowed. The Contractor will submit a list of all construction materials and equipment to the Engineer required for submittal.

B. AVAILABILITY. All materials and equipment that are submitted and/or used for this project must be locally available for total replacement or for parts and certified as such with the submittal documents.

C. RECORD DRAWINGS (AS-BUILTS). Contractor must provide Engineer with a red line set of as built plans at completion of project.

D. OPERATION AND MAINTENANCE MANUALS.

1. Contractor shall provide to the Owner two (2) complete sets of operation and maintenance (O&M procedure manuals for all materials and equipment used on the project as listed and approved by the Contractor).
2. All items shall have been submitted and approved through the submittal process as mentioned above.
3. Manuals shall be provided in heavy duty 3-ring binders with a table of contents, labeled dividers and indexes.

E. CONTRACTOR QUALIFICATIONS.

1. The Lake Contractor and his supervisor to be assigned to the job shall have the following qualifications:

   a. Have successfully completed not less than five (5) lake projects, each of a scope equal to or greater than this project, within the last two (2) years.
   b. Submit to the Owner, with his formal bid, a list of at least five (5) projects complete with names, addresses and telephone numbers, of the Landscape Architect/Engineer and the Owner's representative. Include a brief description of the lake facilities including size and scope of the mechanical system, list of subcontractors (if any), and the date of completion.
   c. Be capable of furnishing as a separate bid, labor, material, and performance bonds.
   d. The Owner will determine if the Lake Contractor is qualified to propose to work on this project and may refuse any bid.

2. The Contractor, by submitting a bid, acknowledges that he understands the nature of this specialized artistic work. Also, that he understands basic hydraulic and flow requirements pertaining to streams and waterfalls and is ultimately responsible for the artistic result of his work.

1.5 STARTING OF SYSTEMS

A. Once the lake system has been completed and filled to the designated water level, all piping and mechanical/hydraulic systems have been installed and tested, all flow control structures and appurtenances have been constructed, all equipment has been properly installed and all electrical connections have been completed, the Contractor shall actuate the entire project system and be responsible for the proper operation of pumps, controls, and all other mechanical and electrical equipment included in the contract documents. Start-

up commencement, timing, duration, and phasing shall be monitored and directed by the Owner and/or Engineer.

B. The Contractor shall place the newly installed equipment and facilities into operation, and test, observe and adjust all items for a minimum period of one (1) week or until such time as all the units are properly adjusted and approved by the Owner and/or Engineer. The work performed by the Contractor shall include, but not limited to, the following items:

1. Labeling equipment and controls as directed herein or by the Owner and/or Engineer.
2. Checking all electrical and electronic equipment for proper operation.
3. Making all equipment adjustments as required.

C. OPERATOR TRAINING. The Contractor shall provide a factory employed manufacturer's representative to train Owner's staff in operation and maintenance procedures for all equipment items as specified by the Engineer during the start-up period, at no additional cost to the Owner. The representatives shall present training programs and on-site demonstrations designed to fully acquaint Owner's staff with all equipment features, routine scheduled maintenance procedures, alternative operational modes, spare parts inventories, and all other pertinent information.

1. The manufacturer's representative shall remain on-site to observe operation of the equipment and further advise Owner's staff for a minimum of one day.
2. A complete schedule of equipment, representatives, and dates for operator training shall be submitted to the Engineer for approval prior to commencement of the start-up period.
3. The Contractor shall record all equipment training sessions on high quality VHS. color format video tapes with subjects indexed and logged.
4. The Contractor shall provide two (2) duplicate sets of all tapes to the Owner.

1.7 GUARANTEES

A. MATERIAL. All construction materials and equipment shall have a minimum of one (1) year guarantee by the Contractor for defects in material and workmanship from the date of certified final completion and Owner acceptance of the entire project system. The membrane liner shall have a separate guarantee by the lining manufacturer as specified elsewhere in this specification.

C. DAMAGE. This warranty shall guarantee the complete 100% replacement cost of the defective materials deteriorating as a result of physical or chemical changes which render the lining ineffective as a waterproof membrane. Should defects or premature loss of use occur, the Contractor shall supply, repair, or replace the material on a complete basis, including all related costs of replacing or repairing the damage, refilling the lake system water to the designated water surface elevations, any required retesting of the facilities, and complete site restoration as needed. The Contractor shall also be responsible to provide whatever is necessary to maintain the ongoing operation of the lake systems, including the set-up of any temporary pumping facilities as needed. A certified guarantee document including the above mentioned requirements, in writing, shall be submitted to the Owner with copies provided in the O&M manuals.

D. WORKMANSHIP. The Contractor shall guarantee his workmanship for a period of one (1) year. The entire lake system project including but not limited to pumps, pipes, equipment, lining, concrete shoreline, aeration units, flow control structures, etc. shall exhibit no measurable water loss from leakage. Should measurable losses, in excess of the Greenbook allowable water leakage for piping systems (Greenbook 306-1.4) and the calculated evaporation losses in the lake occur, after filling of the lake system and/or during the one (1) year guarantee period, the Contractor shall be responsible for locating and eliminating the leakage, at no additional cost to the Owner. If, due to the fault of the Contractor’s workmanship, the lake and/or piping system must be drained to effect repairs, the Contractor shall be responsible for all associated costs of replacing or repairing the damage, refilling the lake water to designated water surface elevations, any required retesting of the facilities, and complete site restoration as needed. The Contractor shall also be responsible to provide whatever is necessary to maintain the ongoing operation of the lake systems, including the construction of temporary dams and the set-up of any temporary pumping facilities as needed. A certified guarantee document including the above mentioned requirements, in writing, shall be submitted to the Owner with copies provided in the O&M manuals.

1.8 SPARE AND WEAR PARTS

All typically required spare and wear parts for all pumps and equipment shall be provided by the Contractor to the Owner in kit form and shall be field obtainable from pump nameplate data. The cost for these parts shall be included in the Contractor's unit bid prices. A list of required parts will be provided from the Contractor. The spare/wear parts lists shall be included in the O&M manuals in the appropriate sections. All spare and wear parts shall be locally available.

PART 2 - PRODUCTS

2.7 ESS-13 LINER (SOIL LINER)

A. Scope. These specifications cover the work and equipment necessary for the installation of a treated and compacted soil lining. When accomplished, the work will result in a treated soil membrane lining with a smooth finished grade.

B. Materials:

1. Manufacturing: Manufacturer shall have been in business for at least 1 year and must produce evidence of having manufactured the Seepage Inhibitor ESS-13, as well as the Soil Stabilizer for this period of time.
2. Soil Stabilizer: Soil stabilizer shall be an enzyme wetting agent and compaction aid, trade name Enzyme-13 as manufactured and distributed by Seepage Control, Inc., P.O. Box 10566, Scottsdale, Arizona 85271 (602) 254-4501.
3. Seepage Inhibitor: Seepage inhibitor shall be a surfactant known by trade name ESS-13 as manufactured and distributed by Seepage Control, Inc., P.O. Box 10566, Scottsdale, Arizona 85271 (602) 254-4501.
4. Low Permeability Membrane: The low permeability membrane shall be constructed with select soil from the site, mixed, treated with soil stabilizer to form a low permeability membrane after compaction. Total thickness shall be 12 inches or as recommended by seepage inhibitor manufacturer.
5. Soil or base material: The liner will consist of a treated and compacted soil. The soil to be treated will be from an onsite source as recommended by the Soils Engineer and approved by the seepage inhibitor manufacturer.

C. Quantities of Sealant Materials:

Quantities of sealant materials shall be specified by the seepage inhibitor manufacturer.

D. Control of Membrane Construction:

1. The construction of the seepage control membrane shall be under the supervision and control of the seepage inhibitor manufacturer.
2. The seepage inhibitor manufacturer shall have the right to stop all work pertaining to the membrane liner if their specifications are not being met.

2.8 PVC PIPING:

A. MATERIALS. Pipe shall be polyvinyl chloride (PVC) and plastic irrigation pipe (pip) to size and pressure class indicated on the plans. Pressure class for pip shall be 80 psi, SDR 51 unless otherwise noted. Irrigation pipe shall be in accordance with Soil Conservation Service standard SCS 430-dd for sizes 6” through 15”, and ASTM D2241 Annex A1 for sizes 15” through 27”. The PVC cell classification is 12454B as defined under ASTM D1748.”

B. The pipe shall be homogenous throughout, and free from visible cracks, holes, foreign inclusions or other defects.

C. Joints shall be integral bell, and spigot type with rubber gaskets, conforming to ASTM D3139. The elastomeric ring shall be in accordance with ASTM F477.

D. PVC pipe shall not be stored in the sun for any length of time and shall not be dropped or abused in a manner that can cause cracking. Discolored PVC material shall not be accepted or used.

2.9 PRECAST WET WELL AND VAULT STRUCTURES:

A. GENERAL. The precast wet well (and all precast vaults) shall be per Utility Vault Company, approved equal and to size shown on the plans. All precast manhole sections shall be manufactured in a plant specifically designed for this purpose. Weir wall partitions shall conform to the design shown on the drawings.

B. DESIGN LOADS. Design loads shall consist of dead load, live load, impact, and in addition, loads due to water table, hydraulic operations, equipment operations, and any other loads which maybe imposed upon the structure. Live loads when applicable shall be for H20 and/or H20 S 16 per A.A.S.H.T.O. standard specifications for highway bridges with revisions. Design wheel load shall be 16 kips. The live load shall be that loading which produces the maximum stresses and bending moments in the structure.

C. JOINT SEALANT. The joint sealant shall be as provided by the vault manufacturer, and shall be installed in quantities recommended by the vault manufacturer.

D. PIPE PENETRATIONS. Pipe penetrations shall be located and sized as shown on the plans, and shall be a minimum of 6" larger than the pipe diameter. All penetrations shall be sealed with non-shrink grout, and shall be watertight.

E. FORMS. All forms used in placing concrete shall be of metal sufficiently designed and braced to maintain their alignment under pressure of the concrete during placing.

F. CONCRETE:

1. Aggregates. All aggregates fine and coarse other than lightweight shall conform to specifications outlined by ASTM C33 64. Lightweight aggregates shall be free of deleterious substances causing reactivity with oxidized hydrogen sulfide. Both types of aggregate shall be graded in a manner as to produce a homogenous concrete mix. All materials are to be accurately weighed at a central batching facility for mixing.
2. Cement. All cement shall be Portland Cement conforming to ASTM C150, Type II. Cement shall be sufficient to produce minimum compressive strength of 3,000 PSI.
3. Placing. All concrete shall be handled from the mixer or transport vehicle to the place of final deposit in a continuous manner as rapidly as practicable, and without segregation or loss of ingredients. Until the approved unit operation is completed, concrete shall be placed by mechanical internal or external vibrating equipment. Duration of the vibration cycle shall be limited to the time necessary to produce satisfactory consolation.
4. Curing. For purposes of early re-use of forms, the concrete may be steam cured after an initial set has taken place. The steam temperature shall not exceed 160 degrees and the temperature shall be raised from normal ambient temperatures at a rate not to exceed 50 degrees per hour. The steam cured unit shall not be removed from the forms until sufficient strength is obtained for the unit to withstand any structural strain that may be subjected during the pouring operation. After the stripping of forms, further curing by means of water spraying or a membrane curing compound may be used and shall be of a clear or white type, conforming to ASTM C309 58.

G. Reinforcing steel. All reinforcing steel, including welded wire mesh, shall be of the size and in the locations as shown on the manufacturer's shop drawings. All reinforcing shall be sufficiently tied to withstand any displacement during the pouring operation. All bars shall be intermediate or hard grade billet steel conforming to ASTM A615. Bars other than 1/4" round shall be deformed in accordance with ASTM A 306.

2.10 CAST-IN-PLACE CONCRETE:

A. Concrete structures shall be specified as in Section 303 of the Standard Specifications for Public Works Construction, except as herein modified. Provide concrete work, complete as indicated, specified, and required.

B. CONCRETE MATERIALS:

1. Conform to the applicable portions of Section 201 of the Standard Specifications for Public Works construction except as modified herein.
2. Concrete mixes used for the various structures shall be designed to obtain the following minimum 28 day compressive strength:

   · Pump stations/catch basins 3,000 PSI

1. PORTLAND CEMENT. Use Type II modified cement.
2. AGGREGATE. Use ¾-inch maximum aggregate.
3. ADMIXTURES. Use air entraining agent conforming to ASTM C260. Use water reducing admixture conforming to ASTM C494 Type A. No other admixture shall be used.
4. CEMENT GROUT. Make cement grout from one part cement to two parts silica sand filler. Add only enough water to moisten materials so that they can be squeezed into a ball by hand. Use cement grout as noted on the drawings.

C. REINFORCEMENT:

1. Conform to the applicable portions of section 201 of the standard specifications for public works construction except as modified herein.
2. REINFORCING BARS. Use ASTM A615 grade 60 bars.
3. WELDED WIRE FABRIC. Use ASTM A185 Mesh.
4. Store all reinforcing at the site so as to prevent contact with the earth.

D. FORMWORK:

1. Construct forms to be mortar tight.
2. Adequacy of the form, bracing, and shoring shall be the sole responsibility of the Contractor. The design shall meet the requirements of ACI 347.
3. Comply with tolerances for formed surfaces required by ACI 301.

E. CONCRETE FINISHING:

1. Provide concrete finishes for all concrete surfaces. All work shall be performed by skilled cement finishers.

2. All exposed surfaces, except the top surface of horizontal slabs, shall be provided with a Class 1 surface finish in accordance with Section 303-1.9.3 of the Standard Specifications for Public Works Construction.
3. EXTERIOR HORIZONTAL SLABS. The top surface of exterior horizontal slabs shall be finished in conformance with Section 302-6.4 of the Standard Specifications for Public Works, except that the final finish shall be accomplished with a drag broom in lieu of burlap bags.

    a. All exterior slab surfaces shall slope a minimum of 1% to drain surface water away to a proper location. Review elevations shown on drawings for adequate slopes before setting grades. Report any conditions that will not provide adequate slopes before processing.
    b. Edging Slabs. Tool a 3/8-inch radius on all exposed edges of slabs, machine bases, curbs, top of walls and other exposed horizontal edges. Repeat tooling with each floating or troweling operation.
    c. Provide weakened-plane joints at least 1-1/2 inch deep in all paving slabs where indicated but not more than 8 feet apart in each direction. Repeat tooling with each floating or troweling operation.
    d. Run decorative feature grooves with a 1/4-inch deep rounded tool before the final troweling in paving where shown.

2.11 MECHANICAL SYSTEM:

A. PUMP SPECIFICATIONS:

1. Contractor shall provide, deliver, and install all items of work as indicated on the plans and/or described herein suitable for a complete and operational pump station. Contractor shall submit shop drawings and material specifications for all piping, valves, appurtenances, and other equipment to Engineer for review and approval. Shop drawings shall include all electrical information.
2. The recirculation pump system shall be per “Weinman” product 310 Series Pump Model # 4GL, or approved equal. Pump shall be connected with “NEMATO” strainer basket part# NSS-06-030-0605. The pump shall be rated for a minimum system capacity of 300 GPM, 4.5 in. impeller, at 10 ft. (TDH). The pump shall be supplied with a 1 HP, 1750 RPM motor drive and wired for operation at 240 VACS, 1 phase, 60 Hz service.
3. The float fountain per “AquaMaster” product Model # M5412-sc, 1hp Master Series Fountain Aerator 208-240V, 1 Phase.
4. Owner/Contractor to supply plan for electrical connection from power source. General Contractor to provide construction and installation of power source.

5. The system manufacturer shall submit individual pump curves for approval.
6. Pumps shall be inter-connected to level controls in the wet well for high level "on" and low level shut-off.
7. Piping and fittings in pump station shall be PVC schedule 40 piping and schedule 80 fittings unless otherwise noted or Engineer approved equal.

B. MECHANICAL APPURTENANCES:

1. AIR RELIEF VALVE. The air relief valve shall be of PVC construction and shall be per waterman AVP series or approved equal to size shown on plans.
2. REPAIR COUPLINGS. All repair couplings shall be per Smith-Blair or approved equal, unless otherwise noted on the plans and fitted for pipes as shown on the plans.
3. BUTTERFLY VALVE(S). The butterfly valve(s) shall be for hand operation per keystone Fig, unless otherwise noted, or approved equal. They shall be wafer type for flange mounting; the pressure rating shall be 125 lb. Valve bodies shall be high strength cast iron with carbon steel shafts.
4. CHECK VALVE(S). The check valve(s) shall be wafer type, spring loaded, butterfly type with dual springs and shall consist of a rubber lined insert in a cast iron body per Keystone or approved equal. When chlorine is applied, the check valve is to be epoxy coated.

C. CONTROL AND PUMP PANELS:

1. The system shall include a U.L. labeled control panel in a single Nema 1 enclosure. The interior of the panel shall contain a permanent label containing complete system, pump, and motor data, including flow, pump impeller trims, fuse sizing, etc.
2. CONTROL PANEL. Control panel shall be furnished by the Contractor and shall be compatible with the pumps furnished. The panel shall contain magnetic starters, disconnects, overload relays, quick trip ambient compensated heater elements, transformer, 7 day, skip-a-day time clock(s), a 100 volt duplex receptacle, and breakers as needed. The box shall be NEMA 12 suitable for wall mounting and shall have the H-O-A switch and reset in the door. The box shall be lockable and designed specifically for wall mounting.
3. CONDUITS. All conduits installed shall be galvanized and rigid, or flexible, meeting the following requirements:

   Conduits shall be sized and materials selected to accommodate the numbers of conductors in accordance with the tables and specifications given in the current edition of the National Electrical Code. The minimum

size of any conduit shall be ½ inch. Joints shall be cut square, reamed smooth and drawn up tight. The galvanized conduit shall conform to the Federal Specification W C581 CJ American rigid steel conduit specification C80.1 1953 and Underwriter's Laboratories Specification.

The inside diameter of the sleeve shall be the same as the outside diameter of the I.P.S. pipe used with it. The wall thickness of the sleeve shall be the same as the jacket of the pipe.

All conduits to be run underground shall be an approved PVC type.

Couplings and conduit unions shall be galvanized steel. They shall have the conventional dimensions of the trade and shall be internally threaded with a tapered thread at each end to fit the tapered thread specified for the corresponding size conduit.

4. The pump panels shall include externally operable disconnect switches, circuit breakers, and magnetic across-the-line starters with externally resettable overload relays.
5. Each pump will have an industrial type H-O-A selector switch and a green lensed motor run light, mounted on panel door. Indicating lights for motor overload and low voltage/phase fail shall also be provided. Indicating lights shall be of the 6 volt transformer type. Full voltage lights are not permitted.
6. Panel shall be protected from phase loss-reversal and failure, under-voltage, and shall have a lightning arrestor. The entire unit shall be factory assembled, wired, and tested with a complete electrical, hydrostatic, and performance test. It shall be cleaned and painted with high grade machinery enamel prior to shipment.

2.12 AERATION:

A. USE EXISTING AERATION SYSTEM. CONTRACTOR TO PROTECT AND REINSTALL

2.13 WATERSTOPS:

A. Provide Waterstop-RX bentonite waterstop and water-based adhesive as manufactured by Colloid Environmental Technologies Company (CETCO), 1500 West Shure Drive, Arlington Heights, Illinois 60004-1440, USA. Phone: (847)392-5800; Fax: (847)506-6195; Web-site: http://www.cetco.com.
B. Waterstop shall consist of 75% sodium bentonite and 25% butyl rubber compound formed into uniform coils.

C. NSF Certified: Bentonite waterstop shall be certified by NSF International to conform to the requirements of NSF Standard 61 – Drinking Water System Components – Health Effects.

D. BENTONITE WATERSTOPS:

1. WATERSTOP-RX 101: 1" x 3/4" x 16' 8"' rolls of a flexible strip of bentonite and butyl rubber compound for use in concrete construction joints - not designed for expansion joints.
2. WATESTOP-RX 101T: 1-1/4" x 1/2" x 16' 8" trapezoidal rolls of flexible strip of bentonite and butyl rubber compound with a reinforcing poly scrim for use in concrete construction joints - not designed for expansion joints.
3. WATERSTOP-RX 102: 3/4" x 3/8" x 25' rolls of flexible strip of bentonite and butyl rubber compound for use in concrete construction joints - not designed for expansion joints.

E. WATERSTOP ADHESIVE

1. Volclay WB - ADHESIVE: Gray, non-flammable, latex and water based adhesive used to secure all Volclay Waterstop-RX products to concrete, metal and PVC horizontal and vertical surfaces. Keep from freezing. Application rate: 400-600 linear feet per gallon.

F. WATERSTOP PRODUCT DELIVERY, STORAGE & HANDLING

Deliver materials in factory sealed and labeled packaging. Sequence deliveries to avoid delays, while minimizing on-site storage. Handle and store following manufacturer's instructions, recommendations and material safety data sheets. Protect from construction operation related damage, as well as, damage from weather, excessive temperatures and prolonged sunlight. Remove damaged material from site and dispose of in accordance with applicable regulations.

G. ALUM FEED PUMP

Lake feed pump shall be 'Stenner' Model: 85M2, fed from owner supplied 50 gallon dual contained carboys seismically anchored to wall. Provide factory mounting bracket and 'Vapor-Lok' fittings typical. Hard pipe to point of injection. Quantity per plans.

H. ALUM STORAGE TANK

Provide Chemical Storage Tank with Vertical Bulk Storage 50 Gallon, “KnorrSystem” Model# N-41865. Quantity per plans.

PART 3 - EXECUTION:

3.1 FINISH LAKE GRADING:

A. PRIOR TO START OF WORK. Contractor and Owner's representative shall examine excavation by others for compliance with contract documents. Commencement of work by Contractor means acceptance of site conditions. All costs for finish grading work shall be included in the PVC liner unit price bid item provided in the bid schedule.

B. SUBGRADE PREPARATION. The subgrade upon which the membrane lining is to be placed shall be prepared immediately prior to placing the liner. The Contractor shall prepare the subgrade such that it shall be free from earthen clods, rocks and cobbles larger than ½ inch in diameter and rubbish or other foreign materials. The surface of the completed subgrade shall be smooth, uniform, and free from sudden changes in grade other than at designated slope areas and boulder nests. Should subgrade be found to be unsuitable, a minimum 2 inch plating depth with suitable material shall be provided. Or the subgrade shall be prepared (free of ½ inch foreign material) for a minimum depth of 2 inches, or a suitable geotextile placed on the subgrade under the liner.

1. The maximum slope for PVC geomembrane with earth cover or in exposed condition shall not exceed 3 horizontal to 1 vertical unless approved by the manufacturer. Contractor to provide documentation of the manufacturer’s approval.
2. The geomembrane installer and the Owner’s representative shall inspect the surface to be covered with geomembrane on each day’s operation, prior to placing the geomembrane to verify suitability.
3. The geomembrane installer and Owner’s representative shall provide daily written acceptance for the surface to be covered in that day’s operation. The surface shall be maintained in a manner to insure subgrade suitability.
4. All subgrade damaged by construction equipment and deemed unsuitable for geomembrane deployment shall be repaired prior to placement of the geomembrane. All repairs shall be approved by the Owner’s representative. The responsibility for repairs and maintenance of the subgrade shall be defined in the preconstruction meeting.

C. GRADING OUTSIDE THE LAKE EDGE. It is the intent of these plans and specifications to provide adequate landscape areas outside the lake perimeter. The Contractor shall insure that rock placement outside the lake system does not hinder drainage. The Contractor shall coordinate his work with the grading Contractor and shall bring any discrepancies or problem areas to the attention of the Owner’s representative, prior to the completion of the work.

3.2 PIPING INSTALLATION:

A. TRENCHING. Trenches shall be excavated to the width necessary to permit the pipe to be laid and jointed properly and the backfill to be placed as specified. In no case shall the trench width at and below the top of the pipe be such that the clean space between the pipe barrel and the trench wall exceed 12" on each side of the pipe. The trench shall be excavated to the proper depth, and the trench bottom shall be graded to provide uniform bearing and support for pipe for its entire length. A continuous trough shall be excavated to receive the bottom quadrant of the pipe, and bell holes shall be provided at each joint to permit the jointing to be performed properly, so that the pipe will be uniformly supported. Whenever soil is encountered in the bottom of the trench that is incapable of supporting the pipe, as determined by the Owner's representative, such soils shall be removed to the depth direction and the trench backfilled and compacted to the proper grade with approved material

B. INSTALLATION. The pipe shall be placed to lines and grades as shown on the plans. All lines shall have 3' of cover (minimum) outside the lake perimeter and 1' minimum cover within the lake perimeter except as they emerge from the ground or as otherwise indicated on the plans. Pipes shall vary below minimum grade where existing pipes are encountered. All pipes shall be inspected for cracks or defects just prior to installation. No faulty pipe shall be incorporated into the job. A joint lubricant as recommended by supplier may be used but must be free from harmful effects. Contractor shall comply with the Los Angeles County Public Works Engineering Design Guidelines in conjunction with above requirements as applicable.

C. BEDDING AND BACKFILL. Backfill materials shall consist of the excavated material free of large stones (greater than 3 inch diameter) or foreign material. When the excavated material is unsuitable in the opinion of the Owner's representative, other approved material such as sand shall be provided by the Contractor to insure proper backfill and compaction. Any bracing installed to prevent cave-ins shall be withdrawn in a manner that will maintain the desired support during the backfilling operations. Contractor shall comply with the Los Angeles County Public Works Engineering Design Guidelines in conjunction with the above requirements as applicable.

D. Backfill material in trenches shall be compacted to 90 percent of maximum density, except under roads and structures, which shall be compacted to 95 percent of maximum density. Maximum density shall be defined by the ASTM Specification D698, otherwise known as standard proctor, and ASTM 1557 respectively. The moisture content of the backfill material shall be such that the Contractor is able to meet the specification. Trench backfill from the bottom of the trench to a point halfway up the side of the pipe shall consist of the excavated or approved material tamped to the required density in layers not

exceeding 6 inches loose thickness. In lieu of the tamped material, the Contractor may use sand to the same depth. The sand shall be placed in the trench in such a manner that the pipe will not be damaged. The backfill material and/or sand shall be thoroughly worked under the sides of the pipe. Flooding or jetting of trenches will be permitted as a means of achieving compaction, but care should be taken to prohibit any lifting of the pipe due to buoyancy. Contractor shall comply with the Los Angeles County Public Works Engineering Design Guidelines in conjunction with above requirements as applicable.

3.3 PRECAST VAULT:

A. FIELD PREPARATION. The Contractor shall prepare excavation large enough to accommodate the outside dimension of the wet well as shown on the drawings. Prior to the setting, the Contractor shall provide a minimum of three (3) to six (6) inches of fine grained material as specified by the wet well manufacturer to be suitable as a base to receive the wet well. The base material shall be compacted and graded level at proper elevation to receive the wet well.

B. JOINT SEALANT. The joint sealant shall be as provided by the wet well manufacturer and shall be installed in quantities recommended by the manufacturer.

C. PIPE PENETRATIONS. Pipe penetrations shall be located and sized as shown on the plans, and shall be a minimum of 6" larger than the pipe diameter. All penetrations shall be sealed with non-shrink grout, and shall be watertight.

D. STRUCTURE BACKFILL. The Contractor shall backfill around wet well where or vault structure where shown on the plans. The fill material shall be free of foreign matter, debris and large rocks or clods, and placed around the vault in 6 inch lifts and compacted to 90% relative density. The Piping Contractor shall take special precautions to insure uniform compaction around pipes where they enter and exit the structure and to insure that the pipes are not damaged during the backfill operation. Contractor shall comply with the Los Angeles County Public Works Engineering Design Guidelines in conjunction with the above requirements as applicable.

E. DELIVERY. Delivery of the product will be made by common carrier on manufacturer’s boom equipped truck. The lake Contractor shall be responsible for providing sufficient labor and equipment to place the units.

3.4 3.9 Testing of Field Seams

A. Destructive test seams are to be made by each seaming crew, at the beginning of the seaming process, and every four (4) hours thereafter, or every time equipment is changed. These seams are to be made of like materials provided for the purpose of testing and not cut from the seamed panels. Each seaming crew and the materials they are using must be traceable and identifiable to their test seams. The samples shall be numbered, dated, and initialed by the technician making the seam. The location made by appropriate notes on a printed panel layout for the project. The completed field seam sample shall measure no less than 14 inches in width and 36 inches in length.

B. The field test seams are to be tested for seam strength and peel adhesion. Seam shear and peel adhesion strength shall be tested in accordance with ASTM D751 modified method (Shear) and ASTM D413, Machine Method, Type A (Peel).

C. If a test seam fails to meet the field seam design specification, then additional test seam samples will have to be made by the same seaming crew, using the same tools, equipment, and seaming materials and retested.

3.10 CONCRETE VENEER INSTALLATION:

A. GENERAL. A wire reinforced concrete veneer cover shall be installed over the membrane liner by the Contractor where shown on the plans.

B. WIRE MESH. 1.2 inch by 1.2 inch by 20 gauge octagonal wire mesh shall be placed over the membrane liner in all areas to receive a concrete veneer. The wire shall be laid in a continuous layer, with adjacent edges over-lapping 8.0 inches (minimum) and secured to another by the use of hog rings or other appropriate clips which cannot puncture the liner.

C. CONCRETE. The concrete shall be placed over the wire. All wire shall be covered with concrete so that no wire is visible on the surface or edge of the concrete except where indicated on the plans. The concrete shall be rough, broom finished, and water sprayed, chemical or membrane cured to prevent excessive cracking during or after curing. All cracks 1/4” and wider shall be caulked with an approved sealant. Curing operations shall be one or both of the following methods: (1) Application of a light spray of water, three times a day for three consecutive days beginning the following a.m.; or (2) Spray application of an approved exterior curing compound. No concrete admixtures for curing will be allowed.

D. CONCRETE PLACEMENT METHODS. Placement of the concrete for the veneer shoreline may be done by conventional form work, slip form or shotcrete application methods, all in accordance witb the plans and specifications. Any method which is chosen by the Contractor shall require an "application method plan" submittal to be submitted to the Contractor for review and approval prior to construction of the shoreline. For any method chosen, the Contractor must meet the accepted industry standards for that type of concrete placement method (i.e. ASTM).

3.11 SCULPTURED SHORELINE CONSTRUCTION:

A. GENERAL. An artificial shoreline shall be constructed that has the appearance of a natural eroded soil around the lake perimeter as indicated on the plans. Prior to the scheduled construction of the shoreline, the Contractor shall construct a 10’ long test section of shoreline for approval of texture and color by the Owner and Contractor.

B. CONCRETE COLOR. All concrete shoreline shall be color-stained. Concrete color shall be desert varnish by Eonite (Tempe, AZ) or Permeon by Advanced Concrete Technologies (Santa Ana, CA 714-731-0906) or an approved equal. Varnish shall be applied to the concrete after the concrete has cured for 7 days and is completely dry. The concrete shall be stained to blend as closely as possible with the color of the native soils, or to the color selected by Owner. Submit color sample on 12 inch concrete sample to Engineer for approval. The concrete color shall be applied after any patching of concrete is finished.

3.12 LINER, PLANTER AND WATER QUALITY FILTER SOIL BACKFILL:

A. SOIL COVER. Soil cover for the liner and aquatic planters shall be selected from on-site borrow locations left by the mass grading Contractor (others) and approved by the Landscape Architect.

1. In general, the soil cover shall be coarse, sandy loam, select material approved by the Landscape Architect. Soil cover shall be free from lumps or balls of clay and shall not contain excessive amounts of calcareous or clay coatings, and shall not contain any caliches, debris, synthetic materials, deleterious or foreign substances. In addition, soil cover shall meet the following gradation criteria: no more than 50% of the material shall be fine (pass the no. 200 sieve), and the fine clay fraction shall not be more than 20%, leaving at least 30% as silt. The soil cover plasticity index (PI) shall be less than 10.
2. Soil cover shall be placed over the lining and/or concrete veneer where shown on the plans, after liner and veneer installation, inspection and

approval by the Engineer, to the grades, elevations, and depths shown on the plans. Soil containing sharp, jagged rock, clods, roots, debris or any other material which may be abrasive to, or may puncture the membrane, shall not be used as cover material. The Contractor shall satisfactorily demonstrate to the Owner and Engineer that use of the chosen material shall not have any detrimental effects on the lake.

3. Care should be taken when backfilling the trenches and covering the liner to prevent any damage to the geomembrane or other geosynthetics. At no time will construction equipment come into direct contact with the geomembrane. If damage occurs, it will be repaired at the backfilling Contractor's expense, prior to completion and backfilling.
4. Refer to plan dimensions for geomembrane soil cover requirements (if necessary).
5. Cover soil shall be placed over the geomembrane from the base of the slope up.

3.13 AQUATICS AND DECORATIVE ROCK PLACEMENT:

A. General. Aquatic and decorative rocks shall be placed in and around the waterscape as indicated on the plans. Rock shall, insofar as practical, be that which is indigenous to the area. Samples of rock and cobbles shall be presented to the Owner's representative, for his approval prior to installation.

B. Delivery. Handling of rocks with loaders and dumping is permitted, but care shall be taken that rock is not damaged or scarred excessively as it is handled on the jobsite.

C. Quantity. The Contractor shall furnish the boulders to the jobsite, including rock used for the stream drops and cascades. Most rocks that are two feet in diameter and larger, are shown on the drawings, but will be large rocks required in waterfall and stream locations that cannot be shown in a practical way on the drawings.

1. Estimated quantities for the construction of the water feature are as follows:

   Total weight: 300 tons based on a volumetric weight of 150 lbs/cf of decorative boulders graded as follows:

Size	% Composition	Quantity
1.5'-2.0'	25% by vol.	435 Boulders
2.0'-3.0'	50% by vol.	300 Boulders
3.0'-4.0'	25% by vol.	60 Boulders

2. Contractor shall provide in addition: 25 tons of Stream Cobble (4”-12” diameter).

   The above quantities are minimum quantities based on preliminary estimates only. The contractor is responsible for actual quantities for construction. The contractor can order boulders by weight but must calculate quantities by volume.

3. Size of decorative boulders is defined as follows: A 2.0’ boulder is 2.0’ at its largest diameter and greater than 60% of 2.0’ for all other diameters.

D. Placement. Aquatic and decorative rock shall be placed in and around the waterscape and sized as indicated on the drawings. No rock shall be placed in direct contact with the liner. Rock shall not be dumped or dozed into place but set by the use of a crane or cherry picker, utilizing slings or tongs. Rock with scars, chips, or other blemishes shall be placed in such a manner as to minimize the exposure of the defect after the rock is in place. Rock being set within the waterscape and sized four (4) feet nominal and larger shall rest on a three (3) inch thick concrete pad, additional concrete shall be placed around the rock to fill the voids and bring the area to adjacent finish elevation. Decorative rock shall be placed in excavated depressions, in general to give the appearance that the rock is native to the location. Most rock shall be 50% buried. Cobble rock placement may be made with front loading type of equipment and adjusted by hand. Care shall be taken that the cobble is not dropped on the concrete veneer in such a manner as may crack or split the membrane liner below. Cobble rock shall be locked in place with concrete grout to minimize loose cobble. Any splattered or spilled grout on the exposed surface of the cobble should be removed immediately.

E. Acceptance. Final artistic result of the rock placement shall be the responsibility of the Contractor to perform this work to the satisfaction of the Owner’s representative.

3.14 CONCRETE:

A. PLACING. All concrete shall be handled from the mixer or transport vehicle to the place of final deposit in a continuous manner as rapidly as practicable and without segregation or loss of ingredients, until the approved unit operation is completed. Mix concrete on-site a minimum of 1 minute per cubic yard; do not add water. Concrete shall be placed by mechanical internal or external vibrating equipment. Duration of the vibration cycle shall be limited to the time necessary to produce satisfactory consolation. Contractor shall follow Greenbook specs for the above requirements.

B. CURING. Curing shall be used by means of water spraying, membrane, and/or chemical curing and shall be of a clear or white type, conforming to ASTM C309 58.

3.15 ELECTRICAL:

A. CONDUITS:

1. Concealed conduits shall be run in a direct line and with minimal bends as possible. Exposed conduits shall be run parallel to or at right angles with the lines of the building. All bends shall be made with the standard conduit ells. Conduit shall be bent to not less than the same radius of screwed joints.
2. Conduit fittings. All bends shall be free from dents or flattening. Not more than the equivalent of four quarter bends shall be used in any runs between the terminal at cabinets, outlets, and junction or pull boxes. Boxes shall be located in accessible locations.
3. Conduits shall be continuous from outlet to outlet, from outlets to cabinets, junction or pull boxes; and shall enter and be secured to all boxes in such a manner that each system shall be electrically continuous from point of service to all outlets. Terminals of all conduits shall be furnished with locknuts and bushing. The Contractor shall plug the ends of each conduit with an approved cap or disc to prevent the entrance of foreign materials when exposed during construction.
4. Where conduit has to be cut in the field, it shall be cut square using proper saws or pipe cutter. The cut ends of the field conduit shall be reamed to remove burrs and sharp edges.
5. Conduits shall be joined by means of couplings or conduit unions. Joints shall be set up tight. Runs shall be straight and true; elbow offsets and bends shall be uniform and symmetrical.
6. Conduits shall be mounted to walls, ceilings and floors where it may run exposed. Exposed runs of conduit shall have supports spaced not more than four (4) feet apart and shall be installed with runs parallel or perpendicular to walls and structural members with right angle turns and symmetrical bends.
7. Where exposed conduit needs support or clamping to the structure, support shall be an approved type of wall bracket, ceiling trapeze hanger, or galvanized malleable iron one hole strap with clamp back, and steel bolt or screw of appropriate size to fill hole in the strap and clamp back. Supports shall be secured by means of toggle bolts in hollow masonry, expansion bolts in concrete or brick, machine screws on wood construction.

8. No deformed, split or otherwise defective conduit shall be installed. Conduit shall be installed with a minimum number of joints.

B. GROUNDING. The equipment, conduit systems, supports, and neutral conductors shall be grounded in accordance with the latest issue of the national electrical code or as shown on the drawings.

3.16 INSTALLATIONS:

A. The pump station, monitors, controls, equipment, and all other related materials shall be installed in accordance with Section 1.02 of these Technical Conditions as applicable.

3.17 PIPELINE TESTING:

A. PIPELINE PRESSURE TEST. All gravity and recirculation pipelines shall be subjected to a field hydrostatic pressure of 50 psi for a period of four hours per Greenbook 306-1.4.5. One hundred percent of the pipeline lengths shall be tested. All concrete anchor blocks shall be per Greenbook specs and shall be allowed to cure a sufficient time to develop adequate thrust resistance prior to testing and the pipeline shall not be tested until it has been filled with water for a minimum of 24 hours. Before testing, the pipe shall be backfilled with 2-½ feet of material or center loaded to hold the pipe in place while testing. The water necessary to maintain this pressure shall be measured through a meter. Any noticeable leaks shall be repaired and any defective pipe shall be replaced with new sections prior to commencing a retest. Test sections shall be physically isolated from previously tested pipelines, existing pipelines or main lines prior to connecting the new line. Tests shall be conducted with the open ends of pipe, valves and fittings suitably closed with plugs or caps as necessary per Greenbook. Valves shall not be operated during the testing procedures. All testing shall be inspected by the Owner and/or Engineer.

B. Field Testing Procedure. The test shall be conducted in the following manner. All air shall be expelled from the pipe. To accomplish this, if air valves or other outlets are not available, taps shall be made at the high points to expel the air and these taps shall be tightly plugged afterwards. The pressure in the pipeline shall then be pumped up to the specified test pressure. When the test pressure in the line has dropped to 10 PSI, at which time the pressure shall again be pumped up to the specified test pressure. This procedure shall be repeated until four (4) hours have elapsed from the time the specified test pressure was first applied. At the end of the four hour period, the pressure shall be pumped up to the test pressure for the last time.

C. Leakage Allowance. The leakage shall be considered as the total amount of water pumped into the pipeline during the four (4) hour period including the amount required to reach the test pressure for the final time. Leakage shall not exceed the rate of 24 gallons per inch of diameter, per mile, per 24 hours.

The following table indicates the leakage allowance for various size pipes and is equal to the number of gallons per the four hour test period per 1,000 feet of pipe being tested:

Leakage Allowances
Gallons Per Four Hours per 1,000 Feet of Pipe

Pipe Size (Inches)	Test Pressure (PSI)	Allowable Leakage (Gallons)
1	50	.8
1-1/2	50	1.2
2	50	1.5
2-1/2	50	1.9
3	50	2.3
4	50	3.0
6	50	4.6
8	50	6.0
10	50	7.6
12	50	9.0
15	50	11.4
18	50	13.6
21	50	16.0
24	50	18.2
27	50	20.4

Any noticeable leak shall be stopped and all defective pipes, fittings, valves, and other accessories discovered in consequence of the test shall be removed and replaced by the Contractor with sound material. The test shall then be repeated until the total leakage during a test of four hours duration does not exceed the rate specified above. All testing shall be inspected by the Owner's representative.

3.19 WATERSTOP INSTALLATION

A. WATERSTOP SUBSTRATE INSPECTION AND CONDITIONS:

1. The installer shall examine conditions of substrates and other conditions under which this section work is to be performed and notify the contractor, in writing, of circumstances detrimental to the proper completion of the work. Do not proceed with work until unsatisfactory conditions are corrected, and are acceptable for compliance with manufacturer's warranty requirements.
2. Installation shall not proceed when work areas are flooded or wet to the extent that would cause bentonite waterstop to hydrate prior to concrete encapsulation.

B. WATERSTOP SURFACE PREPARATION:

1. Remove dirt, debris, oil, grease, cement laitance, or other foreign matter which will impair or negatively affect the installation of the waterstop. Protect adjacent material surfaces from damage or contamination during installation operations.

C. WATERSTOP GENERAL INSTALLATION GUIDELINES:

1. Install WATERSTOP-RX in all applicable vertical and horizontal cast-in-place concrete construction joints; and around applicable penetrations and structural members. Place WATERSTOP-RX to allow for minimum 3” (75 mm) concrete coverage on all sides (2” (50 mm) coverage for RX-102).
2. Apply WB-ADHESIVE by brush 1" to 1-1/4" (25 - 30 mm) wide, to dry, smooth concrete surface maintaining a minimum 3” (75 mm) depth within the concrete joint. Allow adhesive to dry until the adhesive cures black (5-10 minutes in warm weather; cold weather will extend drying time).
3. Remove release paper from coil of WATERSTOP-RX. Firmly press the entire length of WATERSTOP-RX against the cured (black) adhesive. Verify 3” (75 mm) minimum concrete coverage will be maintained over entire placement of waterstop. Place in maximum practical lengths to minimize coil end joints.
4. Tightly butt coil ends together to form continuous waterstop. Do not overlap coil ends. Where required, cut coils with sharp knife or utility blade to fit coil ends together without overlapping.
5. Following Steps 1-3, install waterstop around all applicable through wall pipes and mechanical penetrations; and around all applicable structural elements like metal H-Piles through the slab.
6. Protect installed waterstop from prehydration prior to concrete placement and product encapsulation. Replace any waterstop material that exhibits significant expansion prior to concrete encapsulation.

D. WATERSTOP CLEAN UP:

1. Clean areas where adjacent finished surfaces are soiled by work of this Section. Remove all tools, equipment, and remaining product on-site. Dispose of section work debris and damaged product following all applicable regulations.

E. WATERSTOPS QUALITY ASSURANCE

1. Verification of Details: Contractor is to notify the Engineer immediately of any detail, note, or specification which does not comply with current manufacturer's installation requirements.
2. Adhesion: Waterstop-RX is not a self-adhering product. Volclay WB-Adhesive is required to secure Waterstop-RX. No other adhesive should be used. Mechanical fasteners can be used in conjunction with WB-Adhesive, but should not be used solely to secure the waterstop.
3. Installation Instructions: Components and installation procedures shall be in accordance with current manufacturer's printed specifications and recommendations. Verify that the technical data submittals are the most current with manufacturer - (847)392-5800.
4. Expansion Joints: WATERSTOP-RX is not designed, nor intended for waterproofing or sealing expansion joints. Responsibility of waterproofing expansion joints is of others.
5. Concrete: Concrete shall be structural grade quality with a minimum 3000 psi tensile strength. For RX-101 and RX-101T a minimum thickness of 8" (200 mm) with two rows of reinforcing steel is required. For RX-102 a minimum thickness of 5" (125 mm) with a single row of reinforcing steel is required.
6. Protect installed waterstop from prehydration prior to concrete placement and product encapsulation. Replace any waterstop material that exhibits significant expansion prior to concrete encapsulation.

3.21 GUARANTEES:

A. Material. All materials such as pipes, pumps, fittings, vaults, equipment, etc. shall have a minimum one (1) year guarantee by the lake Contractor for defects in material and workmanship from the date of installation. The membrane liner will be guaranteed by the lining manufacturer as specified elsewhere in this specification.

B. Workmanship. The lake Contractor shall guarantee his workmanship for a period of one (1) year. The entire lake system installation including pumps, pipes, equipment, lining, etc. shall exhibit no measurable loss from seepage. Should measurable losses, in excess of calculated evaporation losses, occur during a one week “test period” after filling of the lake system, the lake Contractor shall be responsible for locating and eliminating the leakage, at no

additional cost to the Owner. If, due to the fault of the lake Contractor's workmanship, the lake must be drained to effect repairs, the lake Contractor shall be responsible for the cost of replacing and refilling the lake water to the designated water surface elevations.

C. As-builts: The lake Contractor shall provide the Owner with a red-lined print indicating any and all changes, revisions, relocations, etc. done in the field during construction. As-built drawings shall include product data sheets on all parts and equipment used in the lake mechanical system.

END OF SECTION 042000

SECTION 260519 - LOW-VOLTAGE ELECTRICAL POWER CONDUCTORS AND CABLES

PART 1 - GENERAL

1.1 SUMMARY

A. Section Includes:

1. Building wires and cables rated 600 V and less.
2. Connectors, splices, and terminations rated 600 V and less.

B. Related Requirements:

1. Section 260513 "Medium-Voltage Cables" for single-conductor and multiconductor cables, cable splices, and terminations for electrical distribution systems with 2001 to 35,000 V.
2. Section 260523 "Control-Voltage Electrical Power Cables" for control systems communications cables and Classes 1, 2 and 3 control cables.
3. Section 271500 "Communications Horizontal Cabling" for cabling used for voice and data circuits.

1.2 ACTION SUBMITTALS

A. Product Data: For each type of product.

1.3 INFORMATIONAL SUBMITTALS

A. Field quality-control reports.

PART 2 - PRODUCTS

2.1 CONDUCTORS AND CABLES

A. Copper Conductors: Comply with NEMA WC 70/ICEA S-95-658.

B. Conductor Insulation: Comply with NEMA WC 70/ICEA S-95-658 for THHN/THWN-2.

C. Multiconductor Cable: Comply with NEMA WC 70/ICEA S-95-658 for armored cable, Type AC, metal-clad cable, Type MC with ground wire.

D. VFC Cable:

1. Comply with UL 1277, UL 1685, and NFPA 70 for Type TC-ER cable.
2. Type TC-ER with oversized crosslinked polyethylene insulation, spiral-wrapped foil plus 85 percent coverage braided shields and insulated full-size ground wire and sunlight- and oil-resistant outer PVC jacket.

2.2 CONNECTORS AND SPLICES

A. Description: Factory-fabricated connectors and splices of size, ampacity rating, material, type, and class for application and service indicated.

2.3 SYSTEM DESCRIPTION

A. Electrical Components, Devices, and Accessories: Listed and labeled as defined in NFPA 70, by a qualified testing agency, and marked for intended location and application.

B. Comply with NFPA 70.

PART 3 - EXECUTION

3.1 CONDUCTOR MATERIAL APPLICATIONS

A. Feeders: Copper Solid for No. 10 AWG and smaller; stranded for No. 8 AWG and larger.

B. Branch Circuits: Copper. Solid for No. 10 AWG and smaller; stranded for No. 8 AWG and larger, except VFC cable, which shall be extra flexible stranded.

3.2 CONDUCTOR INSULATION AND MULTICONDUCTOR CABLE APPLICATIONS AND WIRING METHODS

A. Service Entrance: Type THHN/THWN-2, single conductors in raceway.

B. Exposed Feeders: Type THHN/THWN-2, single conductors in raceway.

C. Feeders Concealed in Concrete, below Slabs-on-Grade, and Underground: Type THHN/THWN-2, single conductors in raceway.

D. Branch Circuits Concealed in Concrete, below Slabs-on-Grade, and Underground: Type THHN/THWN-2, single conductors in raceway.

E. Cord Drops and Portable Appliance Connections: Type SO, hard service cord with stainless-steel, wire-mesh, strain relief device at terminations to suit application.

F. VFC Output Circuits: Type XHHW-2 in metal conduit.

3.3 INSTALLATION OF CONDUCTORS AND CABLES

A. Conceal cables in finished walls, ceilings, and floors unless otherwise indicated.

B. Complete raceway installation between conductor and cable termination points according to Section 260533 "Raceways and Boxes for Electrical Systems" prior to pulling conductors and cables.

C. Use manufacturer-approved pulling compound or lubricant where necessary; compound used must not deteriorate conductor or insulation. Do not exceed manufacturer's recommended maximum pulling tensions and sidewall pressure values.

D. Use pulling means, including fish tape, cable, rope, and basket-weave wire/cable grips, that will not damage cables or raceway.

E. Install exposed cables parallel and perpendicular to surfaces of exposed structural members, and follow surface contours where possible.

F. Support cables according to Section 260529 "Hangers and Supports for Electrical Systems."

3.4 CONNECTIONS

A. Tighten electrical connectors and terminals according to manufacturer's published torque-tightening values. If manufacturer's torque values are not indicated, use those specified in UL 486A-486B.

B. Make splices, terminations, and taps that are compatible with conductor material and that possess equivalent or better mechanical strength and insulation ratings than unspliced conductors.

1. Use oxide inhibitor in each splice, termination, and tap for aluminum conductors.

C. Wiring at Outlets: Install conductor at each outlet, with at least 12 inches of slack.

3.5 IDENTIFICATION

A. Identify and color-code conductors and cables according to Section 260553 "Identification for Electrical Systems."

B. Identify each spare conductor at each end with identity number and location of other end of conductor, and identify as spare conductor.

3.6 SLEEVE AND SLEEVE-SEAL INSTALLATION FOR ELECTRICAL PENETRATIONS

A. Install sleeves and sleeve seals at penetrations of exterior floor and wall assemblies. Provide EYS conduit seals in wet locations.

3.7 FIRESTOPPING

A. Apply firestopping to electrical penetrations of fire-rated floor and wall assemblies to restore original fire-resistance rating of assembly according to Section 078413 "Penetration Firestopping."

3.8 FIELD QUALITY CONTROL

A. Perform the following tests and inspections:

1. After installing conductors and cables and before electrical circuitry has been energized, test service entrance and feeder conductors for compliance with requirements.

2. Perform each visual and mechanical inspection and electrical test stated in NETA Acceptance Testing Specification. Certify compliance with test parameters.

B. Test and Inspection Reports: Prepare a written report to record the following:

1. Procedures used.
2. Results that comply with requirements.
3. Results that do not comply with requirements and corrective action taken to achieve compliance with requirements.

C. Cables will be considered defective if they do not pass tests and inspections.

END OF SECTION 260519

SECTION 260526 - GROUNDING AND BONDING FOR ELECTRICAL SYSTEMS

PART 1 - GENERAL

1.1 SUMMARY

A. Section includes grounding and bonding systems and equipment.

1.2 ACTION SUBMITTALS

A. Product Data: For each type of product indicated.

PART 2 - PRODUCTS

2.1 MANUFACTURERS

A. Burndy or approved equal

2.2 SYSTEM DESCRIPTION

A. Electrical Components, Devices, and Accessories: Listed and labeled as defined in NFPA 70, by a qualified testing agency, and marked for intended location and application.

B. Comply with UL 467 for grounding and bonding materials and equipment.

2.3 CONDUCTORS

A. Insulated Conductors: tinned-copper wire or cable insulated for 600 V unless otherwise required by applicable Code or authorities having jurisdiction.

B. Bare Copper Conductors:

1. Solid Conductors: ASTM B 3.
2. Stranded Conductors: ASTM B 8.
3. Tinned Conductors: ASTM B 33.
4. Bonding Cable: 28 kcmil, 14 strands of No. 17 AWG conductor, 1/4 inch in diameter.
5. Bonding Conductor: No. 4 or No. 6 AWG, stranded conductor.

6. Bonding Jumper: Copper tape, braided conductors terminated with copper ferrules; 1-5/8 inches wide and 1/16 inch thick.
7. Tinned Bonding Jumper: Tinned-copper tape, braided conductors terminated with copper ferrules; 1-5/8 inches wide and 1/16 inch thick.

2.4 CONNECTORS

A. Listed and labeled by an NRTL acceptable to authorities having jurisdiction for applications in which used and for specific types, sizes, and combinations of conductors and other items connected.

B. Bolted Connectors for Conductors and Pipes: Copper or copper alloy.

C. Welded Connectors: Exothermic-welding kits of types recommended by kit manufacturer for materials being joined and installation conditions.

D. Bus-Bar Connectors: Mechanical type, cast silicon bronze, solderless [exothermic]-type wire terminals, and long-barrel, two-bolt connection to ground bus bar.

2.5 GROUNDING ELECTRODES

A. Ground Rods: Copper-clad steel 5/8 inch by 10 feet

PART 3 - EXECUTION

3.1 APPLICATIONS

A. Conductors: Install solid conductor for No. 8 AWG and smaller, and stranded conductors for No. 6 AWG and larger unless otherwise indicated.

B. Underground Grounding Conductors: Install bare tinned-copper conductor, No. 6 AWG minimum.

1. Bury at least 30 inches below grade.

C. Conductor Terminations and Connections:

1. Pipe and Equipment Grounding Conductor Terminations: Bolted connectors.
2. Underground Connections: Welded connectors except at test wells and as otherwise indicated.

3. Connections to Ground Rods at Test Wells: Bolted connectors.
4. Connections to Structural Steel: Welded connectors.

3.2 GROUNDING AT THE SERVICE

A. Equipment grounding conductors and grounding electrode conductors shall be connected to the ground bus. Install a main bonding jumper between the neutral and ground buses.

3.3 GROUNDING UNDERGROUND DISTRIBUTION SYSTEM COMPONENTS

A. Comply with IEEE C2 grounding requirements.

B. Grounding Manholes and Handholes: Install a driven ground rod through manhole or handhole floor, close to wall, and set rod depth so 4 inches will extend above finished floor. If necessary, install ground rod before manhole is placed and provide No. 1/0 AWG bare, tinned-copper conductor from ground rod into manhole through a waterproof sleeve in manhole wall. Protect ground rods passing through concrete floor with a double wrapping of pressure-sensitive insulating tape or heat-shrunk insulating sleeve from 2 inches above to 6 inches below concrete. Seal floor opening with waterproof, nonshrink grout.

C. Grounding Connections to Manhole Components: Bond exposed-metal parts such as inserts, cable racks, pulling irons, ladders, and cable shields within each manhole or handhole, to ground rod or grounding conductor. Make connections with No. 4 AWG minimum, stranded, hard-drawn copper bonding conductor. Train conductors level or plumb around corners and fasten to manhole walls. Connect to cable armor and cable shields according to written instructions by manufacturer of splicing and termination kits.

D. Pad-Mounted Transformers and Switches: Install two ground rods around the pad. Ground pad-mounted equipment and noncurrent-carrying metal items associated with substations by connecting them to underground cable and grounding electrodes. Install tinned-copper conductor not less than No. 2 AWG for taps to equipment grounding terminals.

3.4 EQUIPMENT GROUNDING

A. Install insulated equipment grounding conductors with all feeders and branch circuits.

B. Install insulated equipment grounding conductors with the following items, in addition to those required by NFPA 70:

1. Feeders and branch circuits.
2. Lighting circuits.
3. Receptacle circuits.
4. Single-phase motor and appliance branch circuits.
5. Three-phase motor and appliance branch circuits.
6. Flexible raceway runs.
7. Armored and metal-clad cable runs.
8. Busway Supply Circuits: Install insulated equipment grounding conductor from grounding bus in the switchgear, switchboard, or distribution panel to equipment grounding bar terminal on busway.
9. X-Ray Equipment Circuits: Install insulated equipment grounding conductor in circuits supplying x-ray equipment.

C. Air-Duct Equipment Circuits: Install insulated equipment grounding conductor to duct-mounted electrical devices operating at 120 V and more, including air cleaners, heaters, dampers, humidifiers, and other duct electrical equipment. Bond conductor to each unit and to air duct and connected metallic piping.

D. Water Heater, Heat-Tracing, and Antifrost Heating Cables: Install a separate insulated equipment grounding conductor to each electric water heater and heat-tracing cable. Bond conductor to heater units, piping, connected equipment, and components.

E. Poles Supporting Outdoor Lighting Fixtures: Install grounding electrode and a separate insulated equipment grounding conductor in addition to grounding conductor installed with branch-circuit conductors.

F. Metallic Fences: Comply with requirements of IEEE C2.

1. Grounding Conductor: Bare tinned copper, not less than No. 6 AWG.
2. Gates: Shall be bonded to the grounding conductor with a flexible bonding jumper.
3. Barbed Wire: Strands shall be bonded to the grounding conductor.

3.5 INSTALLATION

A. Grounding Conductors: Route along shortest and straightest paths possible unless otherwise indicated or required by Code. Avoid obstructing access or placing conductors where they may be subjected to strain, impact, or damage.

B. Ground Bonding Common with Lightning Protection System: Comply with NFPA 780 and UL 96 when interconnecting with lightning protection system. Bond electrical power system ground directly to lightning protection system grounding conductor at closest point to electrical service grounding electrode. Use bonding conductor sized same as system grounding electrode conductor, and install in conduit.

C. Ground Rods: Drive rods until tops are 2 inches below finished floor or final grade unless otherwise indicated.

1. Interconnect ground rods with grounding electrode conductor below grade and as otherwise indicated. Make connections without exposing steel or damaging coating if any.
2. For grounding electrode system, install at least **two** rods spaced at least 6' laterally from each other and located at least the same distance from other grounding electrodes, and connect to the service grounding electrode conductor.

D. Test Wells: Ground rod driven through drilled hole in bottom of handhole. Handholes are specified in Section 260543 "Underground Ducts and Raceways for Electrical Systems," and shall be at least 12 inches deep, with cover.

1. Test Wells: Install at least one test well for each service unless otherwise indicated. Install at the ground rod electrically closest to service entrance. Set top of test well flush with finished grade or floor.

E. Bonding Straps and Jumpers: Install in locations accessible for inspection and maintenance except where routed through short lengths of conduit.

1. Bonding to Structure: Bond straps directly to basic structure, taking care not to penetrate any adjacent parts.
2. Bonding to Equipment Mounted on Vibration Isolation Hangers and Supports: Install bonding so vibration is not transmitted to rigidly mounted equipment.
3. Use exothermic-welded connectors for outdoor locations; if a disconnect-type connection is required, use a bolted clamp.

F. Grounding and Bonding for Piping:

1. Metal Water Service Pipe: Install insulated copper grounding conductors, in conduit, from building's main service equipment, or grounding bus, to main metal water service entrances to building. Connect grounding conductors to main metal water service pipes; use a bolted clamp connector or bolt a lug-type connector to a pipe flange by using one of the lug bolts of the flange. Where a dielectric main water fitting is installed,

connect grounding conductor on street side of fitting. Bond metal grounding conductor conduit or sleeve to conductor at each end.

2. Water Meter Piping: Use braided-type bonding jumpers to electrically bypass water meters. Connect to pipe with a bolted connector.
3. Bond each aboveground portion of gas piping system downstream from equipment shutoff valve.

3.6 FIELD QUALITY CONTROL

A. Perform tests and inspections. Inspect physical and mechanical condition. Verify tightness of accessible, bolted, electrical connections with a calibrated torque wrench according to manufacturer's written instructions.

END OF SECTION 260526

SECTION 260553 - IDENTIFICATION FOR ELECTRICAL SYSTEMS

PART 1 - GENERAL

1.1 SUMMARY

A. Section Includes:

1. Identification for raceways.
2. Identification of power and control cables.
3. Identification for conductors.
4. Underground-line warning tape.
5. Warning labels and signs.
6. Instruction signs.
7. Equipment identification labels, including arc-flash warning labels.
8. Miscellaneous identification products.

1.2 ACTION SUBMITTALS

A. Product Data: For each type of product.

B. Delegated-Design Submittal: For arc-flash hazard study.

PART 2 - PRODUCTS

2.1 PERFORMANCE REQUIREMENTS

A. Comply with ASME A13.1and IEEE C2.

B. Comply with NFPA 70.

C. Comply with 29 CFR 1910.144 and 29 CFR 1910.145.

D. Comply with ANSI Z535.4 for safety signs and labels.

E. Adhesive-attached labeling materials, including label stocks, laminating adhesives, and inks used by label printers, shall comply with UL 969.

2.2 COLOR AND LEGEND REQUIREMENTS

A. Raceways and Cables Carrying Circuits at 600 V or Less:

1. White letters on a Black field, letters shall be min. ½" in height.
2. Legend: Indicate voltage and service type.

B. Warning labels and signs shall include, but are not limited to, the following legends:

1. Multiple Power Source Warning: "DANGER - ELECTRICAL SHOCK HAZARD - EQUIPMENT HAS MULTIPLE POWER SOURCES."
2. Workspace Clearance Warning: "WARNING - OSHA REGULATION - AREA IN FRONT OF ELECTRICAL EQUIPMENT MUST BE KEPT CLEAR FOR 36 INCHES."

2.3 LABELS

A. Vinyl Labels for Raceways Carrying Circuits at 600 V or Less: Preprinted, flexible labels laminated with a clear, weather- and chemical-resistant coating and matching wraparound clear adhesive tape for securing label ends.

B. Self-Adhesive Labels:
1. Preprinted, 3-mil- thick, vinyl flexible label with acrylic pressure-sensitive adhesive.
2. Vinyl, thermal, transfer-printed, 3-mil- thick, multicolor, weather- and UV-resistant, pressure-sensitive adhesive labels, configured for display on front cover, door, or other access to equipment unless otherwise indicated.

a. Nominal Size: 3.5-by-5-inch.

2.4 TAPES AND STENCILS:

A. Marker Tapes: Vinyl or vinyl-cloth, self-adhesive wraparound type, with circuit identification legend machine printed by thermal transfer or equivalent process.

B. Self-Adhesive Vinyl Tape: Colored, heavy duty, waterproof, fade resistant; not less than 3 mils thick by 1 to 2 inches wide; compounded for outdoor use.

C. Floor Marking Tape: 2-inch- wide, 5-mil pressure-sensitive vinyl tape, with yellow and black stripes and clear vinyl overlay.

D. Underground-Line Warning Tape

1. Tape:

a. Recommended by manufacturer for the method of installation and suitable to identify and locate underground electrical and communications utility lines.
b. Printing on tape shall be permanent and shall not be damaged by burial operations.
c. Tape material and ink shall be chemically inert and not subject to degradation when exposed to acids, alkalis, and other destructive substances commonly found in soils.

2. Color and Printing:

a. Comply with ANSI Z535.1, ANSI Z535.2, ANSI Z535.3, ANSI Z535.4, and ANSI Z535.5.
b. Inscriptions for Red-Colored Tapes: "ELECTRIC LINE, HIGH VOLTAGE"
c. Inscriptions for Orange-Colored Tapes: "TELEPHONE CABLE, CATV CABLE, COMMUNICATIONS CABLE, OPTICAL FIBER CABLE"

3. Tag: **Type I**

a. Pigmented polyolefin, bright colored, continuous-printed on one side with the inscription of the utility, compounded for direct-burial service.
b. Width: 3 inches.
c. Thickness: 4 mils.Weight: 18.5 lb/1000 sq. ft..
d. Tensile according to ASTM D 882: 30 lbf and 2500 psi.

4. Tag: **Type ID**:

a. Detectable three-layer laminate, consisting of a printed pigmented polyolefin film, a solid aluminum-foil core, and a clear protective film that allows inspection of the continuity of the conductive core; bright colored, continuous-printed on one side with the inscription of the utility, compounded for direct-burial service.
b. Width: 3 inches.
c. Overall Thickness: 5 mils.
d. Foil Core Thickness: 0.35 mil.
e. Weight: 28 lb/1000 sq. ft..
f. Tensile according to ASTM D 882: 70 lbf and 4600 psi.

5. Tag: **Type IID**:

a. Reinforced, detectable three-layer laminate, consisting of a printed pigmented woven scrim, a solid aluminum-foil core, and a clear protective film that allows inspection of the continuity of the

conductive core; bright-colored, continuous-printed on one side with the inscription of the utility, compounded for direct-burial service.

b. Width: 3 inches
c. Overall Thickness: 8 mils.
d. Foil Core Thickness: 0.35 mil.
e. Weight: 34 lb/1000 sq. ft. .
f. Tensile according to ASTM D 882: 300 lbf and 12,500 psi.

2.5 Tags

A. Metal Tags: Brass or aluminum, 2 by 2 by 0.05 inch with stamped legend, punched for use with self-locking cable tie fastener.

B. Nonmetallic Preprinted Tags: Polyethylene tags, 0.023 inch thick, color-coded for phase and voltage level, with factory screened or printed permanent designations; punched for use with self-locking cable tie fastener.

C. Write-On Tags:
1. Polyester Tags: 0.015 inch thick, with corrosion-resistant grommet and cable tie for attachment to raceway, conductor, or cable.
2. Marker for Tags: Permanent, waterproof, black ink marker recommended by tag manufacturer.
3. Marker for Tags: Machine-printed, permanent, waterproof, black ink marker recommended by printer manufacturer.

2.6 Signs

A. Baked-Enamel Signs:

1. Preprinted aluminum signs, punched or drilled for fasteners, with colors, legend, and size required for application.
2. 1/4-inch grommets in corners for mounting.
3. Nominal Size: 7 by 10 inches

B. Metal-Backed Butyrate Signs:

1. Weather-resistant, nonfading, preprinted, cellulose-acetate butyrate signs, with 0.0396-inch galvanized-steel backing and with colors, legend, and size required for application.
2. 1/4-inch grommets in corners for mounting.
3. Nominal Size: 10 by 14 inches.

C. Laminated Acrylic or Melamine Plastic Signs:

1. Engraved legend.
2. Thickness:

    a. For signs up to 20 sq. inches, minimum 1/16-inch.
    b. For signs larger than 20 sq. inches , 1/8 inch thick.
    c. Engraved legend with white letters on black face
    d. Punched or drilled for mechanical fasteners.
    e. Framed with mitered acrylic molding and arranged for attachment at applicable equipment.

2.7 CABLE TIES

A. General-Purpose Cable Ties: Fungus inert, self-extinguishing, one piece, self-locking, Type 6/6 nylon.

1. Minimum Width: 3/16 inch.
2. Tensile Strength at 73 deg F according to ASTM D 638: 12,000 psi.
3. Temperature Range: Minus 40 to plus 185 deg F.
4. Color: Black, except where used for color-coding.

B. UV-Stabilized Cable Ties: Fungus inert, designed for continuous exposure to exterior sunlight, self-extinguishing, one piece, self-locking, Type 6/6 nylon.

1. Minimum Width: 3/16 inch.
2. Tensile Strength at 73 deg F according to ASTM D 638: 12,000 psi.
3. Temperature Range: Minus 40 to plus 185 deg F.
4. Color: Black.

C. Plenum-Rated Cable Ties: Self-extinguishing, UV stabilized, one piece, self-locking.

1. Minimum Width: 3/16 inch.
2. Tensile Strength at 73 deg F according to ASTM D 638: 7000 psi.
3. UL 94 Flame Rating: 94V-0.
4. Temperature Range: Minus 50 to plus 284 deg F.
5. Color: Black.

2.8 MISCELLANEOUS IDENTIFICATION PRODUCTS

A. Fasteners for Labels and Signs: Self-tapping, stainless-steel screws or stainless-steel machine screws with nuts and flat and lock washers.

PART 3 - EXECUTION

3.1 INSTALLATION

A. Install identification materials and devices at locations for most convenient viewing without interference with operation and maintenance of equipment.

B. Apply identification devices to surfaces that require finish after completing finish work.

C. Attach signs and plastic labels that are not self-adhesive type with mechanical fasteners appropriate to the location and substrate.

D. Attach plastic raceway and cable labels that are not self-adhesive type with clear vinyl tape, with adhesive appropriate to the location and substrate.

E. Cable Ties: For attaching tags. Use general-purpose type, except as listed below:

1. Outdoors: UV-stabilized nylon.
2. In Spaces Handling Environmental Air: Plenum rated.

F. During backfilling of trenches, install continuous underground-line warning tape directly above cable or raceway at 6 to 8 inches below finished grade. Use multiple tapes where width of multiple lines installed in a common trench or concrete envelope exceeds 16 inches overall.

3.2 IDENTIFICATION SCHEDULE

A. Accessible Raceways and Metal-Clad Cables, 600 V or Less, for Service, Feeder, and Branch Circuits, More Than 20 A and 120V to Ground: Identify with self-adhesive vinyl label. Install labels at 10-foot maximum intervals.

B. Accessible Raceways and Cables within Buildings: Identify the covers of each junction and pull box of the following systems with self-adhesive vinyl labels containing the wiring system legend and system voltage. System legends shall be as follows:

1. "EMERGENCY POWER."
2. "POWER."
3. "UPS."

C. Power-Circuit Conductor Identification, 600 V or Less: For conductors in vaults, pull and junction boxes, manholes, and handholes, use color-coding conductor tape to identify the phase.

1. Color-Coding for Phase-Voltage- Identification, 600 V or Less: Use industry standard colors for ungrounded service feeder and branch-circuit]conductors.

a. Field-Applied, Color-Coding Conductor Tape: Apply in half-lapped turns for a minimum distance of 6 inches from terminal points and in boxes where splices or taps are made. Apply last two turns of tape with no tension to prevent possible unwinding. Locate bands to avoid obscuring factory cable markings.

D. Control-Circuit Conductor Identification: For conductors and cables in pull and junction boxes, manholes, and handholes, use self-adhesive, self-laminating polyester labels with the conductor or cable designation, origin, and destination.

E. Control-Circuit Conductor Termination Identification: For identification at terminations, provide heat-shrink preprinted tubes, self-laminating polyester labels, self-adhesive vinyl labels with the conductor designation.

F. Conductors to Be Extended in the Future: Attach marker tape to conductors and list source.

G. Auxiliary Electrical Systems Conductor Identification: Identify field-installed alarm, control, and signal connections.

1. Identify conductors, cables, and terminals in enclosures and at junctions, terminals, and pull points. Identify by system and circuit designation.
2. Use system of marker-tape designations that is uniform and consistent with system used by manufacturer for factory-installed connections.
3. Coordinate identification with Project Drawings, manufacturer's wiring diagrams, and operation and maintenance manual.

H. Locations of Underground Lines: Identify with underground-line warning tape for power, lighting, communication, and control wiring and optical-fiber cable.

1. Limit use of underground-line warning tape to direct-buried cables.
2. Install underground-line warning tape for direct-buried cables and cables in raceways.

I. Workspace Indication: Install floor marking tape to show working clearances in the direction of access to live parts. Workspace shall comply with NFPA 70 and

29 CFR 1926.403 unless otherwise indicated. Do not install at flush-mounted panelboards and similar equipment in finished spaces.

J. Warning Labels for Indoor Cabinets, Boxes, and Enclosures for Power and Lighting: Metal-backed, butyrate warning signs.

1. Comply with 29 CFR 1910.145.
2. Identify system voltage with black letters on an orange background.
3. Apply to exterior of door, cover, or other access.
4. For equipment with multiple power or control sources, apply to door or cover of equipment, including, but not limited to, the following:

    a. Power-transfer switches.
    b. Controls with external control power connections.

K. Arc Flash Warning Labeling: Self-adhesive thermal transfer vinyl labels.

1. Comply with NFPA 70E and ANSI Z535.4.
2. Comply with Section 260574 "Overcurrent Protective Device Arc-Flash Study" requirements for arc-flash warning labels.

L. Operating Instruction Signs: Install instruction signs to facilitate proper operation and maintenance of electrical systems and items to which they connect. Install instruction signs with approved legend where instructions are needed for system or equipment operation.

M. Emergency Operating Instruction Signs: Install instruction signs with white legend on a red background with minimum 3/8-inch- high letters for emergency instructions at equipment used for power transfer emergency operations.

N. Equipment Identification Labels: On each unit of equipment, install unique designation label that is consistent with wiring diagrams, schedules, and operation and maintenance manual.

1. Labeling Instructions:
    a. Outdoor Equipment: Engraved, laminated acrylic or melamine label] [Stenciled legend 4 inches high.
    b. Elevated Components: Increase sizes of labels and letters to those appropriate for viewing from the floor.
    c. Unless labels are provided with self-adhesive means of attachment, fasten them with appropriate mechanical fasteners that do not change the NEMA or NRTL rating of the enclosure.

END OF SECTION 260553

SECTION 260923 - LIGHTING CONTROL DEVICES

PART 1 - GENERAL

1.1 SUMMARY

A. Section Includes:

1. Time switches.
2. Photoelectric switches.
3. Outdoor motion sensors.

B. Related Requirements:

1. Section 262726 "Wiring Devices" for wall-box dimmers, wall-switch occupancy sensors, and manual light switches.

1.2 ACTION SUBMITTALS

A. Product Data: For each type of product.

1.3 INFORMATIONAL SUBMITTALS

A. Field quality-control reports.

1.4 CLOSEOUT SUBMITTALS

A. Operation and maintenance data

PART 2 - PRODUCTS

2.1 TIME SWITCHES

A. Electronic Time Switches: Solid state, programmable, with alphanumeric display; complying with UL 917.

1. Listed and labeled as defined in NFPA 70, by a qualified testing agency, and marked for intended location and application.
2. Contact Configuration: compatible with relays selected.
3. Contact Rating: 20-A driver load, 240-Vac.

4. Programs: Eight on-off set points on a 24-hour schedule and an annual holiday schedule that overrides the weekly operation on holidays.
5. Programs: Two on-off set points on a 24-hour schedule, allowing different set points for each day of the week and an annual holiday schedule that overrides the weekly operation on holidays.
6. Circuitry: Allow connection of a photoelectric relay as substitute for on-off function of a program on selected channels.
7. Astronomic Time: All channels.
8. Automatic daylight savings time changeover.
9. Battery Backup: Not less than seven days reserve, to maintain schedules and time clock.

2.2 OUTDOOR PHOTOELECTRIC SWITCHES

A. Description: Solid state, with compatible dry contacts rated to operate connected load, complying with UL 773.

1. Listed and labeled as defined in NFPA 70, by a qualified testing agency, and marked for intended location and application.
2. Light-Level Monitoring Range: 1.5 to 10 fc with an adjustment for turn-on and turn-off levels within that range.
3. Time Delay: Thirty-second minimum, to prevent false operation.
4. Lightning Arrester: N/A.
5. Mounting: Twist lock complying with NEMA C136.10, with base.

2.3 OUTDOOR MOTION SENSORS

A. General Requirements for Sensors: Solid-state outdoor motion sensors.

1. Listed and labeled as defined in NFPA 70, by a qualified testing agency, and marked for intended location and application**,** and shall comply with California Title 24.
2. Dual-technology (PIR and infrared) type, weatherproof. Detect occurrences of 6-inch-minimum movement of any portion of a human body that presents a target of not less than 36 sq. in. Comply with UL 773A.
3. Switch Rating:

   a. Lighting-Fixture-Mounted Sensor: manufacturer supplied of sufficient capacity for fixture rated output wattage inc. driver.

4. Switch Type: SP, field selectable automatic "on," or manual "on" automatic "off.", with bypass switch to override the "on" function in case of sensor failure.

5. Voltage: 240V type.
6. Detector Coverage:

    a. Standard Range: 210-degree field of view, with a minimum coverage area of 900 sq. ft..
    b. Long Range: 180-degree field of view and 110-foot detection range.
7. Concealed, field-adjustable, "off" time-delay selector at up to 30 minutes.
8. Concealed "off" time-delay selector at 30 seconds, and 5, 10, and 20 minutes.
9. Adaptive Technology: Self-adjusting circuitry detects and memorizes usage patterns of the space and helps eliminate false "off" switching.
10. Operating Ambient Conditions: Suitable for operation in ambient temperatures ranging from minus 40 to plus 130 deg F, rated as "raintight" according to UL 773A.

2.4 LIGHTING CONTACTORS

A. Description: Electrically operated and electrically held, combination-type lighting contactors with nonfused disconnect, complying with NEMA ICS 2 and UL 508.

1. Current Rating for Switching: Listing or rating consistent with type of load served, including tungsten filament, inductive, and high-inrush ballast (ballast with 15 percent or less total harmonic distortion of normal load current).
2. Fault Current Withstand Rating: Equal to or exceeding the available fault current at the point of installation.
3. Enclosure: Comply with NEMA 250.
4. Provide with control and pilot devices as indicated on Drawings, matching the NEMA type specified for the enclosure.

2.5 CONDUCTORS AND CABLES

A. Power Wiring to Supply Side of Remote-Control Power Sources: Not smaller than No. 12 AWG. Comply with requirements in Section 260519 "Low-Voltage Electrical Power Conductors and Cables."

B. Classes 2 and 3 Control Cable: Multiconductor cable with stranded-copper conductors not smaller than No. 18AWG. Comply with requirements in Section 260519 "Low-Voltage Electrical Power Conductors and Cables."

C. Class 1 Control Cable: Multiconductor cable with stranded-copper conductors not smaller than No. 14AWG. Comply with requirements in Section 260519 "Low-Voltage Electrical Power Conductors and Cables."

PART 3 - EXECUTION

3.1 INSTALLATION

A. Install and aim sensors in locations to achieve not less than 90 percent coverage of areas indicated. Provide shield and aim as necessary to allow for full intended solar-measurement based function. Do not exceed coverage limits specified in manufacturer's written instructions.

B. Occupancy Adjustments: When requested within 12 months from date of Substantial Completion, provide on-site assistance in adjusting sensors to suit actual occupied conditions. Provide up to two visits to Project during other-than-normal occupancy hours for this purpose.

1. For occupancy and motion sensors, verify operation at outer limits of detector range. Set time delay to suit Owner's operations.

C. Mount electrically held lighting contactors with elastomeric isolator pads to eliminate structure-borne vibration, unless contactors are installed in an enclosure with factory-installed vibration isolators.

D. Wiring Method: Comply with Section 260519 "Low-Voltage Electrical Power Conductors and Cables." Minimum conduit size is 1/2 inch.

E. Identify components and power and control wiring according to Section 260553 "Identification for Electrical Systems."

3.2 FIELD QUALITY CONTROL

A. Testing Agency: Engage a qualified testing agency to evaluate lighting control devices and perform tests and inspections.

B. Perform the following tests and inspections with the assistance of a factory-authorized service representative:

1. Operational Test: After installing time switches and sensors, and after electrical circuitry has been energized, start units to confirm proper unit operation.
2. Test and adjust controls and safeties. Replace damaged and malfunctioning controls and equipment.

C. Lighting control devices will be considered defective if they do not pass tests and inspections.

D. Prepare test and inspection reports.

END OF SECTION 260923

SECTION 260943.23 - RELAY-BASED LIGHTING CONTROLS

PART 1 - GENERAL

1.1 SUMMARY

A. Section includes lighting control panels using electrically held relays for switching.

1.2 ACTION SUBMITTALS

A. Product Data: For each type of product.

B. Shop Drawings: For each relay panel and related equipment.

1. Include dimensioned plans, elevations, sections, and details. Show tabulations of installed devices, equipment features, and ratings.
2. Detail enclosure types and details for types other than NEMA 250, Type 1.
3. Detail wiring partition configuration, current, and voltage ratings.
4. Short-circuit current rating of relays.
5. Include diagrams for power, signal, and control wiring.

1.3 INFORMATIONAL SUBMITTALS

A. Coordination Drawings: Submit evidence that lighting controls are compatible with connected monitoring and control devices and systems specified in other Sections.

1. Show interconnecting signal and control wiring, and interface devices that prove compatibility of inputs and outputs.

B. Field quality-control reports.

C. Sample warranty.

1.4 CLOSEOUT SUBMITTALS

A. Operation and maintenance data.

1.5 DELIVERY, STORAGE, AND HANDLING

A. Handle and prepare panels for installation according to NECA 407.

PART 2 - PRODUCTS

2.1 SYSTEM DESCRIPTION

A. Input signal from field-mounted manual switches, or digital signal sources, shall open or close one or more lighting control relays in the lighting control panels. Any combination of inputs shall be programmable to any number of control relays.

B. Electrical Components, Devices, and Accessories: Listed and labeled as defined in NFPA 70, by a qualified testing agency, and marked for intended location and application.

C. Comply with UL 916.

2.2 PERFORMANCE REQUIREMENTS

A. Seismic Performance: Lighting control panels shall withstand the effects of earthquake motions determined according to ASCE/SEI 7.

1. The term "withstand" means "the unit will remain in place without separation of any parts when subjected to the seismic forces specified and the unit will be fully operational after the seismic event."
2. Component Importance Factor: 1.5.

2.3 LIGHTING CONTROL RELAY PANELS

A. Description: Standalone lighting control panel using electrically latched relays to control lighting and appliances.

B. Lighting Control Panel:

1. A single enclosure with incoming lighting branch circuits, control circuits, switching relays, and on-board timing and control unit.
2. A vertical barrier separating branch circuits from control wiring.

C. Control Unit: Contain the power supply and electronic control for operating and monitoring individual relays.

1. Timing Unit:

    a. 365-day calendar, astronomical clock, and automatic adjustments for daylight savings and leap year.
    b. Clock configurable for 12-hour (A.M./P.M.) or 24-hour format.
    c. Four independent schedules, each having 24 time periods.
    d. Schedule periods settable to the minute.
    e. Day-of-week, day-of-month, day-of-year with one-time or repeating capability.
    f. 6 special date periods.

2. Sequencing Control with Override:

    a. Automatic sequenced on and off switching of selected relays at times set at the timing unit, allowing timed overrides from external switches.
    b. Sequencing control shall operate relays one at a time, completing the operation of all connected relays in not more than 10 seconds.
    c. Override control shall allow any relay connected to it to be switched on or off by a field-deployed manual switch or by an automatic switch, such as an occupancy sensor.
    d. Override control "blink warning" shall warn occupants approximately five minutes before actuating the off sequence.

3. Nonvolatile memory shall retain all setup configurations. After a power failure, the controller shall automatically reboot and return to normal system operation, including accurate time of day and date.

D. Relays: Electrically operated, mechanically held single-pole switch, rated at 20 A at 277 V. Short-circuit current rating shall be not less than 5 kA. Control shall be three-wire, 24-V ac.

E. Relays: Electrically operated, mechanically held single-pole switch, rated at 20 A at 120-V tungsten, 30 A at 277-V ballast, 1.5 hp at 120 V, and 3 hp at 277 V. Short-circuit current rating shall be not less than 14 kA. Control shall be three-wire, 24-V ac.

F. Power Supply: NFPA 70, Class 2, sized for connected equipment, plus 20 percent spare capacity. Powered from a dedicated branch circuit of the panelboard that supplies power to the line side of the relays, sized to provide control power for the local panel-mounted relays, bus system, low-voltage inputs, field-installed occupancy sensors, and photo sensors.

G. Operator Interface:

1. Integral alphanumeric keypad and digital display, and intuitive drop-down menus to assist in programming.
2. Log and display relay on-time.
3. Connect relays to one or more time and sequencing schemes.

2.4 MANUAL SWITCHES AND PLATES

A. Push-Button Switches: Modular, momentary contact, three wire, for operating one or more relays and to override automatic controls.

1. Match color and style specified in Section 262726 "Wiring Devices."
2. Integral green LED pilot light to indicate when circuit is on.
3. Internal white LED locator light to illuminate when circuit is off.

B. Wall Plates: Single and multigang plates as specified in Section 262726 "Wiring Devices."

C. Legend: Engraved or permanently silk-screened on wall plate where indicated. Use designations indicated on Drawings.

2.5 FIELD-MOUNTED SIGNAL SOURCES

A. Daylight Harvesting Switching Controls: Comply with Section 260923 "Lighting Control Devices." Control power may be taken from the lighting control panel, and signal shall be compatible with the relays.

2.6 CONDUCTORS AND CABLES

A. Power Wiring to Supply Side of Class 2 Power Source: Not smaller than No. 12 AWG, complying with Section 260519 "Low-Voltage Electrical Power Conductors and Cables."

B. Classes 2 and 3 Control Cables: Multiconductor cable with copper conductors not smaller than No. 18AWG, complying with Section 260519 "Low-Voltage Electrical Power Conductors and Cables."

C. Class 1 Control Cables: Multiconductor cable with copper conductors not smaller than [No. 14] No. 16AWG, complying with Section 260519 "Low-Voltage Electrical Power Conductors and Cables."

PART 3 - EXECUTION

3.1 EXAMINATION

A. Receive, inspect, handle, and store panels according to NECA 407.

B. Examine panels before installation. Reject panels that are damaged or rusted or have been subjected to water saturation.

C. Examine elements and surfaces to receive panels for compliance with installation tolerances and other conditions affecting performance of the Work.

D. Proceed with installation only after unsatisfactory conditions have been corrected.

3.2 WIRING INSTALLATION

A. Comply with NECA 1.

B. Wiring Method: Install cables in raceways and cable trays except within consoles, cabinets, desks, and counters. Conceal raceway and cables except in unfinished spaces.

1. Install plenum cable in environmental air spaces, including plenum ceilings.
2. Comply with requirements for cable trays specified in Section 260536 "Cable Trays for Electrical Systems."
3. Comply with requirements for raceways and boxes specified in Section 260533 "Raceways and Boxes for Electrical Systems."

C. Wiring Method: Conceal conductors and cables in accessible ceilings, walls, and floors where possible.

D. Wiring within Enclosures: Bundle, lace, and train conductors to terminal points with no excess and without exceeding manufacturer's limitations on bending radii. Install lacing bars and distribution spools.

3.3 PANEL INSTALLATION

A. Comply with NECA 1.

B. Install panels and accessories according to NECA 407.

C. Mount top of trim max. 90 inches above finished floor unless otherwise indicated.

D. Mount panel cabinet plumb and rigid without distortion of box.

E. Install filler plates in unused spaces.

3.4 IDENTIFICATION

A. Identify system components, wiring, cabling, and terminals. Comply with requirements for identification specified in Section 260553 "Identification for Electrical Systems."

B. Identify field-installed conductors, interconnecting wiring, and components; provide warning signs complying with Section 260553 "Identification for Electrical Systems."

C. Create a directory to indicate loads served by each relay; incorporate Owner's final room designations. Obtain approval before installing. Use a PC or typewriter to create directory; handwritten directories are unacceptable.

D. Lighting Control Panel Nameplates: Label each panel with a nameplate complying with requirements for identification specified in Section 260553 "Identification for Electrical Systems."

3.5 FIELD QUALITY CONTROL

A. Manufacturer's Field Service: Engage a factory-authorized service representative to test and inspect components, assemblies, and equipment installations, including connections.

B. Perform the following tests and inspections with the assistance of a factory-authorized service representative:

1. Perform each visual and mechanical inspection and electrical test stated in NETA Acceptance Testing Specification. Certify compliance with test parameters.
2. Correct malfunctioning units on-site, where possible, and retest to demonstrate compliance; otherwise, replace with new units and retest.

C. Acceptance Testing Preparation:

1. Test continuity of each circuit.

D. Lighting control panel will be considered defective if it does not pass tests and inspections.

E. Prepare test and inspection reports, including a certified report that identifies lighting control panels and describes scanning results. Include notation of deficiencies detected, remedial action taken, and observations made after remedial action.

3.6 STARTUP SERVICE

A. Engage a factory-authorized service representative to **perform** startup service.

1. Complete installation and startup checks according to manufacturer's written instructions.
2. Confirm correct communications wiring, initiate communications between panels, and program the lighting control system according to approved configuration schedules, time-of-day schedules, and input override assignments.

3.7 ADJUSTING

A. Occupancy Adjustments: When requested within 12 months from date of Substantial Completion, provide on-site assistance in adjusting system to suit actual occupied conditions. Provide up to two visits to Project during other-than-normal occupancy hours for this purpose.

3.8 DEMONSTRATION

A. Engage a factory-authorized service representative to train Owner's maintenance personnel to adjust, operate, and maintain the control unit and operator interface.

END OF SECTION 260943.23

SECTION 262416 - PANELBOARDS

PART 1 - GENERAL

1.1 SUMMARY

A. Section Includes:

1. Distribution panelboards.
2. Lighting and appliance branch-circuit panelboards.

1.2 DEFINITIONS

A. MCCB: Molded-case circuit breaker.

B. SPD: Surge protective device.

1.3 ACTION SUBMITTALS

A. Product Data: For each type of panelboard.

B. Shop Drawings: For each panelboard and related equipment.

1. Include dimensioned plans, elevations, sections, and details.
2. Detail enclosure types including mounting and anchorage, environmental protection, knockouts, corner treatments, covers and doors, gaskets, hinges, and locks.
3. Detail bus configuration, current, and voltage ratings.
4. Short-circuit current rating of panelboards and overcurrent protective devices.
5. Include evidence of NRTL listing for series rating of installed devices.
6. Include evidence of NRTL listing for SPD as installed in panelboard.
7. Detail features, characteristics, ratings, and factory settings of individual overcurrent protective devices and auxiliary components.
8. Include wiring diagrams for power, signal, and control wiring.
9. Key interlock scheme drawing and sequence of operations.
10. Include time-current coordination curves for each type and rating of overcurrent protective device included in panelboards.

1.4 INFORMATIONAL SUBMITTALS

A. Panelboard schedules for installation in panelboards.

1.5 CLOSEOUT SUBMITTALS

A. Operation and maintenance data.

1.6 FIELD CONDITIONS

A. Service Conditions: NEMA PB 1, usual service conditions, as follows:

1. Ambient temperatures within limits specified.
2. Altitude not exceeding 6600 feet.

1.7 WARRANTY

A. Manufacturer's Warranty: Manufacturer agrees to repair or replace panelboards that fail in materials or workmanship within specified warranty period.

1. Panelboard Warranty Period: 24 months from date of Substantial Completion.

PART 2 - PRODUCTS

2.1 PANELBOARDS COMMON REQUIREMENTS

A. Fabricate and test panelboards according to IEEE 344 to withstand seismic forces defined in Section 260548.16 "Seismic Controls for Electrical Systems."

B. Electrical Components, Devices, and Accessories: Listed and labeled as defined in NFPA 70, by a qualified testing agency, and marked for intended location and application.

C. Comply with NEMA PB 1.

D. Comply with NFPA 70.

E. Enclosures: Flush mounted, dead-front cabinets.

1. Rated for environmental conditions at installed location.

a. Indoor Dry and Clean Locations: NEMA 250, Type 1.
b. Outdoor Locations: NEMA 250, Type 3R.
c. Other Wet or Damp Indoor Locations: NEMA 250, Type 4.
d. Indoor Locations Subject to Dust, Falling Dirt, and Dripping Noncorrosive Liquids: NEMA 250, Type 5.

2. Height: 84 inches maximum.
3. Front: Secured to box with concealed trim clamps. For surface-mounted fronts, match box dimensions; for flush-mounted fronts, overlap box. Trims shall cover all live parts and shall have no exposed hardware.
4. Hinged Front Cover: Entire front trim hinged to box and with standard door within hinged trim cover. Trims shall cover all live parts and shall have no exposed hardware.

F. Incoming Mains Location: Convertible between top and bottom.

G. Phase, Neutral, and Ground Buses: Hard-drawn copper, 98 percent conductivity.

H. Conductor Connectors: Suitable for use with conductor material and sizes.

1. Material: Hard-drawn copper, 98 percent conductivity.
2. Main and Neutral Lugs: Mechanical type, with a lug on the neutral bar for each pole in the panelboard.
3. Ground Lugs and Bus-Configured Terminators: Mechanical type, with a lug on the bar for each pole in the panelboard.
4. Feed-Through Lugs: Mechanical type, suitable for use with conductor material. Locate at opposite end of bus from incoming lugs or main device.
5. Subfeed (Double) Lugs: Mechanical type suitable for use with conductor material. Locate at same end of bus as incoming lugs or main device.

I. NRTL Label: Panelboards shall be labeled by an NRTL acceptable to authority having jurisdiction for use as service equipment with one or more main service disconnecting and overcurrent protective devices. Panelboards shall have meter enclosures, wiring, connections, and other provisions for utility metering. Coordinate with utility company for exact requirements.

J. Future Devices: Panelboards shall have mounting brackets, bus connections, filler plates, and necessary appurtenances required for future installation of devices.

K. Panelboard Short-Circuit Current Rating: Rated for series-connected system with integral or remote upstream overcurrent protective devices and labeled by an NRTL. Include label or manual with size and type of allowable upstream and

branch devices listed and labeled by an NRTL for series-connected short-circuit rating.

L. Panelboard Short-Circuit Current Rating: Fully rated to interrupt symmetrical short-circuit current available at terminals. Assembly listed by an NRTL for 100 percent interrupting capacity.

2.2 PERFORMANCE REQUIREMENTS

A. Seismic Performance: Panelboards shall withstand the effects of earthquake motions determined according to ASCE/SEI 7

1. The term "withstand" means "the unit will remain in place without separation of any parts from the device when subjected to the seismic forces specified."

2.3 POWER PANELBOARDS

A. Panelboards: NEMA PB 1, distribution type.

B. Doors: Secured with vault-type latch with tumbler lock; keyed alike.

1. For doors more than 36 inches high, provide two latches, keyed alike.

C. Mains: Circuit breaker.

D. Branch Overcurrent Protective Devices for Circuit-Breaker Frame Sizes 125 A and Smaller: Plug-in circuit breakers or Bolt-on circuit breakers or Plug-in circuit breakers where individual positive-locking device requires mechanical release for removal.

E. Branch Overcurrent Protective Devices for Circuit-Breaker Frame Sizes Larger Than 125 A: Bolt-on circuit breakers or Plug-in circuit breakers where individual positive-locking device requires mechanical release for removal.

F. Branch Overcurrent Protective Devices: Fused switches.

G. Contactors in Main Bus: NEMA ICS 2, Class A, electrically held, general-purpose controller, with same short-circuit interrupting rating as panelboard.

1. External Control-Power Source: 24-V control circuit.

2.4 LIGHTING AND APPLIANCE BRANCH-CIRCUIT PANELBOARDS

A. Panelboards: NEMA PB 1, lighting and appliance branch-circuit type.

B. Mains: Circuit breaker.

C. Branch Overcurrent Protective Devices: Plug-in or Bolt-on circuit breakers, replaceable without disturbing adjacent units.

D. Contactors in Main Bus: NEMA ICS 2, Class A, electricallyheld, general-purpose controller, with same short-circuit interrupting rating as panelboard.

1. External Control-Power Source: 24-V control circuit.

E. Doors: Concealed hinges; secured with flush latch with tumbler lock; keyed alike.

F. Column-Type Panelboards: Single row of overcurrent devices with narrow gutter extension and overhead junction box equipped with ground and neutral terminal buses.

2.5 DISCONNECTING AND OVERCURRENT PROTECTIVE DEVICES

A. MCCB: Comply with UL 489, with series-connected rating to meet available fault currents.

1. Thermal-Magnetic Circuit Breakers:

a. Inverse time-current element for low-level overloads.
b. Instantaneous magnetic trip element for short circuits.
c. Adjustable magnetic trip setting for circuit-breaker frame sizes 250 A and larger.

2. Adjustable Instantaneous-Trip Circuit Breakers: Magnetic trip element with front-mounted, field-adjustable trip setting.
3. Electronic Trip Circuit Breakers:

a. RMS sensing.
b. Field-replaceable rating plug or electronic trip.
c. Digital display of settings, trip targets, and indicated metering displays.
d. Multi-button keypad to access programmable functions and monitored data.
e. Ten-event, trip-history log. Each trip event shall be recorded with type, phase, and magnitude of fault that caused the trip.

f. Integral test jack for connection to portable test set or laptop computer.
g. Field-Adjustable Settings:

1) Instantaneous trip.
2) Long- and short-time pickup levels.
3) Long and short time adjustments.
4) Ground-fault pickup level, time delay, and I squared T response.

4. Current-Limiting Circuit Breakers: Frame sizes 400 A and smaller; let-through ratings less than NEMA FU 1, RK-5.
5. GFCI Circuit Breakers: Single- and double-pole configurations with Class A ground-fault protection (6-mA trip).
6. GFEP Circuit Breakers: Class B ground-fault protection (30-mA trip).
7. Arc-Fault Circuit Interrupter Circuit Breakers: Comply with UL 1699; 120/240-V, single-pole configuration.
8. Subfeed Circuit Breakers: Vertically mounted.
9. MCCB Features and Accessories:

a. Standard frame sizes, trip ratings, and number of poles.
b. Breaker handle indicates tripped status.
c. UL listed for reverse connection without restrictive line or load ratings.
d. Lugs: Mechanical style, suitable for number, size, trip ratings, and conductor materials.
e. Application Listing: Appropriate for application; Type SWD for switching fluorescent lighting loads; Type HID for feeding fluorescent and HID lighting circuits.
f. Ground-Fault Protection: Integrally mounted relay and trip unit with adjustable pickup and time-delay settings, push-to-test feature, and ground-fault indicator.
g. Shunt Trip: 120-V trip coil energized from separate circuit, set to trip at 75 percent of rated voltage.
h. Handle Padlocking Device: Fixed attachment, for locking circuit-breaker handle in on or off position.
i. Handle Clamp: Loose attachment, for holding circuit-breaker handle in on position.

2.6 IDENTIFICATION

A. Panelboard Label: Manufacturer's name and trademark, voltage, amperage, number of phases, and number of poles shall be located on the interior of the panelboard door.

B. Breaker Labels: Faceplate shall list current rating, UL and IEC certification standards, and AIC rating.

C. Circuit Directory: Directory card inside panelboard door, mounted in metal frame with transparent protective cover.

2.7 ACCESSORY COMPONENTS AND FEATURES

A. Portable Test Set: For testing functions of solid-state trip devices without removing from panelboard. Include relay and meter test plugs suitable for testing panelboard meters and switchboard class relays.

PART 3 - EXECUTION

3.1 INSTALLATION

A. Comply with NECA 1.

B. Install panelboards and accessories according to NEMA PB 1.1.

C. Comply with mounting and anchoring requirements specified in Section 260548.16 "Seismic Controls for Electrical Systems."

D. Mount top of trim 90 inches max. above finished floor unless otherwise indicated.

E. Mount panelboard cabinet plumb and rigid without distortion of box.

F. Mount recessed panelboards with fronts uniformly flush with wall finish and mating with back box.

G. Install overcurrent protective devices and controllers not already factory installed.

1. Set field-adjustable, circuit-breaker trip ranges.

H. Make grounding connections and bond neutral for services and separately derived systems to ground. Make connections to grounding electrodes, separate grounds for isolated ground bars, and connections to separate ground bars.

I. Install filler plates in unused spaces.

J. Stub four 1-inch empty conduits from panelboard into accessible ceiling space or space designated to be ceiling space in the future. Stub four 1-inch empty conduits into raised floor space or below slab not on grade.

K. Arrange conductors in gutters into groups and bundle and wrap with wire ties.

3.2 IDENTIFICATION

A. Identify field-installed conductors, interconnecting wiring, and components; install warning signs complying with requirements in Section 260553 "Identification for Electrical Systems."

B. Create a directory to indicate installed circuit loads; incorporate Owner's final room designations. Obtain approval before installing. Handwritten directories are not acceptable. Install directory inside panelboard door.

C. Panelboard Nameplates: Label each panelboard with a nameplate complying with requirements for identification specified in Section 260553 "Identification for Electrical Systems."

D. Device Nameplates: Label each branch circuit device in power panelboards with a nameplate complying with requirements for identification specified in Section 260553 "Identification for Electrical Systems."

E. Install warning signs complying with requirements in Section 260553 "Identification for Electrical Systems" identifying source of remote circuit.

3.3 FIELD QUALITY CONTROL

A. Perform tests and inspections.

B. Acceptance Testing Preparation:

1. Test insulation resistance for each panelboard bus, component, connecting supply, feeder, and control circuit.
2. Test continuity of each circuit.

C. Tests and Inspections:

1. Perform each visual and mechanical inspection and electrical test for low-voltage air circuit breakers stated in NETA Acceptance Testing Specification. Certify compliance with test parameters.
2. Correct malfunctioning units on-site, where possible, and retest to demonstrate compliance; otherwise, replace with new units and retest.

D. Panelboards will be considered defective if they do not pass tests and inspections.

E. Prepare test and inspection reports, including a certified report that identifies panelboards included and that describes scanning results, with comparisons of the two scans. Include notation of deficiencies detected, remedial action taken, and observations after remedial action.

END OF SECTION 262416

SECTION 262713 - ELECTRICITY METERING

PART 1 - GENERAL

1.1 SUMMARY

A. Section includes equipment for metering by SCE.

1.2 ACTION SUBMITTALS

A. Product Data: For each type of product indicated.

B. Shop Drawings: Dimensioned plans and sections or elevation layouts and wiring diagrams.

1.3 INFORMATIONAL SUBMITTALS

A. Field quality-control reports.

1.4 CLOSEOUT SUBMITTALS

A. Operation and Maintenance Data shall include the following:

1. Application and operating software documentation.
2. Software licenses.
3. Software service agreement.
4. Hard copies of manufacturer's operating specifications, design user's guides for software and hardware, and PDF files on CD-ROM of the hard-copy Submittal.

1.5 QUALITY ASSURANCE

A. Electrical Components, Devices, and Accessories: Listed and labeled as defined in NFPA 70, by a qualified testing agency, and marked for intended location and application.

1.6 SOFTWARE SERVICE AGREEMENT

A. Technical Support: Beginning with Substantial Completion, provide software support for 2 years.

B. Upgrade Service: Update software to latest version at Project completion. Install and program software upgrades that become available within 2 years from date of Substantial Completion. Upgrading software shall include operating system. Upgrade shall include new or revised licenses for use of software.

1. Provide 30 days' notice to Owner to allow scheduling and access to system and to allow Owner to upgrade his computer equipment if necessary.

PART 2 - PRODUCTS

2.1 EQUIPMENT FOR ELECTRICITY METERING BY UTILITY COMPANY

A. Meters will be furnished by utility company.

B. Current-Transformer Cabinets: Comply with requirements of electrical-power utility company.

C. Meter Sockets: Comply with requirements of electrical-power utility company.

D. Meter Sockets: Steady-state and short-circuit current ratings shall meet indicated circuit ratings.

E. Modular Meter Center: Factory-coordinated assembly of a main service terminal box with lugs only, wireways, tenant meter socket modules, and tenant feeder circuit breakers arranged in adjacent vertical sections. Assembly shall be complete with interconnecting buses and other features as specified below.

1. Products by Myers Power Products, Pacific Utility Products, or equal.
2. Comply with requirements of utility company for meter center.
3. Housing: EUSERC Compliant, NEMA 250, Type 3R enclosure.
4. Minimum Short-Circuit Rating: 42,000 manufacturer listed/tested series rated per service planner fault current report. Asymmetrical at rated voltage.
5. Main Disconnect Device: Circuit breaker, series-combination rated for use with downstream feeder and branch circuit breakers.
6. Main Disconnect Device: Fusible switch, series-combination rated by circuit-breaker manufacturer to protect downstream feeder and branch circuit breakers.
7. Tenant Feeder Circuit Breakers: Series-combination-rated molded-case units, rated to protect circuit breakers in downstream tenant and to house loadcenters and panelboards that have 10,000-A interrupting capacity.

a. Identification: Complying with requirements in Section 260553 "Identification for Electrical Systems" with legend identifying tenant's address.
b. Physical Protection: Tamper resistant, with hasp for padlock.

8. Meter Socket: Rating coordinated with indicated tenant feeder circuit rating.

2.2 EQUIPMENT FOR ELECTRICITY METERING BY OWNER

1. Products by Myers Power Products, Pacific Utility Products, or equal.

B. General Requirements for Owner's Meters:

1. Comply with UL 1244.
2. Meters used for billing shall have an accuracy of 0.5 percent of reading, complying with requirements in ANSI C12.20.
3. Meters shall be certified by Euserc compliant as complying with SCE standards.
4. Enclosure: NEMA 250, Type 3R minimum, with hasp for padlocking or sealing.
5. Identification: Comply with requirements in Section 260553 "Identification for Electrical Systems."
6. Memory Backup: Self-contained to maintain memory throughout power outages of 72 hours, minimum.
7. Sensors: Current-sensing type, with current or voltage output, selected for optimum range and accuracy for meters indicated for this application.

a. Type: split or solid core.

8. Current-Transformer Cabinet: Listed or recommended by metering equipment manufacturer for use with sensors indicated.

C. Kilowatt-hour Meter: Electronic single-phase meters, measuring electricity used.

1. Voltage and Phase Configuration: Meter shall be designed for use on circuits with voltage rating and phase configuration indicated for its application.
2. Display: LCD with characters not less than 0.25 inch (6 mm) high, indicating accumulative kilowatt-hours and current kilowatt load. Retain accumulated kilowatt-hour in a nonvolatile memory, until reset.
3. Display: Digital electromechanical counter, indicating accumulative kilowatt-hours.

D. Kilowatt-hour/Demand Meter: Electronic single-phase meters, measuring electricity use and demand. Demand shall be integrated over a 15-minute interval.

1. Voltage and Phase Configuration: Meter shall be designed for use on circuits with voltage rating and phase configuration indicated for its application.
2. Display: LCD with characters not less than 0.25 inch (6 mm) high, indicating accumulative kilowatt-hours, current time and date, current demand, and historic peak demand, and time and date of historic peak demand. Retain accumulated kilowatt-hour and historic peak demand in a nonvolatile memory, until reset.

E. Data Transmission Cable: Transmit KY pulse data over Class 1 control-circuit conductors in raceway. Comply with Section 260523 "Control-Voltage Electrical Power Cables."

F. Software: PC based, a product of meter manufacturer, suitable for calculation of utility cost allocation and billing.

1. Utility Cost Allocation: Automatically import energy-usage records to allocate energy costs for the following:

   a. At least [1] one tenant/owner.

2. Tenant or Activity Billing Software: Automatically import energy-usage records to automatically compute and prepare tenant bills, activity demand and energy-use statements based on metering of energy use and peak demand. Maintain separate directory for each tenant's historical billing information. Prepare summary reports in user-defined formats and time intervals.

PART 3 - EXECUTION

3.1 INSTALLATION

A. Comply with equipment installation requirements in NECA 1.

B. Install meters furnished by utility company. Install raceways and equipment according to utility company's written requirements. Provide empty conduits for metering leads and extend grounding connections as required by utility company.

C. Install modular meter center according to NECA 400 switchboard installation requirements.

D. Comply with requirements for identification specified in Section 260553 "Identification for Electrical Systems."

1. Series Combination Warning Label: Self-adhesive type, with text as required by NFPA 70.
2. Equipment Identification Labels: Adhesive film labels with clear protective overlay.

3.2 FIELD QUALITY CONTROL

A. Perform tests and inspections.

B. Tests and Inspections:

1. Connect a load of known kilowatt rating, 2 kW minimum, to a circuit supplied by metered feeder.
2. Turn off circuits supplied by metered feeder and secure them in off condition.
3. Run test load continuously for two hours minimum, or longer, to obtain a measurable meter indication. Use test-load placement and setting that ensures continuous, safe operation.
4. Check and record meter reading at end of test period and compare with actual electricity used, based on test-load rating, duration of test, and sample measurements of supply voltage at test-load connection. Record test results.

C. Electricity metering will be considered defective if it does not pass tests and inspections.

D. Prepare test and inspection reports.

END OF SECTION 262713

SECTION 262726 - WIRING DEVICES

PART 1 - GENERAL

1.1 SUMMARY

A. Section Includes:

1. Receptacles, receptacles with integral GFCI, and associated device plates.
2. Weather-resistant receptacles.
3. Snap switches and wall-box dimmers.
4. Solid-state fan speed controls.
5. Wall-switch and exterior occupancy sensors.
6. Communications outlets.

1.2 ADMINISTRATIVE REQUIREMENTS

A. Coordination:

1. Receptacles for Owner-Furnished Equipment: Match plug configurations.

1.3 ACTION SUBMITTALS

A. Product Data: For each type of product.

B. Shop Drawings: List of legends and description of materials and process used for premarking wall plates.

1.4 INFORMATIONAL SUBMITTALS

A. Field quality-control reports.

1.5 CLOSEOUT SUBMITTALS

A. Operation and maintenance data.

PART 2 - PRODUCTS

2.1 MANUFACTURERS

A. Eaton, Hubbell, Leviton, or approved equal.
B. Source Limitations: Obtain each type of wiring device and associated wall plate from single source from single manufacturer.

2.2 GENERAL WIRING-DEVICE REQUIREMENTS

A. Wiring Devices, Components, and Accessories: Listed and labeled as defined in NFPA 70, by a qualified testing agency, and marked for intended location and application.

B. Comply with NFPA 70.

C. Devices that are manufactured for use with modular plug-in connectors may be substituted under the following conditions:

1. Connectors shall comply with UL 2459 and shall be made with stranding building wire.
2. Devices shall comply with the requirements in this Section.

2.3 STRAIGHT-BLADE RECEPTACLES

A. Convenience Receptacles, 125 V, 20 A: Comply with NEMA WD 1, NEMA WD 6 Configuration 5-20R, UL 498, and FS W-C-596.
B. Eaton, Hubbell, Leviton, or approved equal.

2.4 GFCI RECEPTACLES

A. General Description:

1. Straight blade, feed-through type.
2. Comply with NEMA WD 1, NEMA WD 6, UL 498, UL 943 Class A, and FS W-C-596.
3. Include indicator light that shows when the GFCI has malfunctioned and no longer provides proper GFCI protection.

B. Duplex GFCI Convenience Receptacles, 125 V, 20 A: Eaton, Hubbell, Leviton, or approved equal.

2.5 TOGGLE SWITCHES

A. Comply with NEMA WD 1, UL 20, and FS W-S-896.

B. Switches, 120/277 V, 20 A:
   1. Single Pole: Eaton, Hubbell, Leviton, or approved equal.
   2. Two Pole: Eaton, Hubbell, Leviton, or approved equal.
   3. Three Way: Eaton, Hubbell, Leviton, or approved equal.
   4. Four Way: Eaton, Hubbell, Leviton, or approved equal.

C. Key-Operated Switches, 120/277 V, 20 A:
   1. Eaton, Hubbell, Leviton, or approved equal.
   2. Description: Single pole, with factory-supplied key in lieu of switch handle.

2.6 DECORATOR-STYLE DEVICES

A. Convenience Receptacles: Square face, 125 V, 15 A; comply with NEMA WD 1, NEMA WD 6 Configuration 5-15R, and UL 498.
   1. Three Way: Eaton, Hubbell, Leviton, or approved equal.

B. GFCI, Feed-Through Type, Convenience Receptacles: Square face, 125 V, 15 A; comply with NEMA WD 1, NEMA WD 6 Configuration 5-15R, UL 498, and UL 943 Class A.
   1. Three Way: Eaton, Hubbell, Leviton, or approved equal.

C. Toggle Switches, Square Face, 120/277 V, 15 A: Comply with NEMA WD 1, UL 20, and FS W-S-896.
   1. Three Way: Eaton, Hubbell, Leviton, or approved equal.

D. Lighted Toggle Switches, Square Face, 120 V, 15 A: Comply with NEMA WD 1 and UL 20.
   1. Three Way: Eaton, Hubbell, Leviton, or approved equal.
   2. Description: With neon-lighted handle, illuminated when switch is "off."

2.7 FINISHES

A. Device Color:

   1. Wiring Devices Connected to Normal Power System: As selected by Landscape Architect unless otherwise indicated or required by NFPA 70 or device listing.
   2. Wiring Devices Connected to Emergency Power System: Red.

3. TVSS Devices: Blue.

B. Wall Plate Color: For plastic covers, match device color.

PART 3 - EXECUTION

3.1 INSTALLATION

A. Comply with NECA 1, including mounting heights listed in that standard, unless otherwise indicated.

B. Coordination with Other Trades:

1. Protect installed devices and their boxes. Do not place wall finish materials over device boxes and do not cut holes for boxes with routers that are guided by riding against outside of boxes.
2. Keep outlet boxes free of plaster, drywall joint compound, mortar, cement, concrete, dust, paint, and other material that may contaminate the raceway system, conductors, and cables.
3. Install device boxes in brick or block walls so that the cover plate does not cross a joint unless the joint is troweled flush with the face of the wall.
4. Install wiring devices after all wall preparation, including painting, is complete.

C. Conductors:

1. Do not strip insulation from conductors until right before they are spliced or terminated on devices.
2. Strip insulation evenly around the conductor using tools designed for the purpose. Avoid scoring or nicking of solid wire or cutting strands from stranded wire.
3. The length of free conductors at outlets for devices shall meet provisions of NFPA 70, Article 300, without pigtails.
4. Existing Conductors:

   a. Cut back and pigtail, or replace all damaged conductors.
   b. Straighten conductors that remain and remove corrosion and foreign matter.
   c. Pigtailing existing conductors is permitted, provided the outlet box is large enough.

D. Device Installation:

1. Replace devices that have been in temporary use during construction and that were installed before building finishing operations were complete.
2. Keep each wiring device in its package or otherwise protected until it is time to connect conductors.
3. Do not remove surface protection, such as plastic film and smudge covers, until the last possible moment.
4. Connect devices to branch circuits using pigtails that are not less than 6 inches in length.
5. When there is a choice, use side wiring with binding-head screw terminals. Wrap solid conductor tightly clockwise, two-thirds to three-fourths of the way around terminal screw.
6. Use a torque screwdriver when a torque is recommended or required by manufacturer.
7. When conductors larger than No. 12 AWG are installed on 15- or 20-A circuits, splice No. 12 AWG pigtails for device connections.
8. Tighten unused terminal screws on the device.
9. When mounting into metal boxes, remove the fiber or plastic washers used to hold device-mounting screws in yokes, allowing metal-to-metal contact.

E. Receptacle Orientation:

1. Install ground pin of vertically mounted receptacles down, and on horizontally mounted receptacles to the right.

F. Device Plates: Do not use oversized or extra-deep plates. Repair wall finishes and remount outlet boxes when standard device plates do not fit flush or do not cover rough wall opening.

G. Dimmers:

1. Install dimmers within terms of their listing.
2. Verify that dimmers used for fan speed control are listed for that application.
3. Install unshared neutral conductors on line and load side of dimmers according to manufacturers' device listing conditions in the written instructions.

H. Arrangement of Devices: Unless otherwise indicated, mount flush, with long dimension vertical and with grounding terminal of receptacles on top. Group adjacent switches under single, multigang wall plates.

I. Adjust locations of service poles to suit arrangement of partitions and furnishings.

3.2 GFCI RECEPTACLES

A. Install non-feed-through-type GFCI receptacles where protection of downstream receptacles is not required.

3.3 FIELD QUALITY CONTROL

A. Perform the following tests and inspections:

1. Test Instruments: Use instruments that comply with UL 1436.
2. Test Instrument for Convenience Receptacles: Digital wiring analyzer with digital readout or illuminated digital-display indicators of measurement.

B. Tests for Convenience Receptacles:

1. Line Voltage: Acceptable range is 105 to 132 V.
2. Percent Voltage Drop under 15-A Load: A value of 6 percent or higher is unacceptable.
3. Ground Impedance: Values of up to 2 ohms are acceptable.
4. GFCI Trip: Test for tripping values specified in UL 1436 and UL 943.
5. Using the test plug, verify that the device and its outlet box are securely mounted.
6. Tests shall be diagnostic, indicating damaged conductors, high resistance at the circuit breaker, poor connections, inadequate fault current path, defective devices, or similar problems. Correct circuit conditions, remove malfunctioning units and replace with new ones, and retest as specified above.

C. Wiring device will be considered defective if it does not pass tests and inspections.

D. Prepare test and inspection reports.

END OF SECTION 262726

SECTION 265613 - LIGHTING POLES AND STANDARDS

PART 1 - GENERAL

1.1 SUMMARY

A. Section Includes:

1. Poles and accessories for support of luminaires.
2. Luminaire-lowering devices.

1.2 DEFINITIONS

A. EPA: Equivalent projected area.

B. Luminaire: Complete lighting fixture.

C. Pole: LED Exterior Light Fixture-supporting structure, including tower used for large-area illumination.

D. Standard: See See Fixture Schedule for model # and description.

1.3 ACTION SUBMITTALS

A. Product Data: For each pole, accessory, and luminaire-supporting and -lowering device.

B. Shop Drawings:

1. Include plans, elevations, sections, and mounting and attachment details.
2. Include details of equipment assemblies. Indicate dimensions, weights, loads, required clearances, method of field assembly, components, and location and size of each field connection.
3. Detail fabrication and assembly of poles and pole accessories.
4. Foundation construction details, including material descriptions, dimensions, anchor bolts, support devices, and calculations, signed and sealed by a professional engineer licensed in the state of installation.
5. Anchor bolt templates keyed to specific poles and certified by manufacturer.
6. Method and procedure of pole installation. Include manufacturer's written installations.

1.4 INFORMATIONAL SUBMITTALS

A. Pole and Support Component Certificates: Signed by manufacturers of poles, certifying that products are designed for indicated load requirements according to AASHTO LTS-6-M and that load imposed by luminaire and attachments has been included in design. The certification shall be based on design calculations signed and sealed by a professional engineer.

B. Seismic Qualification Certificates: For Luminaires**,** accessories, and components, from manufacturer.

C. Material test reports.

D. Field quality-control reports.

E. Sample warranty.

F. Soil test reports.

1.5 CLOSEOUT SUBMITTALS

A. Operation and maintenance data for pole-lowering devices and pole-mounted accessories.

1.6 WARRANTY

A. Special Warranty: Manufacturer agrees to repair or replace components of pole(s) and any luminaire-lowering device(s) that fail in materials or workmanship; that corrode; or that fade, stain, perforate, erode, or chalk due to effects of weather or solar radiation within a specified warranty period. Manufacturer may exclude lightning damage, hail damage, vandalism, abuse, or unauthorized repairs from special warranty period.

1. Warranty Period: Ten years from date of Substantial Completion.

PART 2 - PRODUCTS

2.1 PERFORMANCE REQUIREMENTS

A. Delegated Design: Engage a qualified professional Structural engineer to design pole foundation and pole power system.

B. Seismic Performance: Foundation and pole shall withstand the effects of earthquake motions determined according to ASCE/SEI 7.

1. The term "withstand" means "the system will remain in place without separation of any parts when subjected to the seismic forces specified[and the system will be fully operational after the seismic event]."
2. Component Importance Factor: 1.5.

C. Structural Characteristics: Comply with AASHTO LTS-6-M.

D. Dead Load: Weight of luminaire and its horizontal and vertical supports, lowering devices, and supporting structure, applied according to AASHTO LTS-6-M.

E. Live Load: Single load of 500 lbf distributed according to AASHTO LTS-6-M.

F. Ice Load: Load of 3 lbf/sq. ft., applied according to AASHTO LTS-6-M for applicable areas on the Ice Load Map.

G. Wind Load: Pressure of wind on pole and luminaire, calculated and applied according to AASHTO LTS-6-M.

1. Basic wind speed for calculating wind load for poles exceeding 50 feet in height is 100 mph see structural.

   a. Wind Importance Factor: [1.0] – see structural.
   b. Minimum Design Life: [50 years].
   c. Velocity Conversion Factor: [1.0] see structural.

2. Basic wind speed for calculating wind load for poles 50 feet is 90 mph or less – see structural.

   a. Wind Importance Factor: [1.0] – see structural.
   b. Minimum Design Life: [50 years].
   c. Velocity Conversion Factor: [1.0] see structural.

H. Strength Analysis: For each pole, multiply the actual EPA of luminaires and brackets by a factor of (see structural) to obtain the EPA to be used in pole selection strength analysis.

I. Luminaire Attachment Provisions: Comply with luminaire manufacturers' mounting requirements. Use stainless-steel fasteners and mounting bolts unless otherwise indicated.

2.2 STEEL POLES

A. Source Limitations: Obtain poles from single manufacturer or producer compatible with luminaire tenon mounting without adapters or brackets other than those produced and supplied by luminaire manufacturer.

B. Source Limitations: For poles, obtain each color, grade, finish, type, and variety of pole from single source with resources to provide products of consistent quality in appearance and physical properties.

C. Poles: Comply with ASTM A 500/A 500M, Grade B carbon steel with a minimum yield of 46,000 psig ; one-piece construction up to 40 feet in height with access handhole in pole wall.

1. Shape: Round, straight, stepped.
2. Mounting Provisions: Butt flange for bolted mounting on foundation or breakaway support.

D. Brackets for Luminaires: Detachable, cantilever, without underbrace.

1. Adaptor fitting welded to pole, allowing the bracket to be bolted to the pole-mounted adapter, then bolted together with stainless-steel bolts.
2. Cross Section: Tapered oval, with straight tubular end section to accommodate luminaire. Match pole material and finish.

E. Pole-Top Tenons: Fabricated to support luminaire or luminaires and brackets indicated, and securely fastened to pole top.

F. Fasteners: Stainless steel, vandal-resistant, size and type as determined by manufacturer. Corrosion-resistant items compatible with support components.

1. Materials: Compatible with poles and standards as well as the substrates to which poles and standards are fastened and shall not cause galvanic action at contact points.
2. Anchor Bolts, Leveling Nuts, Bolt Caps, and Washers: Hot-dip galvanized after fabrication unless otherwise indicated.

G. Grounding and Bonding Lugs: Welded 1/2-inch threaded lug, complying with requirements in Section 260526 "Grounding and Bonding for Electrical Systems," listed for attaching grounding and bonding conductors of type and size indicated, and accessible through handhole.

H. Handhole: Oval shaped, with minimum clear opening of 2-1/2 by 5 inches, with cover secured by vandal resistant, stainless-steel captive screws.

I. Intermediate Handhole and Cable Support: Weatherproof, 3-by-5-inch handhole located at midpoint of pole, with cover for access to internal welded attachment lug for electric cable support grip.

J. Cable Support Grip: Wire-mesh type with rotating attachment eye, sized for diameter of cable and rated for a minimum load equal to weight of supported load multiplied by a 5.0 safety factor.

K. Prime-Coat Finish: Manufacturer's standard prime-coat finish ready for field painting.

L. Galvanized Finish: After fabrication, hot-dip galvanize according to ASTM A 123/A 123M.

M. Factory-Painted Finish: Comply with NAAMM's "Metal Finishes Manual for Architectural and Metal Products" recommendations for applying and designating finishes.

1. Surface Preparation: Clean surfaces according to SSPC-SP 1 to remove dirt, oil, grease, and other contaminants that could impair paint bond. Grind welds and polish surfaces to a smooth, even finish. Remove mill scale and rust, if present, from uncoated steel, according to SSPC-SP 5/NACE No. 1 or SSPC-SP 8.
2. Interior Surfaces of Pole: One coat of bituminous paint, or otherwise treat for equal corrosion protection.
3. Exterior Surfaces: Manufacturer's standard finish consisting of one or more coats of primer and two finish coats of high gloss, high-build polyurethane enamel.

    a. Color: Match Landscape Architect's sample RAL number, typical for all.

N. Powder-Coat Finish: Comply with NAAMM's "Metal Finishes Manual for Architectural and Metal Products" recommendations for applying and designating finishes.

1. Surface Preparation: Clean surfaces according to SSPC-SP 1 to remove dirt, oil, grease, and other contaminants that could impair powder coat bond. Grind welds and polish surfaces to a smooth, even finish. Remove mill scale and rust, if present, from uncoated steel, according to SSPC-SP 5/NACE No. 1 or SSPC-SP 8.
2. Powder Coat: Comply with AAMA 2604.

a. Electrostatic-applied powder coating; single application and cured to a minimum 2.5- to 3.5-mils dry film thickness. Coat interior and exterior of pole for equal corrosion protection.
b. Color: Match Landscape Architect's sample RAL number, typical for all.

2.3 ALUMINUM POLES

A. Poles: Seamless, extruded structural tube complying with ASTM B 221, Alloy 6063-T6, with access handhole in pole wall.

B. Poles: Seamless, extruded structural tube complying with ASTM B 221, Alloy 6061-T6, with access handhole in in pole wall.

1. Shape: Round, straight, stepped.
2. Mounting Provisions: Butt flange for bolted mounting on foundation or breakaway support.

C. Pole-Top Tenons: Fabricated to support luminaire or luminaires and brackets indicated, and securely fastened to pole top.

D. Grounding and Bonding Lugs: Bolted 1/2-inch threaded lug, complying with requirements in Section 260526 "Grounding and Bonding for Electrical Systems," listed for attaching grounding and bonding conductors of type and size listed in that Section, and accessible through handhole.

E. Fasteners: Stainless steel size and type as determined by manufacturer. Corrosion-resistant items compatible with support components.

1. Materials: Compatible with poles and standards as well as to substrates to which poles and standards are fastened and shall not cause galvanic action at contact points.
2. Anchor Bolts, Leveling Nuts, Bolt Caps, and Washers: Hot-dip galvanized after fabrication unless otherwise indicated.

F. Handhole: Oval shaped, with minimum clear opening of 2-1/2 by 5 inches, with cover secured by stainless-steel captive screws.

G. Prime-Coat Finish: Manufacturer's standard prime-coat finish ready for field painting.

H. Aluminum Finish: Comply with NAAMM's "Metal Finishes Manual for Architectural and Metal Products" recommendations for applying and designating finishes.

1. Finish designations prefixed by AA comply with the system established by the Aluminum Association for designating aluminum finishes.
2. Natural Satin Finish: Provide fine, directional, medium satin polish (AA-M32); buff complying with AA-M20 requirements; and seal aluminum surfaces with clear, hard-coat wax.
3. Class I, Clear-Anodic Finish: AA-M32C22A41 (Mechanical Finish: Medium satin; Chemical Finish: Etched, medium matte; Anodic Coating: Architectural Class I clear coating of 0.018 mm or thicker), complying with AAMA 611.
4. Class I, Color-Anodic Finish: AA-M32C22A42/A44 (Mechanical Finish: Medium; Chemical Finish: Etched, medium matte; Anodic Coating: Architectural Class I integrally colored or electrolytically deposited color coating 0.018 mm or thicker), complying with AAMA 611.

I. Factory-Painted Finish: Comply with NAAMM's "Metal Finishes Manual for Architectural and Metal Products" recommendations for applying and designating finishes.

1. Surface Preparation: Clean surfaces to comply with SSPC-SP 1 to remove dirt, oil, grease, and other contaminants that could impair paint bond. Grind welds and polish surfaces to a smooth, even finish. Remove mill scale and rust, if present, from uncoated steel, according to SSPC-SP 5/NACE No. 1 or SSPC-SP 8.
2. Interior Surfaces of Pole: One coat of bituminous paint, or otherwise treat for equal corrosion protection.
3. Exterior Surfaces: Manufacturer's standard finish consisting of one or more coats of primer and two finish coats of high-gloss, high-build polyurethane enamel.

    a. Color: Match Landscape Architect's RAL # sample.

J. Powder-Coat Finish: Comply with NAAMM's "Metal Finishes Manual for Architectural and Metal Products" recommendations for applying and designating finishes.

1. Surface Preparation: Clean surfaces to comply with SSPC-SP 1 to remove dirt, oil, grease, and other contaminants that could impair powder coat bond. Grind welds and polish surfaces to a smooth, even finish. Remove mill scale and rust, if present, from uncoated steel, according to SSPC-SP 5/NACE No. 1 or SSPC-SP 8.
2. Powder coat shall comply with AAMA 2604.

    a. Electrostatic applied powder coating; single application with a minimum 2.5- to 3.5-mils dry film thickness; cured according to

manufacturer's instructions. Coat interior and exterior of pole for equal corrosion protection.

b. Color: Match Landscape Architect's RAL #.

2.4 POLE ACCESSORIES

A. Base Covers: Manufacturers' standard metal units, finished same as pole, and arranged to cover pole's mounting bolts and nuts.

B. Transformer-Type Base: Same material and color as pole. Coordinate dimensions to suit pole's base flange and to accept ballast(s**)** or drivers. Include removable flanged access cover secured with bolts or screws.

2.5 MOUNTING HARDWARE

A. Anchor Bolts: Manufactured to ASTM F 1554, Grade 55, with a minimum yield strength of 55,000 psi.

1. Galvanizing: Hot dip galvanized according to ASTM A 153, Class C
2. Bent rods (see structural) in length.
3. Threading: Uniform National 8, Class 2A.

B. Nuts: ASTM A 563, Grade A, Heavy-Hex

1. Galvanizing: Hot dip galvanized according to ASTM A 153, Class C.
2. Two nuts provided per anchor bolt , shipped with nuts pre-assembled to the anchor bolts.

C. Washers: ASTM F 436, Type 1.

1. Galvanizing: Hot dip galvanized according to ASTM A 153, Class C.
2. Two washers provided per anchor bolt.

2.6 GENERAL FINISH REQUIREMENTS

A. Protect mechanical finishes on exposed surfaces from damage by applying a strippable, temporary protective covering before shipping.

B. Appearance of Finished Work: Noticeable variations in same piece are unacceptable. Variations in appearance of adjoining components are acceptable if they are within the range of approved Samples and are assembled or installed to minimize contrast.

PART 3 - EXECUTION

3.1 POLE FOUNDATION

A. Concrete Pole Foundations: Cast in place, with anchor bolts to match pole-base flange. Structural steel complying with ASTM A 36/A 36M and hot-dip galvanized according to ASTM A 123/A 123 M; and with top-plate and mounting bolts to match pole-base flange and strength required to support pole, luminaire, and accessories. Concrete, reinforcement, and formwork are specified in Section 033000 "Cast-in-Place Concrete."

B. Pre-Cast Foundations: Factory fabricated, with structural steel complying with ASTM A 36/A 36M and hot-dip galvanized according to ASTM A 123/A 123M; and with top-plate and mounting bolts to match pole-base flange and strength required to support pole, luminaire, and accessories. Concrete, reinforcement, and formwork are specified in Section 033000 "Cast-in-Place Concrete."

C. Power-Installed Screw Foundations: Factory fabricated by pole manufacturer, with structural steel complying with ASTM A 36/A 36M and hot-dip galvanized according to ASTM A 123/A 123M; and with top-plate and mounting bolts to match pole-base flange and strength required to support pole, luminaire, and accessories.

   1. Baseplate: Stamped with manufacturer's name, date of production, and cable entry.

D. Direct-Buried Foundations: Install to depth indicated on Drawings, per Structural Engineer. To ensure a plumb installation, continuously check pole orientation with plumb bob while tamping.

E. Direct-Buried Poles with Concrete Backfill: Set poles in augered holes to depth below finished grade indicated on Drawings, per Structural Engineer. To ensure a plumb installation, continuously check pole orientation with plumb bob while tamping.

   1. Make holes 6 inches in diameter larger than pole diameter.
   2. Fill augered hole around pole with air-entrained concrete having a minimum compressive strength of 3000 psi at 28 days and finish in a dome above finished grade.
   3. Use a short piece of 1/2-inch diameter pipe to make a drain hole through grout. Arrange to drain condensation from interior of pole.
   4. Cure concrete a minimum of 72 hours before performing work on pole.

F. Anchor Bolts: Install plumb using manufacturer-suppliedtemplate, uniformly spaced.

3.2 POLE INSTALLATION

A. Concrete Pole Foundations: Set anchor bolts according to anchor-bolt templates furnished by pole manufacturer. Concrete materials, installation, and finishing requirements are specified in Section 033000 "Cast-in-Place Concrete."

B. Foundation-Mounted Poles: Mount pole with leveling nuts and tighten top nuts to torque level according to pole manufacturer's written instructions.

C. Poles and Pole Foundations Set in Concrete-Paved Areas: Install poles with a minimum 6-inch- wide, unpaved gap between the pole or pole foundation and the edge of the adjacent concrete slab. Fill unpaved ring with pea gravel. Insert material to a level 1 inch below top of concrete slab.

D. Raise and set pole using web fabric slings (not chain or cable) at locations indicated by manufacturer.

3.3 CORROSION PREVENTION

A. Aluminum: Do not use in contact with earth or concrete. When in direct contact with a dissimilar metal, protect aluminum using insulating fittings or treatment.

B. Steel Conduits: Comply with requirements in Section 260533 "Raceways and Boxes for Electrical Systems." In concrete foundations, wrap conduit with 0.010-inch-thick, pipe-wrapping plastic tape applied with a 50-percent overlap.

3.4 GROUNDING

A. Ground Metal Poles and Support Structures: Comply with requirements in Section 260526 "Grounding and Bonding for Electrical Systems."

1. Install grounding electrode for each pole unless otherwise indicated.
2. Install grounding conductor pigtail in the base for connecting luminaire to grounding system.

B. Ground Nonmetallic Poles and Support Structures: Comply with requirements in Section 260526 "Grounding and Bonding for Electrical Systems."

1. Install grounding electrode for each pole.

2. Install grounding conductor and conductor protector.
3. Ground metallic components of pole accessories and foundation.

END OF SECTION 265613

SECTION 265619 - LED EXTERIOR LIGHTING

PART 1 - GENERAL

1.1 SUMMARY

A. Section Includes:

1. Exterior solid-state luminaires that are designed for and exclusively use LED lamp technology.
2. Luminaire supports.
3. Luminaire-mounted photoelectric relays.

B. Related Requirements:

1. Section 260923 "Lighting Control Devices" for automatic control of lighting, including time switches, photoelectric relays, occupancy sensors, and multipole lighting relays and contactors.
2. Section 260926 "Lighting Control Panelboards" for panelboard-based lighting control.
3. Section 260943.16 "Addressable-Fixture Lighting Controls" and Section 260943.23 "Relay-Based Lighting Controls" for manual or programmable control systems with low-voltage control wiring or data communication circuits.
4. Section 265613 "Lighting Poles and Standards" for poles and standards used to support exterior lighting equipment.

1.2 DEFINITIONS

A. CCT: Correlated color temperature.

B. CRI: Color rendering index.

C. Fixture: See "Luminaire."

D. IP: International Protection or Ingress Protection Rating

E. Lumen: Measured output of lamp and luminaire, or both.

F. Luminaire: Complete lighting unit, including lamp, reflector, and housing.

1.3 ACTION SUBMITTALS

A. Product Data: For each type of luminaire.

B. Shop Drawings: For nonstandard or custom luminaires.

1. Include plans, elevations, sections, and mounting and attachment details.
2. Include details of luminaire assemblies. Indicate dimensions, weights, loads, required clearances, method of field assembly, components, and location and size of each field connection.
3. Include diagrams for power, signal, and control wiring.

C. LEED Submittals:

1. Product Data for Credit EA 5: For specified metering equipment.
2. Product Data for Credit MR 4: For products having recycled content, documentation indicating percentages by weight of postconsumer and preconsumer recycled content. Include statement indicating cost for each product having recycled content.

D. Delegated-Design Submittal: For luminaire supports.

1. Include design calculations for luminaire supports including EPA and seismic loads.

1.4 INFORMATIONAL SUBMITTALS

A. Coordination Drawings: Plans, drawn to scale and coordinated.

B. Seismic Qualification Certificates: For luminaires, accessories, and components, from manufacturer.

C. Product Certificates: For each type of the following:

1. Luminaire.
2. Integral motion sensor.

D. Sample warranty.

1.5 CLOSEOUT SUBMITTALS

A. Operation and maintenance data.

1. Provide a list of all lamp types used on Project. Use ANSI and manufacturers' codes.
2. Provide a list of all photoelectric relay types used on Project; use manufacturers' codes.

1.6 FIELD CONDITIONS

A. Mark locations of exterior luminaires for approval by Architect prior to the start of luminaire installation.

1.7 WARRANTY

A. Warranty: Manufacturer and Installer agree to repair or replace components of luminaires that fail in materials or workmanship within specified warranty period.

1. Warranty Period: 2 year(s) from date of Substantial Completion.

PART 2 - PRODUCTS

2.1 PERFORMANCE REQUIREMENTS

A. Seismic Performance: Luminaires shall withstand the effects of earthquake motions determined according to **ASCE/SEI 7**.

B. Seismic Performance: Luminaires and lamps shall be labeled vibration and shock resistant.

1. The term "withstand" means "the luminaire will remain in place without separation of any parts when subjected to the seismic forces specified and the luminaire will be fully operational during and after the seismic event."

2.2 LUMINAIRE REQUIREMENTS

A. Electrical Components, Devices, and Accessories: Listed and labeled as defined in NFPA 70, by a qualified testing agency, and marked for intended location and application.

B. NRTL Compliance: Luminaires shall be listed and labeled for indicated class and division of hazard by an NRTL.

C. FM Global Compliance: Luminaires for hazardous locations shall be listed and labeled for indicated class and division of hazard by FM Global.

D. UL Compliance: Comply with UL 1598 and listed for wet location.

E. Lamp base complying with ANSI C81.61.

F. CRI of minimum70 CCT of 3000 K.

G. L70 lamp life of **50,000**hours.

H. Lamps dimmable from 100 percent to 0 percent of maximum light output.

I. Nominal Operating Voltage: 240 V ac.

J. In-line Fusing: On the primary for each luminaire.

K. Lamp Rating: Lamp marked for outdoor use.

L. Source Limitations: Obtain luminaires from single source from a single manufacturer.

M. Source Limitations: For luminaires, obtain each color, grade, finish, type, and variety of luminaire from single source with resources to provide products of consistent quality in appearance and physical properties.

2.3 LUMINAIRE TYPES

A. Area and Site:
   1. Luminaire Shape: Round, historic bell shape
   2. Mounting: Pole, single arm mount of extruded-aluminum.
   3. Luminaire-Mounting Height: 15’-0”.
   4. Distribution: Type II.

2.4 MATERIALS

A. Metal Parts: Free of burrs and sharp corners and edges.

B. Sheet Metal Components: Corrosion-resistant aluminum. Form and support to prevent warping and sagging.

C. Doors, Frames, and Other Internal Access: Smooth operating, free of light leakage under operating conditions, and designed to permit relamping without use of tools. Designed to prevent doors, frames, lenses, diffusers, and other components from falling accidentally during relamping and when secured in operating position. Doors shall be removable for cleaning or replacing lenses.

D. Diffusers and Globes:

1. Acrylic Diffusers: 100 percent virgin acrylic plastic, with high resistance to yellowing and other changes due to aging, exposure to heat, and UV radiation.
2. Glass: Annealed crystal glass unless otherwise indicated.
3. Lens Thickness: At least 0.125 inch minimum unless otherwise indicated.

E. Lens and Refractor Gaskets: Use heat- and aging-resistant resilient gaskets to seal and cushion lenses and refractors in luminaire doors.

F. Reflecting surfaces shall have minimum reflectance as follows unless otherwise indicated:

1. White Surfaces: 85 percent.
2. Specular Surfaces: 83 percent.
3. Diffusing Specular Surfaces: 75 percent.

G. Housings:

1. Rigidly formed, weather- and light-tight enclosure that will not warp, sag, or deform in use.
2. Provide filter/breather for enclosed luminaires.

2.5 FINISHES

A. Variations in Finishes: Noticeable variations in same piece are unacceptable. Variations in appearance of adjoining components are acceptable if they are within the range of approved Samples and are assembled or installed to minimize contrast.

B. Luminaire Finish: Manufacturer's standard paint applied to factory-assembled and -tested luminaire before shipping. Where indicated, match finish process and color of pole or support materials.

C. Factory-Applied Finish for Aluminum Luminaires: Comply with NAAMM's "Metal Finishes Manual for Architectural and Metal Products" for recommendations for applying and designating finishes.

1. Finish designations prefixed by AA comply with the system established by the Aluminum Association for designating aluminum finishes.
2. Natural Satin Finish: Provide fine, directional, medium satin polish (AA-M32); buff complying with AA-M20 requirements; and seal aluminum surfaces with clear, hard-coat wax.

3. Class I, Clear-Anodic Finish: AA-M32C22A41 (Mechanical Finish: Medium satin; Chemical Finish: Etched, medium matte; Anodic Coating: Architectural Class I, clear coating 0.018 mm or thicker) complying with AAMA 611.
4. Class I, Color-Anodic Finish: AA-M32C22A42/A44 (Mechanical Finish: Medium satin; Chemical Finish: Etched, medium matte; Anodic Coating: Architectural Class I, integrally colored or electrolytically deposited color coating 0.018 mm or thicker), complying with AAMA 611.

    a. Color: Verify with Landscape Architect RAL # for site fixtures.

D. Factory-Applied Finish for Steel Luminaires: Comply with NAAMM's "Metal Finishes Manual for Architectural and Metal Products" for recommendations for applying and designating finishes.

1. Surface Preparation: Clean surfaces to comply with SSPC-SP 1, to remove dirt, oil, grease, and other contaminants that could impair paint bond. Grind welds and polish surfaces to a smooth, even finish. Remove mill scale and rust, if present, from uncoated steel, complying with SSPC-SP 5/NACE No. 1 or SSPC-SP 8.
2. Exterior Surfaces: Manufacturer's standard finish consisting of one or more coats of primer and two finish coats of high-gloss, high-build polyurethane enamel.

    a. Color: As selected from manufacturer's standard catalog of colors.
    b. Color: Match Landscape Architect's sample of RAL # custom color.
    c. Color: As selected by Architect from manufacturer's full range.

2.6 LUMINAIRE SUPPORT COMPONENTS

A. Comply with requirements in Section 260529 "Hangers and Supports for Electrical Systems" for channel and angle iron supports and nonmetallic channel and angle supports.

PART 3 - EXECUTION

3.1 GENERAL INSTALLATION REQUIREMENTS

A. Comply with NECA 1.

B. Use fastening methods and materials selected to resist seismic forces defined for the application and approved by manufacturer.

C. Install lamps in each luminaire.

D. Fasten luminaire to structural support.

E. Supports:

1. Sized and rated for luminaire weight.
2. Able to maintain luminaire position after cleaning and relamping.
3. Support luminaires without causing deflection of finished surface.
4. Luminaire-mounting devices shall be capable of supporting a horizontal force of 100 percent of luminaire weight and a vertical force of 400 percent of luminaire weight.

F. Wiring Method: Install cables in raceways. Conceal raceways and cables.

G. Install luminaires level, plumb, and square with finished grade unless otherwise indicated.

H. Coordinate layout and installation of luminaires with other construction.

I. Adjust luminaires that require field adjustment or aiming. Include adjustment of photoelectric device to prevent false operation of relay by artificial light sources, favoring a north orientation.

J. Comply with requirements in Section 260519 "Low-Voltage Electrical Power Conductors and Cables" and 260533 "Raceways and Boxes for Electrical Systems" for wiring connections and wiring methods.

3.2 INSTALLATION OF INDIVIDUAL GROUND-MOUNTED LUMINAIRES

A. Aim as indicated on Drawings.

B. Install on concrete base with top 12 inches above finished grade or surface at luminaire location. Cast conduit into base, and finish by troweling and rubbing smooth. Concrete materials, installation, and finishing are specified in Section 033000 "Cast-in-Place Concrete."

3.3 CORROSION PREVENTION

A. Aluminum: Do not use in contact with earth or concrete. When in direct contact with a dissimilar metal, protect aluminum by insulating fittings or treatment.

B. Steel Conduits: Comply with Section 260533 "Raceways and Boxes for Electrical Systems." In concrete foundations, wrap conduit with 0.010-inch thick, pipe-wrapping plastic tape applied with a 50 percent overlap.

3.4 IDENTIFICATION

A. Identify system components, wiring, cabling, and terminals. Comply with requirements for identification specified in Section 260553 "Identification for Electrical Systems."

3.5 FIELD QUALITY CONTROL

A. Inspect each installed luminaire for damage. Replace damaged luminaires and components.

B. Perform the following tests and inspections with the assistance of a factory-authorized service representative:

1. Operational Test: After installing luminaires, switches, and accessories, and after electrical circuitry has been energized, test units to confirm proper operation.
2. Verify operation of photoelectric controls.

C. Illumination Tests:

1. Measure light intensities at night. Use photometers with calibration referenced to NIST standards. Comply with the following IES testing guide(s):

   a. IES LM-5.
   b. IES LM-50.
   c. IES LM-52.
   d. IES LM-64.
   e. IES LM-72.

2. Operational Test: After installing luminaires, switches, and accessories, and after electrical circuitry has been energized, test units to confirm proper operation.

D. Luminaire will be considered defective if it does not pass tests and inspections.

E. Prepare a written report of tests, inspections, observations, and verifications indicating and interpreting results. If adjustments are made to lighting system, retest to demonstrate compliance with standards.

F. Upon award of bid, contact and procure contract with Third Party Title 24 Commissioning agent, review all Electrical Plans for compliance with the Nonresidential Title 24 Outdoor Lighting manual, and inform Engineer of any corrective actions necessary to the plans prior to ordering fixtures and commencing any earthwork on site. Cost for Commissioning and any Title 24 Acceptance Testing shall be at Contractor's expense and included in bid.

3.6 DEMONSTRATION

A. Train Owner's maintenance personnel to adjust, operate, and maintain luminaires and photocell relays.

END OF SECTION 265619

SECTION 311000 - SITE CLEARING

PART 1 - GENERAL

1.1 SUMMARY

A. Section Includes:

1. Protecting existing vegetation to remain.
2. Removing existing vegetation.
3. Clearing and grubbing.
4. Stripping and stockpiling topsoil.
5. Removing above- and below-grade site improvements.
6. Disconnecting, capping, or sealing site utilities.
7. Temporary erosion and sedimentation control.

1.2 PREINSTALLATION MEETINGS

A. Preinstallation Conference: Conduct conference at Village Pond Park.

1.3 MATERIAL OWNERSHIP

A. Except for materials indicated to be stockpiled or otherwise to remain Owner's property, cleared materials shall become Contractor's property and shall be removed from Project site.

1.4 FIELD CONDITIONS

A. Traffic: Minimize interference with adjoining roads, streets, walks, and other adjacent occupied or used facilities during site-clearing operations.

1. Do not close or obstruct streets, walks, or other adjacent occupied or used facilities without permission from Owner and authorities having jurisdiction.
2. Provide alternate routes around closed or obstructed traffic ways if required by Owner or authorities having jurisdiction.

B. Salvageable Improvements: Carefully remove items indicated to be salvaged and store on Owner's premises **as indicated by City Representative**.

C. Utility Locator Service: Notify utility locator service for area where Project is located before site clearing.

D. Do not commence site clearing operations until temporary erosion- and sedimentation-control **and plant-protection** measures are in place.

E. Tree- and Plant-Protection Zones: Protect according to requirements in Section 015639 "Temporary Tree and Plant Protection."

PART 2 - PRODUCTS

2.1 MATERIALS

A. Satisfactory Soil Material: Requirements for satisfactory soil material are specified in Section 312000 "Earth Moving."

1. Obtain approved borrow soil material off-site when satisfactory soil material is not available on-site.

PART 3 - EXECUTION

3.1 PREPARATION

A. Protect and maintain benchmarks and survey control points from disturbance during construction.

B. Verify that trees, shrubs, and other vegetation to remain or to be relocated have been flagged and that protection zones have been identified and enclosed

according to requirements in Section 015639 "Temporary Tree and Plant Protection."

C. Protect existing site improvements to remain from damage during construction.

1. Restore damaged improvements to their original condition, as acceptable to Owner.

3.2 TEMPORARY EROSION AND SEDIMENTATION CONTROL

A. Provide temporary erosion- and sedimentation-control measures to prevent soil erosion and discharge of soil-bearing water runoff or airborne dust to adjacent properties and walkways, according to erosion- and sedimentation-control Drawings and requirements of authorities having jurisdiction.

B. Verify that flows of water redirected from construction areas or generated by construction activity do not enter or cross protection zones.

C. Inspect, maintain, and repair erosion- and sedimentation-control measures during construction until permanent vegetation has been established.

D. Remove erosion and sedimentation controls, and restore and stabilize areas disturbed during removal.

3.3 TREE AND PLANT PROTECTION

A. Protect trees and plants remaining on-site according to requirements in Section 015639 "Temporary Tree and Plant Protection."

B. Repair or replace trees, shrubs, and other vegetation indicated to remain or be relocated that are damaged by construction operations according to requirements in Section 015639 "Temporary Tree and Plant Protection."

3.4 EXISTING UTILITIES

A. Locate, identify, disconnect, and seal or cap utilities indicated to be removed or abandoned in place.

1. Arrange with utility companies to shut off indicated utilities.

B. Interrupting Existing Utilities: Do not interrupt utilities serving facilities occupied by Owner or others, unless permitted under the following conditions and then

only after arranging to provide temporary utility services according to requirements indicated:

1. Notify Architect not less than two days in advance of proposed utility interruptions.
2. Do not proceed with utility interruptions without Architect's written permission.

C. Removal of underground utilities is included in earthwork sections; in applicable fire suppression, plumbing, HVAC, electrical, communications, electronic safety and security, and utilities sections; and in Section 024116 "Structure Demolition" and Section 024119 "Selective Demolition."

3.5 CLEARING AND GRUBBING

A. Remove obstructions, trees, shrubs, and other vegetation to permit installation of new construction.

1. Grind down stumps and remove roots larger than 3 inches (75 mm) in diameter, obstructions, and debris to a depth of 18 inches (450 mm) below exposed sub grade.
2. Use only hand methods or air spade for grubbing within protection zones.

B. Fill depressions caused by clearing and grubbing operations with satisfactory soil material unless further excavation or earthwork is indicated.

1. Place fill material in horizontal layers not exceeding a loose depth of 8 inches (200 mm), and compact each layer to a density equal to adjacent original ground.

3.6 TOPSOIL STRIPPING

A. Remove sod and grass before stripping topsoil.

B. Strip topsoil to depth of **6 inches (150 mm)** in a manner to prevent intermingling with underlying subsoil or other waste materials.

C. Stockpile topsoil away from edge of excavations without intermixing with subsoil or other materials. Grade and shape stockpiles to drain surface water. Cover to prevent windblown dust and erosion by water.

3.7 SITE IMPROVEMENTS

A. Remove existing above- and below-grade improvements as indicated and necessary to facilitate new construction.

3.8 DISPOSAL OF SURPLUS AND WASTE MATERIALS

A. Remove surplus soil material, unsuitable topsoil, obstructions, demolished materials, and waste materials including trash and debris, and legally dispose of them off Owner's property.

B. Separate recyclable materials produced during site clearing from other no recyclable materials. Store or stockpile without intermixing with other materials, and transport them to recycling facilities. Do not interfere with other Project work.

END OF SECTION 311000

SECTION 312000 - EARTH MOVING

PART 1 - GENERAL

1.1 SUMMARY

A. Section Includes:

1. Excavating and filling for rough grading the Site.
2. Preparing sub grades for **slabs-on-grade, walks, turf and grasses and plants**.
3. Drainage course for concrete slabs-on-grade.
4. Sub base course for concrete **walks**.
5. Excavating and backfilling trenches for utilities and pits for buried utility structures.

1.2 DEFINITIONS

A. Backfill: Soil material used to fill an excavation.

1. Initial Backfill: Backfill placed beside and over pipe in a trench, including haunches to support sides of pipe.
2. Final Backfill: Backfill placed over initial backfill to fill a trench.

B. Base Course: Aggregate layer placed between the sub base course and hot-mix asphalt paving.

C. Bedding Course: Aggregate layer placed over the excavated sub grade in a trench before laying pipe.

D. Borrow Soil: Satisfactory soil imported from off-site for use as fill or backfill.

E. Drainage Course: Aggregate layer supporting the slab-on-grade that also minimizes upward capillary flow of pore water.

F. Excavation: Removal of material encountered above sub grade elevations and to lines and dimensions indicated.

1. Authorized Additional Excavation: Excavation below sub grade elevations or beyond indicated lines and dimensions as directed by Architect. Authorized additional excavation and replacement material will be paid for according to Contract provisions for changes in the Work.

2. Unauthorized Excavation: Excavation below sub grade elevations or beyond indicated lines and dimensions without direction by Architect. Unauthorized excavation, as well as remedial work directed by Architect, shall be without additional compensation.

G. Fill: Soil materials used to raise existing grades.

H. Structures: Buildings, footings, foundations, retaining walls, slabs, tanks, curbs, mechanical and electrical appurtenances, or other man-made stationary features constructed above or below the ground surface.

I. Sub base Course: Aggregate layer placed between the sub grade and base course for hot-mix asphalt pavement, or aggregate layer placed between the sub grade and a cement concrete pavement or a cement concrete or hot-mix asphalt walk.

J. Sub grade: Uppermost surface of an excavation or the top surface of a fill or backfill immediately below sub base, drainage fill, drainage course, or topsoil materials.

K. Utilities: On-site underground pipes, conduits, ducts, and cables as well as underground services within buildings.

1.3 PREINSTALLATION MEETINGS

A. Pre-installation Conference: Conduct pre-excavation conference at **Project site**.

1.4 INFORMATIONAL SUBMITTALS

A. Material test reports.

1.5 FIELD CONDITIONS

A. Utility Locator Service: Notify utility locator service for area where Project is located before beginning earth-moving operations.

B. Do not commence earth-moving operations until plant-protection measures specified in Section 015639 "Temporary Tree and Plant Protection" are in place.

PART 2 - PRODUCTS

2.1 SOIL MATERIALS

A. General: Provide borrow soil materials when sufficient satisfactory soil materials are not available from excavations.

B. Satisfactory Soils: Soil Classification **Groups GW, GP, GM, SW, SP, and SM according to ASTM D 2487, Groups A-1, A-2-4, A-2-5, and A-3 according to AASHTO M 145**], or a combination of these groups; free of rock or gravel larger than **3 inches (75 mm)** in any dimension, debris, waste, frozen materials, vegetation, and other deleterious matter.

1. Liquid Limit: <Per Geotechnical or City Representative >.
2. Plasticity Index: <Per Geotechnical or City Representative>.

C. Unsatisfactory Soils: Soil Classification [**Groups GC, SC, CL, ML, OL, CH, MH, OH, and PT according to ASTM D 2487**] [**Groups A-2-6, A-2-7, A-4, A-5, A-6, and A-7 according to AASHTO M 145**], or a combination of these groups.

1. Unsatisfactory soils also include satisfactory soils not maintained within 2 percent of optimum moisture content at time of compaction.

D. Sub base Material: Naturally or artificially graded mixture of natural or crushed gravel, crushed stone, and natural or crushed sand; ASTM D 2940/D 2940M; with at least 90 percent passing a 1-1/2-inch (37.5-mm) sieve and not more than 12 percent passing a No. 200 (0.075-mm) sieve.

E. Base Course: Naturally or artificially graded mixture of natural or crushed gravel, crushed stone, and natural or crushed sand; ASTM D 294**/**D 2940M 0; with at least 95 percent passing a 1-1/2-inch (37.5-mm) sieve and not more than 8 percent passing a No. 200 (0.075-mm) sieve.

F. Engineered Fill: Naturally or artificially graded mixture of natural or crushed gravel, crushed stone, and natural or crushed sand; ASTM D 2940/D 2940M; with at least 90 percent passing a 1-1/2-inch (37.5-mm) sieve and not more than 12 percent passing a No. 200 (0.075-mm) sieve.

G. Bedding Course: Naturally or artificially graded mixture of natural or crushed gravel, crushed stone, and natural or crushed sand; ASTM D 2940/D 2940M; except with 100 percent passing a 1-inch (25-mm) sieve and not more than 8 percent passing a No. 200 (0.075-mm) sieve.

H. Drainage Course: Narrowly graded mixture of **washed** crushed stone, or crushed or uncrushed gravel; ASTM D 448; coarse-aggregate grading Size 57;

with 100 percent passing a 1-1/2-inch (37.5-mm) sieve and zero to 5 percent passing a No. 8 (2.36-mm) sieve.

2.2 ACCESSORIES

A. Warning Tape: Acid- and alkali-resistant, polyethylene film warning tape manufactured for marking and identifying underground utilities, 6 inches (150 mm) wide and 4 mils (0.1 mm) thick, continuously inscribed with a description of the utility; colored to comply with local practice or requirements of authorities having jurisdiction.

B. Detectable Warning Tape: Acid- and alkali-resistant, polyethylene film warning tape manufactured for marking and identifying underground utilities, a minimum of 6 inches (150 mm) wide and 4 mils (0.1 mm) thick, continuously inscribed with a description of the utility, with metallic core encased in a protective jacket for corrosion protection, detectable by metal detector when tape is buried up to 30 inches (750 mm) deep; colored to comply with local practice or requirements of authorities having jurisdiction.

PART 3 - EXECUTION

3.1 PREPARATION

A. Protect structures, utilities, sidewalks, pavements, and other facilities from damage caused by settlement, lateral movement, undermining, washout, and other hazards created by earth-moving operations.

B. Protect and maintain erosion and sedimentation controls during earth-moving operations.

3.2 EXCAVATION, GENERAL

A. Unclassified Excavation: Excavate to sub grade elevations regardless of the character of surface and subsurface conditions encountered. Unclassified excavated materials may include rock, soil materials, and obstructions. No changes in the Contract Sum or the Contract Time will be authorized for rock excavation or removal of obstructions.

1. If excavated materials intended for fill and backfill include unsatisfactory soil materials and rock, replace with satisfactory soil materials.

3.3 EXCAVATION FOR STRUCTURES

A. Excavate to indicated elevations and dimensions within a tolerance of plus or minus 1 inch (25 mm). If applicable, extend excavations a sufficient distance from structures for placing and removing concrete formwork, for installing services and other construction, and for inspections.

1. Excavations for Footings and Foundations: Do not disturb bottom of excavation. Excavate by hand to final grade just before placing concrete reinforcement. Trim bottoms to required lines and grades to leave solid base to receive other work.
2. Pile Foundations: Stop excavations 6 to 12 inches (150 to 300 mm) above bottom of pile cap before piles are placed. After piles have been driven, remove loose and displaced material. Excavate to final grade, leaving solid base to receive concrete pile caps.
3. Excavation for Underground Tanks, Basins, and Mechanical or Electrical Utility Structures: Excavate to elevations and dimensions indicated within a tolerance of plus or minus 1 inch (25 mm). Do not disturb bottom of excavations intended as bearing surfaces.

B. Excavations at Edges of Tree- and Plant-Protection Zones:

1. Excavate by hand or with an air spade to indicated lines, cross sections, elevations, and sub grades. If excavating by hand, use narrow-tine spading forks to comb soil and expose roots. Do not break, tear, or chop exposed roots. Do not use mechanical equipment that rips, tears, or pulls roots.
2. Cut and protect roots according to requirements in Section 015639 "Temporary Tree and Plant Protection."

3.4 EXCAVATION FOR WALKS AND PAVEMENTS

A. Excavate surfaces under walks and pavements to indicated lines, cross sections, elevations, and sub grades.

3.5 EXCAVATION FOR UTILITY TRENCHES

A. Excavate trenches to indicated gradients, lines, depths, and elevations.

B. Excavate trenches to uniform widths to provide the following clearance on each side of pipe or conduit. Excavate trench walls vertically from trench bottom to 12 inches (300 mm) higher than top of pipe or conduit unless otherwise indicated.

1. Clearance: **12 inches (300 mm) each side of pipe or conduit**.

C. Trench Bottoms: Excavate and shape trench bottoms to provide uniform bearing and support of pipes and conduit. Shape subgrade to provide continuous support for bells, joints, and barrels of pipes and for joints, fittings, and bodies of conduits. Remove projecting stones and sharp objects along trench subgrade.

1. Excavate trenches 6 inches (150 mm) deeper than elevation required in rock or other unyielding bearing material to allow for bedding course.

D. Trenches in Tree- and Plant-Protection Zones:

1. Hand-excavate to indicated lines, cross sections, elevations, and subgrades. Use narrow-tine spading forks to comb soil and expose roots. Do not break, tear, or chop exposed roots. Do not use mechanical equipment that rips, tears, or pulls roots.
2. Do not cut main lateral roots or taproots; cut only smaller roots that interfere with installation of utilities.
3. Cut and protect roots according to requirements in Section 015639 "Temporary Tree and Plant Protection."

3.6 SUBGRADE INSPECTION

A. Proof-roll sub grade [**below the building slabs and pavements**] **<Insert locations>** with a pneumatic-tired dump truck to identify soft pockets and areas of excess yielding. Do not proof-roll wet or saturated sub grades.

B. Reconstruct sub grades damaged by freezing temperatures, frost, rain, accumulated water, or construction activities, as directed by Architect, without additional compensation.

3.7 UNAUTHORIZED EXCAVATION

A. Fill unauthorized excavation under foundations or wall footings by extending bottom elevation of concrete foundation or footing to excavation bottom, without altering top elevation. Lean concrete fill, with 28-day compressive strength of 2500 psi (17.2 MPa), may be used when approved by Architect.

1. Fill unauthorized excavations under other construction, pipe, or conduit as directed by Architect.

3.8 STORAGE OF SOIL MATERIALS

A. Stockpile borrow soil materials and excavated satisfactory soil materials without intermixing. Place, grade, and shape stockpiles to drain surface water. Cover to prevent windblown dust.

1. Stockpile soil materials away from edge of excavations. Do not store within drip line of remaining trees.

3.9 UTILITY TRENCH BACKFILL

A. Place backfill on sub grades free of mud, frost, snow, or ice.

B. Place and compact bedding course on trench bottoms and where indicated. Shape bedding course to provide continuous support for bells, joints, and barrels of pipes and for joints, fittings, and bodies of conduits.

C. Trenches under Footings: Backfill trenches excavated under footings and within **18 inches (450 mm)** of bottom of footings with satisfactory soil; fill with concrete to elevation of bottom of footings. Concrete is specified in **Section 033000 "Cast-in-Place Concrete."**

D. Trenches under Roadways: N/A

E. Initial Backfill: Place and compact initial backfill of **sub base material**, free of particles larger than **1 inch (25 mm)** in any dimension, to a height of 12 inches (300 mm) over the pipe or conduit.

1. Carefully compact initial backfill under pipe haunches and compact evenly up on both sides and along the full length of piping or conduit to avoid damage or displacement of piping or conduit. Coordinate backfilling with utilities testing.

F. Final Backfill: Place and compact final backfill of satisfactory soil to final sub grade elevation.

G. Warning Tape: Install warning tape directly above utilities, 12 inches (300 mm) below finished grade, except 6 inches (150 mm) below sub grade under pavements and slabs.

3.10 SOIL FILL

A. Plow, scarify, bench, or break up sloped surfaces steeper than 1 vertical to 4 horizontal so fill material will bond with existing material.

B. Place and compact fill material in layers to required elevations as follows:

1. Under grass and planted areas, use satisfactory soil material.
2. Under walks and pavements, use satisfactory soil material.
3. Under steps and ramps, use engineered fill.
4. Under building slabs, use engineered fill.
5. Under footings and foundations, use engineered fill.

3.11 SOIL MOISTURE CONTROL

A. Uniformly moisten or aerate sub grade and each subsequent fill or backfill soil layer before compaction to within 2 percent of optimum moisture content.

1. Do not place backfill or fill soil material on surfaces that are muddy, frozen, or contain frost or ice.
2. Remove and replace, or scarify and air dry, otherwise satisfactory soil material that exceeds optimum moisture content by 2 percent and is too wet to compact to specified dry unit weight.

3.12 COMPACTION OF SOIL BACKFILLS AND FILLS

A. Place backfill and fill soil materials in layers not more than **8 inches (200 mm)** in loose depth for material compacted by heavy compaction equipment and not more than 4 inches (100 mm) in loose depth for material compacted by hand-operated tampers.

B. Place backfill and fill soil materials evenly on all sides of structures to required elevations and uniformly along the full length of each structure.

C. Compact soil materials to not less than the following percentages of maximum dry unit weight according to **ASTM D 1557**:

1. Under structures, building slabs, steps, and pavements, scarify and re-compact top 12 inches (300 mm) of existing sub grade and each layer of backfill or fill soil material at **95** percent.
2. Under walkways, scarify and re-compact top 6 inches (150 mm) below sub grade and compact each layer of backfill or fill soil material at **90** percent.
3. Under turf or unpaved areas, scarify and re-compact top 6 inches (150 mm) below sub grade and compact each layer of backfill or fill soil material at **85** percent.
4. For utility trenches, compact each layer of initial and final backfill soil material at **85** percent.

3.13 GRADING

A. General: Uniformly grade areas to a smooth surface, free of irregular surface changes. Comply with compaction requirements and grade to cross sections, lines, and elevations indicated.

B. Site Rough Grading: Slope grades to direct water away from buildings and to prevent ponding. Finish subgrades to elevations required to achieve indicated finish elevations, within the following subgrade tolerances:

1. Turf or Unpaved Areas: Plus or minus **1 inch (25 mm)**.
2. Walks: Plus or minus **1 inch (25 mm)**.
3. Pavements: Plus or minus **1/2 inch (13 mm)**.

C. Grading inside Building Lines: N/A.

3.14 SUBBASE AND BASE COURSES UNDER PAVEMENTS AND WALKS

A. Place sub base course **and base course** on sub grades free of mud, frost, snow, or ice.

B. On prepared sub grade, place sub base course **and base course** under pavements and walks as follows:

1. Shape sub base course **and base course** to required crown elevations and cross-slope grades.
2. Place sub base course **and base course** that exceeds 6 inches (150 mm) in compacted thickness in layers of equal thickness, with no compacted layer more than 6 inches (150 mm) thick or less than 3 inches (75 mm) thick.
3. Compact sub base course **and base course** at optimum moisture content to required grades, lines, cross sections, and thickness to not less than **95** percent of maximum dry unit weight according to **ASTM D 1557**.

3.15 DRAINAGE COURSE UNDER CONCRETE SLABS-ON-GRADE

A. Place drainage course on subgrades free of mud, frost, snow, or ice.

B. On prepared subgrade, place and compact drainage course under cast-in-place concrete slabs-on-grade as follows:

1. Place drainage course that exceeds 6 inches (150 mm) in compacted thickness in layers of equal thickness, with no compacted layer more than 6 inches (150 mm) thick or less than 3 inches (75 mm) thick.

2. Compact each layer of drainage course to required cross sections and thicknesses to not less than **95** percent of maximum dry unit weight according to ASTM D 698.

3.16 FIELD QUALITY CONTROL

A. Special Inspections: Owner will engage a qualified special inspector to perform inspections:

B. Testing Agency: Owner will engage a qualified geotechnical engineering testing agency to perform tests and inspections.

C. Allow testing agency to inspect and test sub grades and each fill or backfill layer. Proceed with subsequent earth moving only after test results for previously completed work comply with requirements.

D. Footing Sub grade: At footing sub grades, at least one test of each soil stratum will be performed to verify design bearing capacities. Subsequent verification and approval of other footing sub grades may be based on a visual comparison of sub grade with tested sub grade when approved by Architect.

E. When testing agency reports that sub grades, fills, or backfills have not achieved degree of compaction specified, scarify and moisten or aerate, or remove and replace soil materials to depth required; re-compact and retest until specified compaction is obtained.

3.17 PROTECTION

A. Protecting Graded Areas: Protect newly graded areas from traffic, freezing, and erosion. Keep free of trash and debris.

B. Repair and reestablish grades to specified tolerances where completed or partially completed surfaces become eroded, rutted, settled, or where they lose compaction due to subsequent construction operations or weather conditions.

C. Where settling occurs before Project correction period elapses, remove finished surfacing, backfill with additional soil material, compact, and reconstruct surfacing.

1. Restore appearance, quality, and condition of finished surfacing to match adjacent work, and eliminate evidence of restoration to greatest extent possible.

3.18 DISPOSAL OF SURPLUS AND WASTE MATERIALS

A. Remove surplus satisfactory soil and waste materials, including unsatisfactory soil, trash, and debris, and legally dispose of them off Owner's property.

END OF SECTION 312000

SECTION 321313 - CONCRETE PAVING

PART 1 - GENERAL

1.1 SUMMARY

A. Section Includes Concrete Paving for the following**:**

1. Driveways.
2. Curbs and gutters.
3. Walks.

1.2 ACTION SUBMITTALS

A. Product Data: For each type of product.

B. Samples: For each type of product, ingredient, or admixture requiring color selection.

C. Design Mixtures: For each concrete paving mixture. Include alternate design mixtures when characteristics of materials, Project conditions, weather, test results, or other circumstances warrant adjustments.

1.3 QUALITY ASSURANCE

A. Ready-Mix-Concrete Manufacturer Qualifications: A firm experienced in manufacturing ready-mixed concrete products and that complies with ASTM C 94/C 94M requirements for production facilities and equipment.

1. Manufacturer certified according to NRMCA's "Certification of Ready Mixed Concrete Production Facilities" (Quality Control Manual - Section 3, "Plant Certification Checklist").

1.4 PRECONSTRUCTION TESTING

A. Preconstruction Testing Service: Engage a qualified independent testing agency to perform preconstruction testing on concrete paving mixtures.

PART 2 - PRODUCTS

2.1 CONCRETE, GENERAL

A. ACI Publications: Comply with ACI 301 (ACI 301M) unless otherwise indicated.

2.2 STEEL REINFORCEMENT

A. Plain-Steel Welded-Wire Reinforcement: ASTM A 1064/A 1064M, fabricated from as-drawn steel wire into flat sheets.

B. Deformed-Steel Welded-Wire Reinforcement: ASTM A 1064/A 1064M, flat sheet.

C. Reinforcing Bars: ASTM A 615/A 615M, Grade 60 (Grade 420), deformed bars.

D. Joint Dowel Bars: ASTM A 615/A 615M, Grade 60 (Grade 420) plain-steel bars. Cut bars true to length with ends square and free of burrs.

E. Bar Supports: Bolsters, chairs, spacers, and other devices for spacing, supporting, and fastening reinforcing bars, welded-wire reinforcement, and dowels in place. Manufacture bar supports according to CRSI's "Manual of Standard Practice" from steel wire, plastic, or precast concrete of greater compressive strength than concrete specified.

2.3 CONCRETE MATERIALS

A. Cementitious Materials: Use the following cementitious materials, of same type, brand, and source throughout Project:

1. Portland cement: ASTM C 150/C 150M, **gray** Portland cement **Type V**.
2. Fly Ash: N/A.
3. Slag Cement: ASTM C 989/C 989M, Grade 100 or 120.
4. Blended Hydraulic Cement: ASTM C 595/C 595M **Type IL, Portland-limestone** cement.

B. Normal-Weight Aggregates: ASTM C 33/C 33M, uniformly graded. Provide aggregates from a single source.

C. Air-Entraining Admixture: ASTM C 260/C 260M.

D. Chemical Admixtures: Admixtures certified by manufacturer to be compatible with other admixtures and to contain not more than 0.1 percent water-soluble chloride ions by mass of cementitious material.

E. Color Pigment: ASTM C 979/C 979M, synthetic mineral-oxide pigments or colored water-reducing admixtures; color stable, **free of carbon black,** nonfading, and resistant to lime and other alkalis.
   1. Color: **As selected by Landscape Architect from manufacturer's full range**.

F. Water: Potable and complying with ASTM C 94/C 94M.

2.4 FIBER REINFORCEMENT

A. Synthetic Fiber: Monofilament polypropylene fibers engineered and designed for use in decorative concrete paving, complying with ASTM C 1116/C 1116M, Type III, **1/2 to 1-1/2 inches (13 to 38 mm)** long.

B. Synthetic Fiber: Fibrillated polypropylene fibers engineered and designed for use in decorative concrete paving, complying with ASTM C 1116/C 1116M, Type III, **1/2 to 1-1/2 inches (13 to 38 mm)** long.

2.5 CURING MATERIALS

A. Absorptive Cover: AASHTO M 182, **Class 3, burlap cloth made from jute or kenaf, weighing approximately 10 oz./sq. yd. (305 g/sq. m) dry or cotton mats**.

B. Moisture-Retaining Cover: ASTM C 171, polyethylene film or white burlap-polyethylene sheet.

C. Water: Potable.

D. Evaporation Retarder: Waterborne, monomolecular, film forming, manufactured for application to fresh concrete.

E. Clear, Waterborne, Membrane-Forming Curing Compound: ASTM C 309, Type 1, Class B, dissipating.

F. White, Waterborne, Membrane-Forming Curing Compound: ASTM C 309, Type 2, Class B, dissipating.

2.6 RELATED MATERIALS

A. Joint Fillers: **ASTM D 1751, asphalt-saturated cellulosic fiber or ASTM D 1752, cork or self-expanding cork** in preformed strips.

B. Slip-Resistive Aggregate Finish: Factory-graded, packaged, rustproof, nonglazing, abrasive aggregate of fused aluminum-oxide granules or crushed emery aggregate containing not less than 50 percent aluminum oxide and not less than 20 percent ferric oxide; unaffected by freezing, moisture, and cleaning materials.

2.7 CONCRETE MIXTURES

A. Prepare design mixtures, proportioned according to ACI 301 (ACI 301M), for each type and strength of normal-weight concrete, and as determined by either laboratory trial mixtures or field experience.

B. Cementitious Materials: **Use fly ash, pozzolan, slag cement, and silica fume as needed to reduce the total amount of Portland cement, which would otherwise be used, by not less than 40 percent.**][**Limit percentage, by weight, of cementitious materials other than Portland cement in concrete as follows:**]

1. Fly Ash or Pozzolan: N/A.
2. Slag Cement: 50 percent.

C. Add air-entraining admixture at manufacturer's prescribed rate to result in normal-weight concrete at point of placement having an air content as follows:

1. Air Content: 5%-8% percent plus or minus 1-1/2 percent.

D. Chemical Admixtures: Use admixtures according to manufacturer's written instructions.

E. Synthetic Fiber: Uniformly disperse in concrete mixture at manufacturer's recommended rate, but not less than **1.0 lb/cu. yd. (0.60 kg/cu. m)**.

F. Color Pigment: Add color pigment to concrete mixture according to manufacturer's written instructions and to result in hardened concrete color consistent with approved mockup.

G. Concrete Mixtures: Normal-weight concrete.

1. Compressive Strength (28 Days): **3500 psi (24.1 MPa)**.
2. Maximum W/C Ratio at Point of Placement: **0.45t ratio**.

3. Slump Limit: **4 inches (100 mm)** , plus or minus 1 inch (25 mm).

2.8 CONCRETE MIXING

A. Ready-Mixed Concrete: Measure, batch, and mix concrete materials and concrete according to ASTM C 94/C 94M **and ASTM C 1116/C 1116M**. Furnish batch certificates for each batch discharged and used in the Work.

PART 3 - EXECUTION

3.1 EXAMINATION

A. Proof-roll prepared sub base surface below **concrete walk and pads** to identify soft pockets and areas of excess yielding.

3.2 PREPARATION

A. Remove loose material from compacted sub base surface immediately before placing concrete.

3.3 EDGE FORMS AND SCREED CONSTRUCTION

A. Set, brace, and secure edge forms, bulkheads, and intermediate screed guides to required lines, grades, and elevations. Install forms to allow continuous progress of work and so forms can remain in place at least 24 hours after concrete placement.

B. Clean forms after each use and coat with form-release agent to ensure separation from concrete without damage.

3.4 STEEL REINFORCEMENT INSTALLATION

A. Comply with CRSI's "Manual of Standard Practice" for fabricating, placing, and supporting reinforcement.

3.5 JOINTS

A. General: Form construction, isolation, and contraction joints and tool edges true to line, with faces perpendicular to surface plane of concrete. Construct transverse joints at right angles to centerline unless otherwise indicated.

B. Construction Joints: Set construction joints at side and end terminations of paving and at locations where paving operations are stopped for more than one-half hour unless paving terminates at isolation joints.

C. Isolation Joints: Form isolation joints of preformed joint-filler strips abutting concrete curbs, catch basins, manholes, inlets, structures, other fixed objects, and where indicated.

D. Contraction Joints: Form weakened-plane contraction joints, sectioning concrete into areas as indicated. Construct contraction joints for a depth equal to at least one-fourth of the concrete thickness and details in the Landscape plans:

E. Edging: After initial floating, tool edges of paving, gutters, curbs, and joints in concrete with an edging tool to a **1/4-inch (6-mm)** radius. Repeat tooling of edges after applying surface finishes. **Eliminate edging-tool marks on concrete surfaces.**

3.6 CONCRETE PLACEMENT

A. Moisten sub base to provide a uniform dampened condition at time concrete is placed. Do not place concrete around manholes or other structures until they are at required finish elevation and alignment.

B. Comply with ACI 301 (ACI 301M) requirements for measuring, mixing, transporting, and placing concrete.

C. Deposit and spread concrete in a continuous operation between transverse joints. Do not push or drag concrete into place or use vibrators to move concrete into place.

D. Screed paving surface with a straightedge and strike off.

E. Commence initial floating using bull floats or darbies to impart an open-textured and uniform surface plane before excess moisture or bleed water appears on the surface. Do not further disturb concrete surfaces before beginning finishing operations or spreading surface treatments.

3.7 FLOAT FINISHING

A. General: Do not add water to concrete surfaces during finishing operations.

B. Float Finish: Begin the second floating operation when bleed water sheen has disappeared and concrete surface has stiffened sufficiently to permit

operations. Float surface with power-driven floats or by hand floating if area is small or inaccessible to power units. Finish surfaces to true planes. Cut down high spots and fill low spots. Refloat surface immediately to uniform granular texture.

1. Burlap Finish: Drag a seamless strip of damp burlap across float-finished concrete, perpendicular to line of traffic, to provide a uniform, gritty texture.
2. Medium-to-Fine-Textured Broom Finish: Draw a soft-bristle broom across float-finished concrete surface, perpendicular to line of traffic, to provide a uniform, fine-line texture.
3. Medium-to-Coarse-Textured Broom Finish: Provide a coarse finish by striating float-finished concrete surface 1/16 to 1/8 inch (1.6 to 3 mm) deep with a stiff-bristled broom, perpendicular to line of traffic.

C. Slip-Resistive Aggregate Finish: Before final floating, spread slip-resistive aggregate finish on paving surface according to manufacturer's written instructions.

1. Cure concrete with curing compound recommended by slip-resistive aggregate manufacturer. Apply curing compound immediately after final finishing.
2. After curing, lightly work surface with a steel-wire brush or abrasive stone and water to expose nonslip aggregate.

3.8 CONCRETE PROTECTION AND CURING

A. General: Protect freshly placed concrete from premature drying and excessive cold or hot temperatures.

B. Comply with ACI 306.1 for cold-weather protection.

C. Evaporation Retarder: Apply evaporation retarder to concrete surfaces if hot, dry, or windy conditions cause moisture loss approaching 0.2 lb/sq. ft. x h (1 kg/sq. m x h) before and during finishing operations. Apply according to manufacturer's written instructions after placing, screeding, and bull floating or darbying concrete but before float finishing.

D. Begin curing after finishing concrete but not before free water has disappeared from concrete surface.

E. Curing Methods: Cure concrete by **curing compound per Green Book 201-4**.

3.9 PAVING TOLERANCES

A. Comply with tolerances in ACI 117 (ACI 117M) and as follows:

1. Elevation: 3/4 inch (19 mm).
2. Thickness: Plus 3/8 inch (10 mm), minus 1/4 inch (6 mm).
3. Surface: Gap below 10-feet- (3-m-) long; unleveled straightedge not to exceed 1/2 inch (13 mm).
4. Joint Spacing: 3 inches (75 mm).
5. Contraction Joint Depth: Plus 1/4 inch (6 mm), no minus.
6. Joint Width: Plus 1/8 inch (3 mm), no minus.

3.10 REPAIR AND PROTECTION

A. Remove and replace concrete paving that is broken, damaged, or defective or that does not comply with requirements in this Section. Remove work in complete sections from joint to joint unless otherwise approved by Architect.

B. Protect concrete paving from damage. Exclude traffic from paving for at least 14 days after placement. When construction traffic is permitted, maintain paving as clean as possible by removing surface stains and spillage of materials as they occur.

C. Maintain concrete paving free of stains, discoloration, dirt, and other foreign material. Sweep paving not more than two days before date scheduled for Substantial Completion inspections.

END OF SECTION 321313

SECTION 32 84 00 - PLANTING IRRIGATION

PART 1 - GENERAL

1.1 SUMMARY

A. Section Includes: All labor, materials, supplies, tools and transportation to perform all operations in connection with and reasonably incidental to the complete installation of the automatic sprinkler irrigation systems as shown on the Drawings.

B. Drawings and general provisions of the Contract, including General and Supplementary Conditions and Division 1 Specification Sections, apply to this Section.

1.2 RELATED SECTIONS:

A. Division 26 - Electrical power to controller.

B. Division 32 – Exterior Improvements: Irrigation sleeving under paving.

1.3 REFERENCES

A. ASTM – American Society for Testing and Materials
   1. A53 – Standard Specification for Pipe, Steel, Black and Hot-Dipped, Zinc-Coated, Welded and Seamless
   2. D1785 – Standard Specification for Poly Vinyl Chloride (PVC) Plastic Pipe, Schedules 40 and 80 and Classes 200 and 315.

B. ICC – International Code Council

C. NEC – National Electric Code

D. State of California, Division of Industrial Safety
   1. Electrical Safety Orders

E. UPC – Uniform Plumbing Code

1.4 QUALITY ASSURANCE

A. OSHA Compliance:
   1. All articles and services covered by this Specification shall meet or exceed the safety standards established under the Federal Occupational Safety and Health Act of 1970, together with all amendments in effect as of the

date of this Specification.

2. The subcontractor shall erect and maintain barricades, guards, warning signs, and lights as necessary or required by OSHA regulations for the protection of the public or workmen.

B. Regulatory requirements: In addition to complying with all pertinent codes and regulations, comply with the latest rules of NEC and the Electrical Safety Orders of the State of California, Division of Industrial Safety, for all electrical work and materials. The materials and methods to be used in constructing the irrigation system shall conform to the applicable provisions of the UPC.

C. When the Specifications call for materials or construction of a better quality or larger size than required by the above-mentioned rules and regulations, the provision of the Specifications shall take precedence over the requirements of the said rules and regulations.

D. The subcontractor shall furnish without any extra charge any additional material and labor when required by the compliance with these rules and regulations, though the work be not mentioned in these particular Specifications or shown on the Drawings.

E. Any existing buildings, equipment, piping, pipe covering sewers, sidewalks, landscaping, etc., damaged by the subcontractor during the course of his work shall be replaced or repaired by the subcontractor in a manner satisfactory to the Owner's Agent and at subcontractor's own expense, and before the final payment is made. The subcontractor shall be responsible for damage caused by leaks in the piping systems being installed by him. He shall repair, at his own expense, all damage so caused, in a manner satisfactory to the Owner's Agent.

F. The subcontractor, personally or through an authorized and competent representative, shall supervise the work constantly, and shall as far as possible keep the same foreman and workmen on the job from commencement to completion. The workmanship of the entire job must in every way be first class, and only experienced and competent workmen will be allowed on the job.

G. The subcontractor shall pay for all permits, licenses, and fees required.

H. Pre-construction conference: Contractor shall schedule and conduct a conference to review in detail quality control and construction requirements for equipment, materials, and systems used to perform the work. The conference shall be scheduled not less than 10 days prior to commencement of work. All parties required to be in attendance shall be notified no later than 7 days prior

to date of conference.

1.5 SUBMITTALS

A. Materials List: Within 15 days after award of contract and prior to installation, submit six copies of materials list. Include manufacturer, model number, and description of all materials and equipment. Include sealants, cements, lubricants and other proprietary items.

B. Substitutions: Submit six copies of catalog information on materials which are to be submitted for substitution. No substitution will be permitted without prior written approval by the Architect. A complete material list shall be submitted prior to performing any work.

C. Record Drawings:
   1. The subcontractor shall maintain in good order, in the field office, one complete set of blue line prints of all irrigation drawings which form a part of the Contract, showing all water lines, sprinklers, valves, controllers and stub-outs. Any work not installed as indicated on the Drawings, shall be recorded and dimensioned accurately from the building walls on these prints. All as-built markups shall be indicated in red.
   2. All underground stub-outs for future connections and valves shall be located and dimensioned accurately from building walls on these record drawings.
   3. Upon completion of the work, obtain reproducible prints from Architect and neatly correct the prints to show the as-built conditions.

D. Controller Charts:
   1. Record Drawings shall be accepted by Architect before controller charts are prepared.
   2. Provide one controller chart for each controller supplied.
   3. Charts shall be the maximum size that the controller door will allow, showing areas covered by each controller. Chart shall be an electrostatic copy and a different color shall be used to indicate area of coverage for each station. Enlarge valve sequence to be readable when drawing is reduced.
   4. After being completed and accepted, seal by plastic laminating. Laminating sheets shall be a minimum of 10 mil thick.

E. Operations and maintenance manuals:
   1. Deliver to owner at least 10 days prior to completion of construction, 2 complete sets of the following data. Data shall be on 8 1/2 inch by 11 inch sheets, in a 3-ring binder.
      a. Index sheet stating Contractor's address and telephone number and list

of equipment with name and addresses of local manufacturer's representatives.

b. Catalog and parts sheets on all material and equipment installed under this Section.
c. Complete operating and maintenance instructions for all equipment.
d. Complete and dated manufacturer's warranties for all materials used.

2. Irrigation Maintenance Schedule to include, but not be limited to, routine inspection, adjustment, and repair of the irrigation system and its components.

1.6 LAYOUT OF WORK

A. The irrigation contractor shall stake out the irrigation system as shown on the Drawings. Stakes shall be approved by Landscape Architect before construction is started. Any changes, deletions or additions shall be determined at this check.

1.7 INSTRUCTION

A. After the system has been installed and approved, subcontractor shall instruct the Owner's representative in complete operation and maintenance of the irrigation system.

1.8 WARRANTY

A. Provide 1 year guarantee for Work of this Section.

B. Provide supplemental guarantee, on Contractor's letterhead:
1. Warrant that irrigation system has been installed according to Drawings and Specifications, and that system will be free of defects in products and installation for 1 year from Substantial Completion. Manufacturer's warranties shall only supplement special warranty.
2. Agree to repair or replace defective Work, or adjacent work which is damaged by such defects, with the exception of ordinary wear and tear, abuse or neglect. This includes damage to site improvements caused by settlement of improperly compacted trench backfill.
3. Owner reserves the right to make temporary repairs as required.

PART 2 - MATERIALS

2.1 PIPE AND FITTINGS

A. Main lines (constant pressure) 2 1/2 inch and larger shall be polyvinyl chloride

(PVC) 1120-200 PSI gasketed pipe, Type 1, and shall conform to ASTM D1784, use rubber ring seal fittings; 2 to 1½ inch shall be PVC 1120 Schedule 40 solvent weld pipe, Type 1, and shall conform to ASTM D1785. Use Schedule 40 and Schedule 80 PVC solvent weld fittings.

B. Lateral lines (non pressure) shall be 1120 Schedule 40 PVC plastic pipe Type 1, and shall conform to ASTM D1785. Use Schedule 40 PVC solvent weld fittings.

C. Metal Pipe:
   1. Steel pipe shall be Schedule 40 galvanized steel conforming to ASTM 53B. Metal pipe shall be wrapped in 2 inch wide, 20 mil thick, black PVC all weather corrosion-resistant tape with high tack adhesive. Use threaded galvanized steel fittings.
   2. Provide dielectric fittings where dissimilar metals come into contact.

D. Fittings:
   1. Solvent Weld socket fittings: Schedule 40, Type 1, Grade 1, PVC and shall conform to ASTM D2466. Schedule 80, Type 1, Grade 1 PVC and shall conform to ASTM D2467. Solvent cement and primer for PVC solvent-weld pipe and fittings shall be of type recommended by pipe manufacturer.
   2. Class 200 PSI PVC one-piece, molded rubber ring seal fittings: ASTM D1784, gaskets to conform to ASTM F477

E. Connections between main lines and remote control valves shall be of Schedule 80 PVC (threaded both ends) nipples and fittings.

F. Risers shall be as follows: Schedule 80 PVC threaded nipples and Schedule 80 PVC ells as shown on the construction details.

G. Detectable marking tape shall be 3 inch wide and consist of a minimum 5.0 mil overall thickness. The tape shall have a 20 gauge solid aluminum foil core, encapsulated within 2.55 mil polyethylene backing. Tape color shall be purple for recycled water or blue for potable water.

2.2 QUICK COUPLING VALVES

A. Quick Coupling valves shall be bronze construction, 1-inch connection, two-piece body, locking purple vinyl top, single slot and lug. Provide 1-inch single lug key and 1-inch hose swivel.

B. Quick Coupling valves shall be restrained with cast iron restrainers that attach securely to the base of the valve. Restrainers shall make contact with the hex flats of the valve and be secured by a single bolt.

2.3 GATE VALVES

A. 2 inch and smaller shall be bronze construction conforming to ASTM B 62 with screw-in bonnet, non-rising stem, operating wheel and threaded connections.

B. 2 1/2 inch and larger shall be resilient wedge cast iron conforming to ASTM A126 Class B and shall have bolted bonnet, non-rising stem, operating nut (2 inch square) and “O” ring connections for PVC plastic pipe.

2.4 BALL VALVES

A. Ball valves shall be Schedule 80 PVC full port design. PVC ball valves to be installed upstream of each remote control valve.

2.5 REMOTE CONTROL VALVES

A. Remote control valves shall be globe pattern constructed of brass or bronze and stainless steel with external manual bleed. Operating pressure shall be 15 to 200 psi and flow range shall be 5-200 gpm. All internal parts shall be removable from the top.

B. Install pressure regulating module on each remote control valve. Pressure regulating module shall be by same manufacturer as remote control valve.

C. Each valve shall have a plastic tag denoting its controller and station number.

2.6 MASTER REMOTE CONTROL VALVE

A. Master remote control valve shall be constructed of brass and shall have a brass drain cock for manual operation. Operating pressure shall be 20 to 200 psi and flow range shall be 0 gpm to 360 gpm.

B. Master Valve shall be normally closed.

2.7 FLOW SENSOR

A. Flow sensors shall be capable of sensing programmed water flows during the operation of the irrigation system and shall be capable of detecting excess or inadequate water flows as per the operator entered parameters.

B. The flow sensors shall be compatible with the irrigation controller ◊ central computer system and shall be capable of transmitting water flow information to the irrigation controller.

C. The flow sensor shall meet the following requirements:
   1. Brass or bronze construction.
   2. Insertion type with a non magnetic, spinning impeller as the only moving part.
   3. Rated for a maximum line pressure of 400 psi and a maximum liquid temperature of 200 degrees F.
   4. Accuracy of plus or minus 1 percent of full scale, linearity of plus or minus 1 percent, repeatability of plus or minus 1 percent, and a flow range of 1 to 30 feet per second.

2.8 CONTROLLERS

A. Controllers shall be as listed on the Drawings and shall have the following features:
   1. Utilize either evapotranspiration or soil moisture data for irrigation scheduling.
   2. UL listed, solid state, capable of automatic or manual operation.
   3. Non-volatile memory.
   4. Scheduling with 365 day calendar, odd/even watering, and rain delay of 1-14 days.
   5. Cycle and soak feature.
   6. Compatible with master valve and flow sensor.
   7. Hand held remote ready.

B. Controller enclosure shall be stainless steel and as listed on the Drawings.

C. Hand held remote shall be compatible with controller.

2.9 CONTROL WIRE

A. Twisted pair, solid-core, color coded with each conductor in a polyethylene jacket suitable for direct burial. Two wire path shall be Calsense approved wire only.

B. Splices shall be made with 3M Scotchcast 3570G connectors.

2.10 VALVE BOXES

A. High density polyethylene construction with UV inhibitors. Lid shall be green in color and have stainless steel bolt-down mechanism. Boxes, lids, and bolts shall be from the same manufacturer. Plastic valve boxes shall be by Carson, NDS Pro Series, or equal.

B. The lid shall be marked as follows:
   1. Remote Control Valves – “Irrigation Control Valve” or “ICV” with the station number in one inch (1”) high white enamel or heat branded numbers and letters.
   2. All other valves - “Irrigation Control Valve” or “ICV”.

C. Valve box sizes are noted on drawing details.

2.11 SPRINKLER HEADS AND BUBBLERS

A. All sprinkler heads and nozzles shall be as listed on the Drawings.

B. All pop-up sprinkler heads shall have shut-off devices, check valves, and pressure regulation built into the sprinkler head.

C. Bubblers shall be as listed on the Drawings and shall be pressure compensating.

2.12 DRIP SYSTEM

A. Provide all components required for complete system:
   1. Wye Filter: Corrosion resistant plastic housing, 1inch FIPT/MIPT connections with removable stainless steel screen and integral flush valve with hose threads. Screen shall be 155 mesh.
   2. Pressure regulator: Constructed of thermoplastic with stainless steel compression spring and securing screws. Pre-set to maintain constant outlet pressure of 30 psi.

2.13 SUBSURFACE IRRIGATION

A. Dripline tubing and pressure compensating emitters shall be extruded from linear low-density polyethylene. Tubing shall have a minimum nominal diameter of ½ inch with a minimum wall thickness of 0.045. Protection from root intrusion shall be provided by means of impregnation of non-toxic pre-emergent in pipe during the manufacturing process.

B. All accessories listed below shall be furnished by the same manufacturer as the dripline.
   1. Line Flushing Valves – the subsurface irrigation system shall utilize automatic line flush valves at the end of each independent zone area. This valve shall be capable of flushing one gallon at the beginning of each irrigation cycle. The valves shall connect directly to the dripline.
   2. Air/Vacuum Relief Valve – each independent irrigation zone shall utilize an air/vacuum relief valve at its high point. The air and vacuum relief valve

shall seal effectively from 2 to 10 psi.

2.14 BOOSTER PUMP

A. Provide and install booster pump as listed on the Drawings.

B. Contact Daryl Green at Green Product Sales for exact specification and ordering information.

2.15 BACKFLOW PREVENTION DEVICE

A. Backflow prevention device shall be the reduced pressure type with gate valves, check valves, test cocks, reduced pressure chamber, and air vent.

B. Backflow preventer enclosure shall be cold rolled steel with green powder coating, 1/8 inch wall thickness, with stainless steel hardware. Enclosure shall be removable from base without use of tools. Enclosure shall be sized to fit backflow prevention device.

C. Insulated blanket shall be constructed of polymeric resin coated polyester fabric with R-30 fiberglass insulation. Blanket shall be sized to fit backflow prevention device.

2.16 MISCELLANEOUS INSTALLATION MATERIALS

A. Solvent cement and primer for solvent weld joints shall be of make and type approved by manufacturer(s) of pipe and fittings. Cement shall be maintained at proper consistency throughout use.

B. Lubricant for assembling rubber ring seal joints shall be of make and type approved by manufacturer of pipe.

C. Pipe joint compound shall be non-hardening, non-toxic materials designed specifically for use on threaded connections in water carrying pipe. Performance shall be same as Rector Seal 100 W.

D. Drain rock: 3/4 inch washed pea gravel.

2.17 MISCELLANEOUS EQUIPMENT

A. Provide all equipment called for by the Drawings.

B. Provide to the Owner, at completion of the Maintenance Period, three (3) each of all operating and servicing keys and wrenches required for complete

maintenance and operation of all heads and valves. Include all wrenches necessary for complete disassembly of all heads and valves.

C. Provide two (2) each of quick coupler keys and hose swivels and three (3) sets of keys to both controller cabinets and enclosures.

PART 3 - INSTALLATION

3.1 PREPARATION

A. Schedule and coordinate placement of materials and equipment in a manner to effect the earliest completion of work in conformance with construction and progress schedule.

B. Contractor shall field verify the static water pressure at the project site prior to commencing work or ordering irrigation materials. If contractor fails to verify static water pressure prior to commencing work, contractor shall assume responsibility for all costs required to make system operational.

C. Examine areas and conditions under which work of this section is to be performed. Do not proceed with work until necessary conditions have been corrected.

3.2 HANDLING AND STORAGE

A. Protect work and materials from damage during construction and storage as directed by Architect.

B. Handle plastic pipe carefully; especially protecting it from prolonged exposure to sunlight.

C. Store sub-surface dripline and polyethylene tubing in cool dry place out of sunlight during installation.

3.3 LAYOUT

A. Layout work as accurately as possible in accordance with diagrammatic drawings.

B. Where site conditions do not permit location of piping, valves and heads where shown, notify Architect immediately and determine relocation in a joint conference.

C. Run pipelines and automatic control wiring in common trenches whenever practical.

3.4 EXCAVATING AND TRENCHING

A. Excavation shall be in all cases ample in size to permit the pipes to be laid at the elevations intended and to permit ample space for joining.

B. Depth of trenches shall be enough to provide minimum cover from finish grade to top of pipe in trenches, as follows:

1. 24 inch minimum cover over main lines to the control valves and quick coupling valves.
2. 24 inch minimum cover over direct burial control wires from controller to valves.
3. 12 inch minimum cover over the valve controlled lines to sprinkler heads.
4. 24 inch minimum cover over sleeves.

C. Restore surfaces, existing underground installations, etc., damaged or cut as a result of excavations, to original conditions in a manner approved by the Architect.

D. Where other utilities interfere with irrigation trenching and pipe work, adjust the trench depth as instructed by Architect.

3.5 ASSEMBLING PIPELINES

A. All pipes shall be assembled free from dirt and pipe scale. Field cut ends shall be reamed only to full pipe diameter with rough edges and burrs removed.

B. Rubber Ring Seal Joint:
1. Use a factory-made male end or prepare a field-cut male end to exact specifications of a factory-made end.
2. Carefully clean bell or coupling and insert a rubber ring without lubricant. Position the ring carefully according to the manufacturer's instructions.
3. Lubricate male end according to the manufacturer's instructions and insert male end to specified depth. Use hands only when inserting PVC pipe.
4. Thrust blocks shall be provided where necessary to resist system pressure on ring-tite pipe and fittings. Blocks shall be concrete and the size shall be based on thrust block tables.
5. Form thrust blocks in such a manner that concrete comes in contact only with the fittings. Thrust blocks shall be between solid soil and the fitting.

C. Thrust Blocking:

1. Provide thrust blocks at all changes in size or direction. Bends, reducers, plugs, and the opposite side of tee branches all require thrust blocks.
2. The size of the thrust block is determined by the working pressure, the size and type of fitting and the soil conditions at the job site. To calculate the area of contact with the soil, follow these steps:

   Calculate the total thrust by selecting thrust/100 by size and type of fitting from Table 1 and multiplying thrust/100 by system pressure divided by 100.

   Divide the total thrust by the bearing capacity of the soil in excavation (from Table 2) to determine the area (in square feet) of thrust block required to be in contact with the undisturbed soil.

TABLE 1 THRUST/100 TABLE (POUNDS PER 100 PSI)

SIZE	TEES PLUGS	90° BENDS	45° BENDS	22° BENDS
2	363	513	259	141
2 ½	531	751	379	207
3	788	1114	562	207
4	1302	1841	928	307
6	2822	3990	2012	1101

TABLE 2 SOIL BEARING CAPACITY

SOIL TYPE	SAFE BEARING LOAD LBS PER SQ FT
Soft Clay	1,000
Sand	2,000
Sand and Gravel	3,000
Sand and Gravel cemented w/ Clay	4,000
Hard Pan	10,000

The engineer is responsible for determining safe bearing loads. When doubt exists, soil bearing tests should be specified.

D. Solvent Weld Joint:
1. Prepare joint by first making sure the pipe end is square, then deburring the pipe end and cleaning the pipe and fitting of dirt.
2. Dry-insert pipe into fitting to check for missizing. Pipe should enter fitting 1/3 to 2/3 depth of socket.
3. Coat the inside socket surface of the fitting and the external surface of the male end of the pipe with P-70 primer (manufactured by Weld-On),

immediately followed by Weld-On 711 cement liberally applied to the male end of the pipe and lightly applied to the inside of the socket. Then, apply a second coat of cement to the pipe end.

4. Insert pipe immediately into fitting and turn it 90° to distribute cement and remove air bubbles. The pipe must seat to the bottom of the socket and fitting. Check alignment of the fitting. Pipe and fitting shall be aligned properly without strain to either.
5. Hold joint still for approximately thirty (30) seconds and then wipe the excess cement from the pipe and fitting.
6. Cure joint a minimum of thirty (30) minutes before handling and at least six (6) hours before allowing water in the pipe.

E. Threaded Joint:
1. Field threading of plastic pipe or fittings is not permitted. Factory-formed threads only will be permitted.
2. Factory-made nipples shall be used wherever possible. Field-cut threads in metallic pipe will be permitted only where absolutely necessary. When field threading, cut threads accurately on the axis with sharp dies.
3. All threaded joints shall be made up with pipe joint compound. Apply compound to male threads only.
4. Where assembling metallic pipe to metallic fitting or valve, no more than three (3) full threads shall show when joint is made up.
5. Where assembling to threaded plastic fitting, take up joint no more than one full turn beyond hand tightening.
6. Where assembling soft metal (brass or copper) or plastic pipe, use a strap type friction wrench only; do not use a metal-jawed wrench.

F. Cap or unplug openings as pipeline is assembled to prevent entrance of dirt or obstruction. Remove caps or plugs only when necessary to continue assembly.

G. Where pipes or control wires pass through sleeves, provide a removable non-decaying plug at ends of sleeve to prevent entrance of earth.

3.6 REMOTE CONTROL VALVES

A. Install where shown on Drawings and group together where practical. Limit one remote control valve per box with no exceptions.

B. Locate valve boxes 12 inches from and perpendicular to walk edges, buildings and walls. Provide 12 inches between valve boxes where valves are grouped together.

C. Thoroughly flush main line before installing the valve.

D. Install in shrub or ground cover areas where possible.

E. Label control line wire at each valve with a 2 ½" x 2 ¾" polyurethane I.D. tag, indicating identification number of the valve (controller and station number). Attach a label to control wire.

3.7 QUICK COUPLING VALVES

A. Install quick coupling valves on double swing-joint assemblies of Schedule 80 PVC risers and fittings.

B. Thoroughly flush main line before installing the valve.

C. Install 12 inch from hardscape areas.

3.8 VALVE BOXES

A. Install one valve box for each type of valve unless otherwise noted.

B. Install boxes 12 inches from walk or header and 12 inches apart. Short side of rectangular boxes shall be parallel to walk or header. Install 1 inch above finish grade in groundcover areas and flush with grade in lawn areas.

C. Install common bricks as shown and as required to keep box stable. Install gravel sump after compaction of all trenches.

D. Gopher Wire: Install 1/2 inch wire mesh at base of all irrigation boxes. Wrap wire mesh tightly up all sides of box for sufficient seal.

3.9 FLOW SENSOR

A. Install flow sensor a minimum of 10 times pipe diameter upstream and 5 times pipe diameter downstream of any valves, fittings, pipe bends, etc.

B. Use only sensor cable approved by the controller manufacturer. Install cable in a separate 1 inch conduit routed to controller. Leave enough flexibility in the cable to allow for future service of sensor.

3.10 SPRINKLER HEADS AND BUBBLERS

A. Thoroughly flush lines before installing heads, drip tubing, or bubblers.

B. Locate heads and bubblers as shown in the Drawings and Detail.

C. Set sprinkler heads perpendicular to grade unless otherwise shown.

D. Adjust sprinkler heads for proper distribution and trim, providing complete coverage with minimal overspray.

E. Install one tree bubbler in perforated polystyrene drainpipe filled with drain rock, flush with grade, as shown on Drawings. Provide removable cap.

F. Install lawn heads 2 inches above grade in seeded lawn area at time of installation. Lower to finish grade after turf is well established and as directed by Architect.

3.11 SUB-SURFACE IRRIGATION

A. Install per manufacturer's instructions.

B. Install dripline in a grid pattern 4 inch below finish grade.

C. Install air/vacuum relief valve at the highest point of each circuit on a line that is perpendicular to the dripline rows (exhaust header or lateral connecting dripline.) Install in 6 inch round valve box.

D. Install automatic flush valve at a point farthest away from source or along exhaust header. Install in 6 inch round valve box.

3.12 AUTOMATIC CONTROL WIRING

A. Run lines along mains where practical. Tie wires in bundles with pipe wrapping tape at 10' intervals and allow slack for contraction between strappings.

B. Loop a minimum of three (3) feet of extra wire in each valve box; both control wire and ground wire.

C. Connections shall be made as shown on plans.

D. Splicing will be permitted only on runs exceeding 2500'. Locate all splices at valve locations within valve boxes.

E. Where control lines pass under paving, they shall pass through Schedule 40 electrical PVC conduit.

F. Common wire and control wires shall be tagged with 1/4" wide embossed plastic labeling tape, showing controller and station number designation.

3.13 AUTOMATIC CONTROLLER

A. Provide and install automatic irrigation controller in approximate locations shown on Drawings. The exact location will be determined on the site by Architect. Provide conduit and wire and connect to 120 volt switch accessible to controller for ease of maintenance.

B. Connect control lines to controller in sequential arrangement according to assigned identification number of the valve. Each control line wire shall be labeled at controller with a permanent non-fading label indicating station number of the valve controlled. Attach label to control wire.

C. Contractor is responsible for programming the controller. Provide optimum amounts of water for each plant type to maintain plants in vigorous healthy condition. Reprogram as required at end of maintenance period.

D. Contact controller manufacturer for certification of the installation.

3.14 BOOSTER PUMP

A. Coordinate with electrical contractor for single phase 230 volt electrical power with 2-Pole, 49 amp breaker with ground to the booster pump location.

B. Provide a level concrete pad; size 42” x 102” x 6” thick, 1 inch above grade.

C. Install per manufacturer’s instructions.

3.15 BACKFLOW PREVENTION ASSEMBLY

A. Local codes shall govern installation requirements.

B. Install a minimum of 12 inches and a maximum of 30 inches above grade.

C. Install enclosure on concrete pad as shown on drawings.

3.16 BACKFILLING

A. Backfill only after piping has been tested, inspected and approved.

B. Backfill material shall be the earth excavated from the trenches, free from rocks, concrete chunks, and other foreign or coarse materials. Carefully select backfill that is to be placed next to plastic pipe to avoid any sharp objects which may damage the pipe.

C. All pipe under asphalt paving shall be backfilled with 4 inches of clean sand on all sides of pipe.

D. Place backfill materials in 6 inch layers and compact by jetting or tamping to a minimum compaction of 90 percent of original soil density.

E. Dress off areas to finish grades and remove excess soil, rocks or debris remaining after backfill is completed.

F. If settlement occurs along trenches, and adjustments in pipes, valves and sprinkler heads, soil, sod or paving are necessary to bring the system, soil, sod, or paving to the proper level or the permanent grade, subcontractor, as part of the work under this Contract, shall make all adjustments without extra cost to the Owner.

3.17 PIPE TESTS

A. Notify Architect at least three (3) days in advance of testing.

B. Perform testing at his own expense

C. Center load piping with a small amount of backfill to prevent arching or slipping under pressure. No fitting shall be covered.

D. Apply the following tests after weld plastic pipe joints have cured at least 24 hours.
   1. Test live (constant pressure) and quick coupling valve lines hydrostatically at 125 PSI minimum. Lines shall be filled with water and pressure gauge connected to the pipe line. After lines have reached the 125 PSI, (use hydraulic pump or other safe method – do not use an air compressor) cut off the source of pressure. Lines will be approved if test pressure (with an allowable drop of 2 PSI) is maintained for two (2) hours. Should leaks develop during the test period, they shall be located and repaired and retested in the same method. The subcontractor shall make tests and repairs as necessary until test conditions are met.
   2. Test remote control valve controlled lines with water at line pressure and visually inspect for leaks. Retest after correcting defects.

E. Pressure and Leakage Test for Gasketed Pipe.
   1. Tests shall not be conducted until 7 days have elapsed since casting of concrete thrust blocks. Ensure the release of air from the line during filling so that the pipeline is completely filled with water before testing. Pressure shall be applied by means of a hydraulic pump and measured with a test

gauge. Pressurize pipeline to 150% of the working pressure at the point of the test, but not less than 125% of highest elevation.

2. The test pressure shall be maintained (by additional pumping if necessary) for two hours. Carefully examine for leakage. All defective elements shall be replaced and the test repeated until all visable leakage has been stopped and the allowable leakage requirements have been met by not exceeding as amount determined by the following formula:

   L = (N) (D) (Square root of P)/7400

   Where

   L = allowable leakage rate in gallons/hour

   N = number of joints in test section

   D = nominal diameter of pipe in inches

   P = average test pressure

3. Test remote control valve controlled lines with water at line pressure and visually inspect for leaks. Retest after correcting defects.

F. Remake faulty joints with new materials. Do not use cement or caulking to seal leaks.

3.18 SYSTEM ADJUSTMENT

A. Adjust pressure regulating modules to proper and similar pressure to provide optimum and efficient coverage.

B. Flush and adjust sprinkler heads for optimum performance. Prevent overspray onto walks, roadways, paving and buildings. Adjust nozzle sizes and degree of arc and install pressure compensating screens as required to cover planting areas without overspray. Adjust valve flow controls.

C. Drip System Check
   1. Immediately after installation, flush lateral line piping by removing automatic flush valve.
   2. Clean filter screens. Open filter flush valve for at least 10 seconds. Clean or replace clogged elements
   3. Adjust pressure regulator to system design pressure.
   4. Verify that emitters are producing specified water output. If not, replace emitters, check filter element, check pressure at emitters, and review system for clogs and leaks. Correct deficiencies.

D. Spray and Bubbler Check
   1. Perform coverage test in the presence of Architect to establish that coverage of all planting areas is complete and adequate.
   2. Correct deficiencies and repeat test until approved.

3.19 GUARANTEE

A. It shall be the responsibility of subcontractor to fill and repair all depressions and replace all necessary lawn and planting due to the settlement of irrigation trenches for one year following completion and acceptance of the job.

B. The subcontractor shall also guarantee all materials, equipment and workmanship furnished by him to be free of all defects of workmanship and materials, and shall agree to replace at his expense, at any time within one year after installation is accepted, any and all defective parts that may be found.

3.20 CLEANUP

A. When work of this section has been completed, and at such other times as may be directed, remove all trash, debris, surplus materials and equipment from the site.

END OF SECTION 328400

SECTION 32 91 13 - SOIL PREPARATION

PART 1 - GENERAL

1.1 SUMMARY

A. Section includes planting soils specified by composition of the mixes.

B. Related Requirements:

1. Section 311000 "Site Clearing" for topsoil stripping and stockpiling.

1.2 DEFINITIONS

A. Duff Layer: A surface layer of soil, typical of forested areas, that is composed of mostly decayed leaves, twigs, and detritus.

B. Imported Soil: Soil that is transported to Project site for use.

C. Manufactured Soil: Soil produced by blending soils, sand, stabilized organic soil amendments, and other materials to produce planting soil.

D. Planting Soil: Existing, on-site soil; imported soil; or manufactured soil that has been modified as specified with soil amendments and perhaps fertilizers to produce a soil mixture best for plant growth.

E. Subgrade: Surface or elevation of subsoil remaining after excavation is complete, or the top surface of a fill or backfill before planting soil is placed.

F. Subsoil: Soil beneath the level of subgrade; soil beneath the topsoil layers of a naturally occurring soil profile, typified by less than 1 percent organic matter and few soil organisms.

G. Surface Soil: Soil that is present at the top layer of the existing soil profile. In undisturbed areas, surface soil is typically called "topsoil"; but in disturbed areas such as urban environments, the surface soil can be subsoil.

H. USCC: U.S. Composting Council.

1.3 PREINSTALLATION MEETINGS

A. Preinstallation Conference: Conduct conference at Project site.

1.4 ACTION SUBMITTALS

A. Product Data: For each type of product.

B. Samples: For each bulk-supplied material in sealed containers labeled with content, source, and date obtained; providing an accurate representation of composition, color, and texture.

C. Samples of fertilizers, organic amendment, soil conditioners, shall be submitted to the Engineer for inspection seventy-two (72) hours prior to incorporation in the work.

1.5 INFORMATIONAL SUBMITTALS

A. Field quality-control reports.

1.6 QUALITY ASSURANCE

A. Testing Agency Qualifications: An independent, state-operated, or university-operated laboratory; experienced in soil science, soil testing, and plant nutrition; with the experience and capability to conduct the testing indicated; and that specializes in types of tests to be performed.

B. Soil Analysis: If the contract documents do not include an agricultural suitability report, Contractor may, at the request of the Agency and/or construction manager (CM), after rough grading, provide for agricultural suitability testing and a written report by a qualified soil-testing laboratory. Recommendations of agricultural suitability and fertility analysis soils report, after review by Agency and/or construction manager (CM), may take precedence over these specifications.

1. The soil-testing laboratory shall oversee soil sampling. Quantity of test sites shall be determined by Agency and/or project construction manager (CM).

2. Report suitability of tested soil for plant growth.

   a. Recommendations for nitrogen, phosphorus, and potash nutrients and soil amendments to be added to produce satisfactory planting soil suitable for healthy, viable plants.

   b. Report presence of problem salts, minerals, or heavy metals; if present, provide additional recommendations for corrective action.

PART 2 - PRODUCTS

2.1 PLANTING SOILS SPECIFIED BY COMPOSITION

A. Topsoil: Topsoil shall consist of fertile, friable soil of loamy character, and shall contain an amount of organic matter normal to the area. It shall be reasonably free from weeds, refuse, roots, heavy or stiff clay, stones larger than one inch (1”) in diameter, sticks, brush, litter and other deleterious substances. Topsoil may be obtained from the site if approved by the Agency.

1. For bidding purposes, or in the event a Soils Analysis as described in Article 1.6 Paragraph B is not performed, the following amendments shall be uniformly cultivated into the upper six inches (6”), per 1000 square feet, of soil by suitable equipment operated at approximate right angles in at least two (2) directions.

   a. Nitrogen stabilized organic amendment: 4 CY

   b. 16-20-0 Ammonium phosphate: 10 LBS

   c. Agricultural Gypsum: 100 LBS

   d. Soil Sulfur: 20 LBS

B. Backfill for Plant Pits: Backfill shall be machine-mixed and approved by the Engineer prior to incorporation in planting pits. For bidding purposes, or in the event a Soils Analysis as described in Article 1.6 Paragraph B is not performed, the following amendments shall be provided

1. On-site Soil: 6 parts by volume

2. Nitrogen stabilized organic amendment 4 parts by volume

3. 16-20-0 1 pound per CY of mix

4. Iron Sulfate 2 pounds per CY of mix

5. Agricultural Gypsum 10 pounds per CY of mix

2.2 INORGANIC SOIL AMENDMENTS

A. For bidding purposes, or in the event a Soils Analysis as described in Article 1.6 Paragraph B is not performed, the following inorganic amendments shall be provided.

1. Lime: ASTM C 602, agricultural liming material containing a minimum of 80 percent calcium carbonate equivalent and as follows:

   a. Class: T, with a minimum of 99 percent passing through a No. 8 sieve and a minimum of 75 percent passing through a No. 60 sieve.

   b. Class: O, with a minimum of 95 percent passing through a No. 8 sieve and a minimum of 55 percent passing through a No. 60 sieve.

2. Sulfur: Granular, biodegradable, and containing a minimum of 90 percent elemental sulfur, with a minimum of 99 percent passing through a No. 6 sieve and a maximum of 10 percent passing through a No. 40 sieve.

3. Iron Sulfate: Granulated ferrous sulfate containing a minimum of 20 percent iron and 10 percent sulfur.

4. Perlite: Horticultural perlite, soil amendment grade.

5. Agricultural Gypsum: Minimum 90 percent calcium sulfate, finely ground with 90 percent passing through a No. 50 sieve.

6. Sand: Clean, washed, natural or manufactured, free of toxic materials, and according to ASTM C 33/C 33M.

2.3 ORGANIC SOIL AMENDMENTS

A. Nitrogen stabilized organic amendment shall be a ground or processed wood product derived from wood of redwood, fir or cedar, treated with a non-toxic agent to absorb water quickly. Nitrogen content, based on dry weight, shall be 0.5% for redwood and 0.7% for fir and cedar. Iron content, based on dry weight, shall be 0.1%.

B. Wood derivatives: Decomposed, nitrogen-treated sawdust, ground bark, or wood waste; of uniform texture and free of chips, stones, sticks, soil or toxic materials.

C. Pine sawdust is not acceptable.

2.4 FERTILIZERS

A. Fertilizers shall comply with applicable requirements of the State Agricultural Codes and shall be packaged, first grade, commercial quality products identified as to source, type of material, weight and manufacturer's guaranteed

analysis. Fertilizers shall not contain toxic ingredients in quantities harmful to human, animal, or plant life.

B. Commercial fertilizer shall be pelleted or granular product having the chemical analysis specified herein and shall be free-flowing material delivered in original unopenend containers. Use of material which becomes caked or otherwise damaged shall not be permitted.

C. Organic base fertilizer shall be a highly concentrated humate material derived from decomposed animal, fish, and vegetable matter with humic acids and trace minerals.

D. Iron sulfate shall be ferrous sulfate containing not less than twenty-one and one-half percent (21.5%) iron expressed as metallic iron.

PART 3 - EXECUTION

3.1 GENERAL

A. Place planting soil and fertilizers according to requirements in other Specification Sections.

B. Verify that no foreign or deleterious material or liquid such as paint, paint washout, concrete slurry, concrete layers or chunks, cement, plaster, oils, gasoline, diesel fuel, paint thinner, turpentine, tar, roofing compound, or acid has been deposited in planting soil.

3.2 PREPARATION OF UNAMENDED, ON-SITE SOIL BEFORE AMENDING

A. Excavation: Excavate soil from designated area(s) to a depth of 6 inches and stockpile until amended.

B. Unacceptable Materials: Clean soil of concrete slurry, concrete layers or chunks, cement, plaster, building debris, oils, gasoline, diesel fuel, paint thinner, turpentine, tar, roofing compound, acid, and other extraneous materials that are harmful to plant growth.

C. Unsuitable Materials: Clean soil to contain a maximum of 8 percent by dry weight of stones, roots, plants, sod, clay lumps, and pockets of coarse sand.

D. Screening: remove stones larger than 1 inch in diameter.

3.3 PLACING AND MIXING PLANTING SOIL OVER EXPOSED SUBGRADE

A. General: Apply and mix unamended soil with amendments on-site to produce required planting soil. Do not apply materials or till if existing soil or subgrade is muddy, or excessively wet.

B. Subgrade Preparation: Till subgrade to a minimum depth of 6 inches. Remove stones larger than 1 inch in any dimension and sticks, roots, rubbish, and other extraneous matter and legally dispose of them off Agency's property.

C. Mixing: Spread unamended soil to total depth 6 inches, but not less than required to meet finish grades after mixing with amendments and natural settlement. Do not spread if soil or subgrade is muddy, or excessively wet.

1. Amendments: Apply soil amendments and fertilizer, if required, evenly on surface, and thoroughly blend them with unamended soil to produce planting soil.

   a. Mix lime and sulfur, if required, with dry soil before mixing fertilizer.
   b. Mix fertilizer with planting soil no more than seven days before planting.

2. Lifts: Apply and mix unamended soil and amendments in lifts not exceeding 8 inches in loose depth for material compacted by compaction equipment, and not more than 4 inches in loose depth for material compacted by hand-operated tampers.

D. Compaction: Compact each blended lift of planting soil to 75 to 82 percent of maximum Standard Proctor density according to ASTM D 698 and tested in-place except where a different compaction value is indicated on Drawings.

E. Finish Grading: Grade planting soil to a smooth, uniform surface plane with loose, uniformly fine texture. Roll and rake, remove ridges, and fill depressions to meet finish grades.

3.4 PLACING MANUFACTURED PLANTING SOIL OVER EXPOSED SUBGRADE

A. General: Apply manufactured soil on-site in its final, blended condition. Do not apply materials or till if existing soil or subgrade is muddy, or excessively wet.

B. Subgrade Preparation: Till subgrade to a minimum depth of 6 inches. Remove stones larger than 1 inch in any dimension and sticks, roots, rubbish, and other extraneous matter and legally dispose of them off Agency's property.

C. Application: Spread planting soil to total depth of 6 inches, but not less than required to meet finish grades after natural settlement. Do not spread if soil or subgrade is frozen, muddy, or excessively wet.

1. Lifts: Apply planting soil in lifts not exceeding 8 inches in loose depth for material compacted by compaction equipment, and not more than 4 inches in loose depth for material compacted by hand-operated tampers.

D. Compaction: Compact each lift of planting soil to 75 to 82 percent of maximum Standard Proctor density according to ASTM D 698 except where a different compaction value is indicated on Drawings.

E. Finish Grading: Grade planting soil to a smooth, uniform surface plane with loose, uniformly fine texture. Roll and rake, remove ridges, and fill depressions to meet finish grades.

3.5 BLENDING PLANTING SOIL IN PLACE

A. General: Mix amendments with in-place, unamended soil to produce required planting soil. Do not apply materials or till if existing soil or subgrade is muddy, or excessively wet.

B. Preparation: Till unamended, existing soil in planting areas to a minimum depth 6 inches. Remove stones larger than 1 inch in any dimension and sticks, roots, rubbish, and other extraneous matter and legally dispose of them off Agency's property.

C. Mixing: Apply soil amendments and fertilizer, if required, evenly on surface, and thoroughly blend them into full depth of unamended, in-place soil to produce planting soil.

1. Mix lime and sulfur, if required, with dry soil before mixing fertilizer.
2. Mix fertilizer with planting soil no more than seven days before planting.

D. Compaction: Compact blended planting soil to 75 to 82 percent of maximum Standard Proctor density according to ASTM D 698 except where a different compaction value is indicated on Drawings.

E. Finish Grading: Grade planting soil to a smooth, uniform surface plane with loose, uniformly fine texture. Roll and rake, remove ridges, and fill depressions to meet finish grades.

3.6 FIELD QUALITY CONTROL

A. Testing Agency: The Agency will engage a qualified testing agency to perform tests and inspections.

B. Perform the following tests:

1. Compaction: Test planting-soil compaction after placing each lift and at completion using a densitometer or soil-compaction meter calibrated to a reference test value based on laboratory testing according to ASTM D 698. Space tests at no less than one for each 1000 sq. ft. of in-place soil or part thereof.

C. Soil will be considered defective if it does not pass tests.

D. Prepare test reports.

E. Label each sample and test report with the date, location keyed to a site plan or other location system, visible conditions when and where sample was taken, and sampling depth.

3.7 PROTECTION AND CLEANING

A. Protection Zone: Identify protection zones according to Section 015639 "Temporary Tree and Plant Protection."

B. Protect areas of in-place soil from additional compaction, disturbance, and contamination. Prohibit the following practices within these areas except as required to perform planting operations:

1. Storage of construction materials, debris, or excavated material.
2. Parking vehicles or equipment.
3. Vehicle traffic.
4. Foot traffic.
5. Erection of sheds or structures.
6. Impoundment of water.
7. Excavation or other digging unless otherwise indicated.

C. Remove surplus soil and waste material including excess subsoil, unsuitable materials, trash, and debris and legally dispose of them off Owner's property unless otherwise indicated.

1. Dispose of excess subsoil and unsuitable materials on-site where directed by Owner.

END OF SECTION 329113

SECTION 329200 - TURF AND GRASSES

PART 1 - GENERAL

1.1 SUMMARY

A. Section Includes:

1. Seeding.
2. Sodding.

1.2 DEFINITIONS

A. Pesticide: A substance or mixture intended for preventing, destroying, repelling, or mitigating a pest. This includes insecticides, miticides, herbicides, fungicides, rodenticides, and molluscicides. It also includes substances or mixtures intended for use as a plant regulator, defoliant, or desiccant.

B. Planting Soil: Existing, on-site soil; imported soil; or manufactured soil that has been modified with soil amendments and perhaps fertilizers to produce a soil mixture best for plant growth. See Section 329113 "Soil Preparation and drawing designations for planting soils.

1.3 PREINSTALLATION MEETINGS

A. Preinstallation Conference: Conduct conference at Project site.

1.4 INFORMATIONAL SUBMITTALS

A. Certification of grass seed.

1. Certification of each seed mixture for turfgrass sod.

2. Certification of each seed mixture for hydroseed.

B. Product certificates.

1.5 QUALITY ASSURANCE

A. Installer Qualifications: A qualified landscape Installer whose work has resulted in successful turf establishment.

1. Installer's Field Supervision: Require Installer to maintain an experienced full-time supervisor on Project site when work is in progress.
2. Personnel Certifications: Installer's field supervisor shall have certification in one of the following categories from the Professional Landcare Network:

    a. Landscape Industry Certified Technician - Exterior.
    b. Landscape Industry Certified Lawncare Manager.
    c. Landscape Industry Certified Lawncare Technician.

3. Pesticide Applicator: State licensed, commercial.

1.6 DELIVERY, STORAGE, AND HANDLING

A. Seed and Other Packaged Materials: Deliver packaged materials in original, unopened containers showing weight, certified analysis, name and address of manufacturer, and indication of compliance with state and Federal laws, as applicable.

B. Sod: Harvest, deliver, store, and handle sod according to requirements in "Specifications for Turfgrass Sod Materials" and "Specifications for Turfgrass Sod Transplanting and Installation" sections in TPI's "Guideline Specifications to Turfgrass Sodding." Deliver sod within 24 hours of harvesting and in time for planting promptly. Protect sod from breakage and drying.

PART 2 - PRODUCTS

2.1 SEED

A. Grass Seed: Fresh, clean, dry, new-crop seed complying with AOSA's "Rules for Testing Seeds" for purity and germination tolerances.

B. Seed Species:

1. Quality: State-certified seed of grass species as listed below for solar exposure.
2. Quality: Seed of grass species as listed below for solar exposure, with not less than 85 percent germination, not less than 95 percent pure seed, and not more than 0.5 percent weed seed.

C. Grass-Seed Mix: Proprietary seed mix as follows:

1. Products: Basis of Design, provide mix as indicated on the Drawings.

2.2 TURFGRASS SOD

A. Turfgrass Sod: CertifiedNumber 1 Quality/Premium, including limitations on thatch, weeds, diseases, nematodes, and insects, complying with "Specifications for Turfgrass Sod Materials" in TPI's "Guideline Specifications to Turfgrass Sodding." Furnish viable sod of uniform density, color, and texture that is strongly rooted and capable of vigorous growth and development when planted.

B. Turfgrass Species: Basis of Design, provide sod as indicated on the Drawings.

2.3 FERTILIZERS

A. Commercial Fertilizer: Commercial-grade complete fertilizer of neutral character, consisting of fast- and slow-release nitrogen, 50 percent derived from natural organic sources of urea formaldehyde, phosphorous, and potassium in the following composition:

1. Composition: 1 lb/1000 sq. ft. of actual nitrogen, 4 percent phosphorous, and 2 percent potassium, by weight.

B. Slow-Release Fertilizer: Granular or pelleted fertilizer consisting of 50 percent water-insoluble nitrogen, phosphorus, and potassium in the following composition:

1. Composition: 20 percent nitrogen, 10 percent phosphorous, and 10 percent potassium, by weight.

2.4 PESTICIDES

A. General: Pesticide, registered and approved by the EPA, acceptable to authorities having jurisdiction, and of type recommended by manufacturer for each specific problem and as required for Project conditions and application. Do not use restricted pesticides unless authorized in writing by authorities having jurisdiction.

PART 3 - EXECUTION

3.1 TURF AREA PREPARATION

A. General: Prepare planting area for soil placement and mix planting soil according to Section 329113 "Soil Preparation."

B. Reduce elevation of planting soil to allow for soil thickness of sod.

C. Moisten prepared area before planting if soil is dry. Water thoroughly and allow surface to dry before planting. Do not create muddy soil.

D. Before planting, obtain Architect's acceptance of finish grading; restore planting areas if eroded or otherwise disturbed after finish grading.

3.2 SEEDING

A. Sow seed with spreader or seeding machine. Do not broadcast or drop seed when wind velocity exceeds 5 mph.

1. Evenly distribute seed by sowing equal quantities in two directions at right angles to each other.
2. Do not use wet seed or seed that is moldy or otherwise damaged.
3. Do not seed against existing trees. Limit extent of seed to outside edge of planting saucer.

B. Sow seed at a total rate of 5 to 8 lb/1000 sq. ft.

C. Rake seed lightly into top 1/8 inch of soil, roll lightly, and water with fine spray.

D. Protect seeded areas with slopes not exceeding 1:6 by spreading straw mulch. Spread uniformly at a minimum rate of 2 tons/acre to form a continuous blanket 1-1/2 inches in loose thickness over seeded areas.

1. Anchor straw mulch by crimping into soil with suitable mechanical equipment.

E. Protect seeded areas from hot, dry weather or drying winds by applying planting soil within 24 hours after completing seeding operations. Soak areas, scatter mulch uniformly to a thickness of 3/16 inch, and roll surface smooth.

3.3 SODDING

A. Lay sod within 24 hours of harvesting. Do not lay sod if dormant or if ground is frozen or muddy.

B. Lay sod to form a solid mass with tightly fitted joints. Butt ends and sides of sod; do not stretch or overlap. Stagger sod strips or pads to offset joints in adjacent courses. Avoid damage to soil or sod during installation. Tamp and roll lightly to ensure contact with soil, eliminate air pockets, and form a smooth surface.

Work sifted soil or fine sand into minor cracks between pieces of sod; remove excess to avoid smothering sod and adjacent grass.

1. Lay sod across slopes exceeding 1:3.
2. Anchor sod on slopes exceeding 1:6 with wood pegs or steel staples spaced as recommended by sod manufacturer but not less than two anchors per sod strip to prevent slippage.

C. Saturate sod with fine water spray within two hours of planting. During first week after planting, water daily or more frequently as necessary to maintain moist soil to a minimum depth of 1-1/2 inches below sod.

3.4 TURF MAINTENANCE

A. General: Maintain and establish turf by watering, fertilizing, weeding, mowing, trimming, replanting, and performing other operations as required to establish healthy, viable turf. Roll, regrade, and replant bare or eroded areas and remulch to produce a uniformly smooth turf. Provide materials and installation the same as those used in the original installation.

B. Mow turf as soon as top growth is tall enough to cut. Repeat mowing to maintain specified height without cutting more than one-third of grass height. Remove no more than one-third of grass-leaf growth in initial or subsequent mowings.

3.5 SATISFACTORY TURF

A. Turf installations shall meet the following criteria as determined by Architect:

1. Satisfactory Seeded Turf: At end of maintenance period, a healthy, uniform, close stand of grass has been established, free of weeds and surface irregularities, with coverage exceeding 90 percent over any 10 sq. ft. and bare spots not exceeding 5 by 5 inches.
2. Satisfactory Sodded Turf: At end of maintenance period, a healthy, well-rooted, even-colored, viable turf has been established, free of weeds, open joints, bare areas, and surface irregularities.

B. Use specified materials to reestablish turf that does not comply with requirements, and continue maintenance until turf is satisfactory.

END OF SECTION 329200

SECTION 329300 - PLANTS

PART 1 - GENERAL

1.1 SCOPE OF WORK

A. Contractor shall provide all labor, materials, and equipment for the installation of plant material as indicated on the drawings and as specified herein.

1.2 COORDINATION

A. Contractor shall coordinate planting with other site improvements. Unless otherwise specified, structural improvements shall be constructed prior to planting operations.

B. Contractor shall be responsible for locating and staking existing sewer, water and utility lines above or below grade that might be damaged as a result of planting operation. Contractor shall assume sole responsibility for any cost incurred due to damage and for replacement of aforementioned utilities.

C. All work on the irrigation system, including hydrostatic and coverage tests, operational tests, and the backfilling and compaction of trenches shall be performed prior to planting operations.

1.3 PREINSTALLATION MEETINGS

A. Preinstallation Conference: Conduct conference at Project Site.

1.4 SUBMITTALS

A. When requested, Contractor shall furnish the Engineer with a delivery receipt and Certificate of Compliance stating that the material substantially meets the specifications.

B. Contractor shall provide a representative color photo of each type of plant material to be installed on the project to the Engineer for review at least four (4) weeks prior to incorporation into the work.

1.5 REPAIR and REPLACEMENT

A. Costs incurred due to repair or replacement of defective or damaged work, rejected materials, workmanship and damage to utilities or sparse turf areas shall be the responsibility of the Contractor.

B. Replacement plant material shall be of the same species, variety, size and condition as shown on the drawings and specified herein, and shall be guaranteed for one (1) full year from the date of planting

1.6 QUALITY ASSURANCE

A. Installer's Field Supervision: Require Installer to maintain an experienced full-time supervisor on Project site when work is in progress.

1. Pesticide Applicator: State licensed, commercial.

B. Provide quality, size, genus, species, and variety of plants indicated, complying with applicable requirements in ANSI Z60.1.

1.7 DELIVERY, STORAGE, AND HANDLING

A. Do not prune trees and shrubs before delivery. Protect bark, branches, and root systems from sun scald, drying, wind burn, sweating, whipping, and other handling and tying damage. Do not bend or bind-tie trees or shrubs in such a manner as to destroy their natural shape. Provide protective covering of plants during shipping and delivery. Do not drop plants during delivery and handling.

B. Handle planting stock by root ball.

C. Deliver plants after preparations for planting have been completed, and install immediately. If planting is delayed more than six hours after delivery, set plants and trees in their appropriate aspect (sun, filtered sun, or shade), protect from weather and mechanical damage, and keep roots moist.

1.8 POST INSTALLATION MAINTENANCE PERIOD

A. Provide post installation maintenance as prescribed herein.

1. Contractor shall provide all labor, materials, equipment and incidentals to perform work during the Post-Installation Maintenance Period, as specified herein, including but not limited to; litter removal, drain cleaning, hardscape sweeping, adequate watering of plant materials, mowing,

fertilizing, replacing unsuitable plant material and controlling weeds, rodents and other pests.

2. Shall commence on the first day after the completion of planting.

3. Maintenance during Plant Establishment shall include eradicating weeds, eradicating insects and diseases, and protecting areas from traffic, watering, and erosion.

4. Contractor shall maintain the project on a continuous basis for ninety (90) calendar days. Areas shall be so cared for as to present a neat and clean condition at all times.

5. Working days when the Contractor fails to adequately perform maintenance operations as specified herein will not be credited as time of Post-Installation Maintenance Period.

6. Post-Installation Maintenance Period may be extended by the Engineer if the Project is improperly maintained, appreciable replacement is required, or other corrective work becomes necessary.

7. Contractor shall schedule a monthly walkthrough inspection five (5) calendar days prior to the first thirty (30) calendar days. This notification and inspection time should continue for the duration of the maintenance period until acceptance of the work. Contractor shall correct deficiencies before the next monthly walkthrough or maintenance period shall be extended accordingly.

8. At the end of the Post-Installation Maintenance Period, all areas shall be in a weed-free condition.

B. Specialty Type Operations

1. Notification shall be given to the Agency seventy-two (72) hours prior to the Contractor performing “specialty-type” operations, including but not limited to; fertilization, chemical weed abatement and turf aerification, de-thatching and fungicide applications.

2. Contractor shall apply spray chemicals when air currents are still; preventing drifting onto adjoining property and preventing toxic exposure to persons whether or not they are in, or near, the project.

C. Protection

1. Contractor shall be responsible for fencing and maintaining adequate protection of the site. Costs incurred due to damage or replacement shall be the responsibility of the Contractor.

D. Public Interface

1. Contractor shall be responsible for fencing and maintaining adequate protection of the site. Costs incurred due to damage or replacement shall be the responsibility of the Contractor.

E. Repair and Replacement

1. Dead or dying container plant material shall be immediately replaced with material of the same species and size and guaranteed as described in these specifications.

2. Costs incurred due to repair or replacement of irrigation equipment shall be the responsibility of the Contractor. Replacement parts shall be identical to the material specified herein and on the drawings.

PART 2 - PRODUCTS

2.1 CONTAINER GROWN PLANT MATERIAL QUALITY

A. Plant material shall be in accordance with the California State Department of Agriculture's regulations for nursery inspections, rules and grading. All plants shall be of No. 1 Grade and have a normal habit of growth, and shall be sound, healthy, vigorous and free of insect infestations, plant diseases, sun scalds, fresh bark abrasions or other objectionable disfigurements. All plants shall have a normal, well-developed branch system and vigorous and fibrous root system which are not pot bound and are free of kinked or girdling roots.

2.2 CONTAINER GROWN PLANT MATERIAL

A. Nursery grown stock shall be selected from high quality, well-shaped stock, grown under climatic conditions similar to those in the project locale. Minimum acceptable size of plants specified shall correspond with that normally expected for the species and variety of commercially available nursery stock.

B. Caliper shall be the diameter of the trunk one foot (1') above the ground surface and shall be the determining measurement for trees when specified.

C. Oversize plants may be used if not root bound, but shall not increase the Contract price. Up to ten percent (10%) of undersize plants in any one (1) variety and grade may be used; provided they are larger than the average size of the next smaller grade.

D. Scientific and common names conform to customary nursery usage, Hortus Third, or the Checklist of Woody Ornamental Plants of California, Oregon, and Washington.

E. Types, sizes and quantities of plant materials shall be as indicated on the drawings. The plant list shown on the drawings shall be used as a guide only; Contractor shall verify quantities by Contractor's own plan check.

F. The Engineer reserve the right to refuse or reject any unsuitable plant material. Unsuitable plants shall be removed from the project site and replaced at the Contractor's expense. New plants shall be the same species, variety, size and condition as specified.

G. Pruning of plant materials shall not be done prior to delivery. After planting, as directed by the Engineer, pruning shall be limited that which is necessary to remove injured twigs and branches, deadwood, and suckers.

H. Plant material specified is subject to substitution based upon availability. Substituted materials shall be approved in advance by the Engineer and shall conform to the requirements of those originally specified and be supplied by the Contractor.

2.3 WOOD MULCH

A. Wood mulch shall be a ground or processed wood product derived from fir or cedar, or from the bark of fir or pine, free of stones, sticks, and toxic substances harmful to plants and stabilized with nitrogen.

2.4 WEED-CONTROL BARRIERS

A. Nonwoven Geotextile Filter Fabric, if required: Polypropylene or polyester fabric, 3 oz./sq. yd. minimum, composed of fibers formed into a stable network so that fibers retain their relative position. Fabric shall be inert to biological degradation and resist naturally encountered chemicals, alkalis, and acids.

2.5 PESTICIDES

A. General: Pesticide registered and approved by the Environmental Protection Agency (EPA), acceptable to authorities having jurisdiction, and of type recommended by manufacturer for each specific problem and as required for Project conditions and application. Do not use restricted pesticides unless authorized in writing by authorities having jurisdiction.

2.6 POST INSTALLATION MAINTENANCE

A. Fertilizer: Provide fertilizer as specified in Fertilizer Article.

PART 3 - EXECUTION

3.1 MATERIAL DELIVERY AND INSPECTION

A. Plant material shall be delivered with legible identification labels, handled and stored adequately to maintain a healthy condition. They shall be protected from drying out, windburn or any other injury. Container plant material shall not be picked up by stems or trunks.

B. Inspection of plant materials required by County of Orange along with State or Federal authorities shall be the responsibility of the Contractor. Secure any permits or certificates, if required by the jurisdiction having authority, prior to delivery of plants to project site.

C. Plants shall be inspected and approved by the Engineer, at the Contractor's source prior to delivery to the project site and until acceptance of the work, for size, variety, condition, latent defects and injuries. Engineer to provide acceptance letter to the Agency after delivery of the plant material to the project site.

3.2 FINISH GRADING

A. Finish grading shall be completed prior to weed abatement operations. The Agency, at its own expense, may conduct a soils test at the completion of grading operations. See Section 31 20 00 for additional grading requirements.

3.3 WEED ABATEMENT OPERATIONS

A. The irrigation system, soil preparation operations, and finish grade shall be approved by the Engineer prior to weed abatement operations.

B. Contractor shall operate the irrigation system to keep planting areas uniformly moist for a period of two (2) weeks (14 calendar days). At the end of the two (2) week period, Contractor shall spray all visible weeds with an approved non-selective, post emergent herbicide. Application rate and method shall be recommended by the manufacturer. After spraying, planting areas shall remain unwatered for a minimum of forty-eight (48) hours.

C. After seven (7) calendar days from the chemical application, weeds and debris shall be disposed of off-site.

D. Contractor shall apply spray chemicals when air currents are still; preventing drifting onto adjoining property and preventing any toxic exposure to persons whether or not they are in or near the project.

E. After weed abatement operations, and as determined by the Engineer, planting areas shall be scarified to a depth not to exceed one inch (1”). The Engineer shall approve weed abatement operations prior to hyrdroseeding, if applicable.

F. Weeds and debris shall be disposed of off-site.

3.4 INSTALLATION OF CONTAINER GROWN PLANT MATERIAL

A. Plant trees, shrubs, and ground cover as indicated on the drawings and specified herein as soon as the site and weather conditions are suitable.

B. Planting operations shall be performed only during periods when beneficial results can be obtained. When drought, excessive moisture or other unsatisfactory conditions prevail, the work shall be suspended. When special conditions warrant a variance to the planting operations proposed planting times shall be submitted to and approved by the Engineer.

C. Install trees before turf is installed, if applicable.

D. Stake plant locations and secure approval from the Engineer before excavating pits, making necessary adjustments as requested by the Engineer.

E. Excavated pits shall have vertical, roughened sides, and uncompacted bottoms. Glazed surfaces created by using an auger shall be scarified. Dust sides of pits with gypsum before backfilling.

F. Plants shall be set plumb and held into position until sufficient soil/backfill has been firmly placed around roots or ball. Container-grown material shall be installed such that the collars of the plants are slightly higher than immediate adjacent grades.

G. Containers shall be opened and removed in such a manner that the plant root ball is not injured. Non-biodegradable containers of platforms shall be removed without damage to the plant or root system. Biodegradable containers shall be split.

H. Test for percolation shall be done to determine positive drainage of plant pits. The Engineer shall be notified of all soil and drainage conditions detrimental to growth of plant material. Contractor shall submit proposal for correcting the condition.

I. Trees shall be staked at time of planting as indicated on the drawings.

J. Unsuitable soil encountered in excavation shall be disposed of off-site and acceptable soil shall be provided.

K. Water all planting areas thoroughly after installation of plant materials. Additional backfill shall be added to fill voids caused by water settlement.

L. Inspection of all planting shall be made at the end of the construction to establish the time for the beginning of the Post-Installation Maintenance Period.

M. Except in turf areas, plants shall be set in a temporary watering basin as indicated on the drawings.

N. Areas around the plants shall be regarded to indicated finish grade.

3.5 PLANTING AREA MULCHING

A. Mulch backfilled surfaces of planting areas and other areas indicated.

1. Mulch in Planting Areas: Apply thickness as indicated on drawings of mulch over whole surface of planting area, and finish level with adjacent finish grades. Do not place mulch within 6 inches of trunks or stems.

3.6 POST INSTALLATION MAINTENANCE PERIOD

A. Weed Control.

1. Before weeds exceed two inches (2”) in height, they shall be removed and disposed of off-site. Serious weed pests (i.e. blackberry, nut sedge or bind weed) shall be sprayed with an approved non-selective, post-emergent herbicide and left in place for seven (7) calendar days. Application rate and method shall be as recommended by the manufacturer. As determined by the Engineer, a second application shall be made seven (7) days after the first application. With both applications, areas sprayed shall remain unwatered for a minimum of forty-eight (48) hours. Dead weeds shall be removed seven (7) calendar days after second application and disposed of off-site.

2. If the Engineer notifies the Contractor of failure to control weeds as specified herein, the Contractor shall kill all weeds within ten (10) calendar days of such notification. The Post-Installation Maintenance Period will be extended for every day after ten (10) calendar days until such weeds have been killed.

B. Irrigation System.

1. Contractor shall operate the irrigation system automatically and shall properly and completely maintain all parts of the irrigation system during both the Post-Installation Maintenance Period.

2. Contractor shall adjust irrigation system to deliver water in sufficient quantities to maintain plant material in a healthy condition and adjust water application to compensate for seasonal conditions.

3. Irrigation system is designed for watering five (5) days a week, 11 p.m. to 4 a.m. with even distribution.

C. Trees and Shrubs.

1. Installed plants shall be maintained in a healthy growing condition. Maintenance operations shall begin immediately after each plant is installed and shall continue until the post-installation maintenance period commences. This maintenance shall include, but not be limited to: watering, pruning, wound dressing, straightening, and other industry-related, customary and necessary procedure for healthy and vigorous growth. Plant beds and earth saucers shall be kept free of weeds, grass, and other undesirable vegetation. Plants shall be checked for settlement and shall be reset at proper grade as necessary. Run-off, puddling, and wilting shall be prevented.

2. Fifteen (15) calendar days after the beginning of the Post-Installation Maintenance Period, container plant material as part of the Contract shall

be fed with a commercial fertilizer at rates recommended by the manufacturer. No fertilizer shall be applied directly at the crown and/or during the months of September through February.

3. Dead or dying plant material shall be immediately replaced with material of the same species and size and guaranteed as described in these specifications.

4. Trees planted as part of the Contract shall be pruned or headed back, as requested by the Engineer, to eliminate diseased or damaged growth, reduce the risk of toppling or wind damage, maintain growth within space limitations, maintain natural appearance, and to balance the crown with the root structure.

5. Staking of trees shall be checked frequently for damage, and to prevent chafing and girdling. Costs incurred due to damage or replacement of staking materials shall be the responsibility of the Contractor.

6. Contractor shall provide a clearance of not less than seven feet (7') in height over walks, slabs and active play areas, and not less than fourteen feet (14') in height over roadways.

7. As approved by the Engineer, all wounds over one and one-half inch (1 ½") in diameter may be sealed with a tree seal.

3.7 GUARANTEE

A. Contractor shall guarantee new trees through one (1) full year after the date of acceptance of the work.

END OF SECTION 329300

SECTION 329310 – NON VEGETATIVE SITE MATERIALS

PART 1 - GENERAL

1.1 SCOPE OF WORK

A. Contractor shall provide all labor, materials, tools, equipment, and incidentals for establishing subgrade, ensuring flow lines are maintained, performing weed abatement operations and furnishing, loading, hauling, and placing non-vegetative surface or subbase materials as indicated on the drawings and specified herein.

1.2 MATERIAL SAMPLES

A. Contractor shall submit samples of materials to the Engineer for review and approval prior to purchase and installation.

1.3 QUALITY MEASUREMENT

A. Quantities of non-vegetative surface materials will be as measured in place and compensated for at the Contract unit prices bid.

B. Quantities of non-vegetative subsurface materials shall be as indicated in the unit price bid for the various item of work.

1.4 PROTECTION

A. Contractor shall provide all necessary protection to prevent injury to humans, animals, or adjacent plant life and property occasioned by application of weed abatement materials or soil sterilent for decomposed granite.

B. Contractor will be held responsible for all personal injury or property damage caused by application or storage of such materials.

PART 2 - PRODUCTS

2.1 DECOMPOSED GRANITE

A. Decomposed granite shall be the product of crushing rock or gravel; clean, hard, sound durable, uniform in quality, and free of any detrimental quantity of

soft, friable, think elongated or laminated pieces, disintegrated material, organic matter, oil or other deleterious material.

B. B. Color shall be as indicated on the drawings. Contractor shall submit a sample to Engineer prior to purchase of material.

C. C. Soil sterilent for decomposed granite areas shall be Lacco-Bor by Los Angeles Chemical Company, Spike 8OW by Elanco Products, Poly-Bor-Chlorate by United States Borox and Chemical Corporation, or an approved equal.

D. D. Soil stabilizer, if applicable, for decomposed granite areas shall be Polypavement by Polypavement (323-954-2240), Soil Secure by Southwest Boulder & Stone (800-540-1147), or approved equal.

PART 3 - EXECUTION

3.1 INSTALLATION

A. Contractor shall furnish and place decomposed granite on compacted and sterilized subgrade in areas as indicated on the drawings and according to the details.

B. If applicable, thoroughly blend the stabilizer into the decomposed granite by mechanical means per manufacturer's recommendations.

C. Prior to placing the decomposed granite surfacing, the subgrade shall be cleaned of all foreign substances. Ruts or soft, yielding spots that may appear in subgrade, areas having inadequate compaction, and deviations of the surface from requirements set forth therein shall be corrected by loosening, removing, and by adding approved material, reshaping to line and grade, and recompacting to specified density requirements and as approved by the Engineer.

D. Soil sterilent shall be applied per manufacturer's recommendation and applied by or under the direct supervision of someone holding a State of California Qualified Application Certificate.

E. Material shall be level to a uniform thickness so that the layer, after compaction, will not be less than the indicated thickness.

F. Decomposed granite shall be compacted to at least eighty-five (85%) of maximum density obtainable and shall be hyrdoseeded as turf.

G. Finish surface shall not vary more than two one-hundredths foot (0.02') from required grades adjacent to both paved and unpaved areas.

H. Adjustments shall be made in placing, spreading, or finishing procedures as may be directed by the Engineer to obtain a uniform layer thickness and true grades, to minimize segregation and degradation where pertinent, to reduce or increase water content, and to insure a satisfactory course.

I. Materials found unsatisfactory shall be replaced or reworked at the Contractor's expense to produce satisfactory material.

3.2 GUARANTEE

A. Contractor shall guarantee new trees through one (1) full year after the date of acceptance of the work.

END OF SECTION 329310

SECTION 329320 – SITE FURNITURE AND AMENITIES

PART 1 - GENERAL

1.1 SCOPE OF WORK

A. Contractor shall provide all labor, materials, tools, equipment, and incidentals to furnish, assemble and install Site Furniture and Amenities as indicated on the drawings and specified herein, including but not limited to excavation and backfilling, fine grading, footings, painting, and related appurtenances.

1.2 SUBMITTALS

A. Within fifteen (15) calendar days after award of Contract and at least thirty (30) days prior to installation, Contractor shall submit shop drawings or manufacturer's cut sheets to the Agency in triplicate. One (1) set will be returned to the Contractor.

1.3 SUBSTITUTIONS

A. No substitution for Site Furniture and Amenities will be considered which is based on material delivery schedules, fabrication by Contractor, manufacturer carrying less than $1,000,000 product liability insurance or wood members of a different species, quality, or dimension.

1.4 REPAIR AND REPLACEMENT

A. A. Method of repair to damaged finished surfaces shall be as approved by the Agency and shall match the original finish.

B. B. Costs incurred for repair or replacement of defective or damaged work, rejected materials or workmanship shall be the responsibility of the Contractor.

PART 2 - PRODUCTS

2.1 Basis of design products shall be provided per drawings:

A. Trash Receptacle

B. Dog-I-Pot

C. Drinking Fountain

D. Humming Bird Bench

E. Dragonfly Bench

F. Picnic Table

G. Lodge Pole Fence

H. Monument Sign Logo Replacement

I. Birdhouse

J. Bench

K. Interpretive Sign

L. Pedestrian Bridge and Abutment

M. Entry Overhead Structure

PART 3 - EXECUTION

3.1 INSTALLATION

A. Contractor shall install all Site Furniture and Amenities in accordance with the manufacturer's recommendations for each item of work and as indicated on the drawings and specified herein.

B. Staked locations for Site Furniture and Amenities shall be approved by the Agency prior to digging for footings or installation.

C. Metal components, connections and fastenings shall be free of any burrs or sharp points and edges.

3.2 LODGEPOLE POST FENCE

A. Portions of wood posts which are to be embedded in earth or concrete shall be brushed before installation with two (2) coats of a non-toxic ceramic coal tar composition which has rust inhibiting chemical in a water base of homogeneous consistency approved by the Owner. Applications shall extend one inch (1") above finish grade. Spraying will not be permitted.

END OF SECTION 329320

APPENDIX A
STRUCTURAL CALCULATIONS

Structural Calculations

Village Pond Park

Lake Forest, CA

Submitted to:
Department of Building and Safety
City of Lake Forest, CA

REGISTERED PROFESSIONAL ENGINEER
AFSHIN GHODSI
SE 3248
EXP 3/31/
STRUCTURAL
STATE OF CALIFORNIA

Date 07-13-2015

Job No. 15-S012

Englekirk

STRUCTURAL ENGINEERS

3621 Harbor Boulevard, Suite 125
Santa Ana, CA 92704

714.557.8551 T
714.557.5530 F

www.englekirk.com

These calculations are reproduced here only for submittal to the governing building authority to assist in obtaining a building permit. Any reproduction or distribution is expressly forbidden. Any calculations without a cover sheet, wet stamp, and signature are unauthorized and cannot be used for any purpose. Computations involving scientific principle only serve as a guide for the experienced engineer and to assist in making engineering decisions. The final design is reflected only in the construction documents.

Village Pond Park
Lake Forest, California

TABLE OF CONTENTS

JOB NUMBER: 15-S012

Entry Overhead Structure

- Steel Arch Design.....1 - 8
- Pilaster and Footing Design .....9 – 15
- Connection of Steel Post to Pilaster.....16
- Details .....17 – 21

Light Poles

- 14' Light Pole Footing Design .....22 - 31
- Details 32

DL ON ARCH BEAM :

$33' \times 2 \times 30 + 25 \times 10' \times 20 = 6980 \simeq 7000$ lb

plf # OF LATTICE

DL ON EACH POST $= 7000/4 = 1750$ lb

SEISMIC LOAD

$F_{px} = \frac{0.4 a_p S_{DS} W_p}{R_p / I_p} (1 + 2 z/h)$ (ASCE 7-10 13.3-1)

$S_{DS} = 0.982g$

$a_p = 2.5$ $R_p = 2.5$ $I_p = 1$

$F_{px} = \frac{0.4 \times 2.5 \times 0.982 \times 7000}{2.5} \times 3 = 8250$ kips $< 1.6 S_{DS} I_p W_p$ o.k

$> 0.3 S_{DS} I_p W_p$ o.k

FOR EACH post $= 8250/4 = 2063$ lb

$F_{p\,service} = 2063/1.4 = 1475$ lb

USGS Design Maps Summary Report

2

User-Specified Input

Building Code Reference Document ASCE 7-10 Standard
(which utilizes USGS hazard data available in 2008)

Site Coordinates 33.62619°N, 117.70738°W

Site Soil Classification Site Class D – "Stiff Soil"

Risk Category I/II/III

USGS-Provided Output

S_S =	1.473 g	S_{MS} =	1.473 g	S_{DS} =	0.982 g
S_1 =	0.548 g	S_{M1} =	0.823 g	S_{D1} =	0.548 g

For information on how the SS and S1 values above have been calculated from probabilistic (risk-targeted) and deterministic ground motions in the direction of maximum horizontal response, please return to the application and select the "2009 NEHRP" building code reference document.

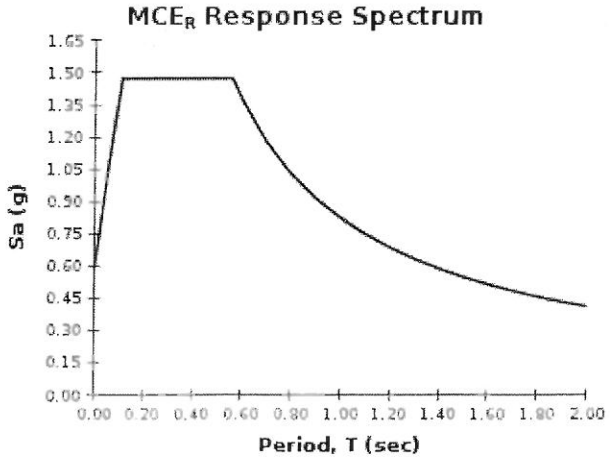

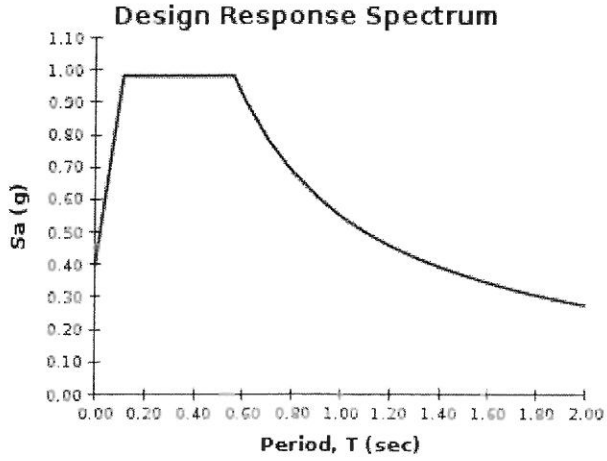

For PGA_M, T_L, C_{RS}, and C_{R1} values, please view the detailed report.

Steel Column

Lic. # : KW-06009801 **Licensee : ENGLEKIRK**

Description : Steel Archway

Code References

Calculations per AISC 360-10, IBC 2012, CBC 2013, ASCE 7-10
Load Combinations Used : ASCE 7-10

General Information

Steel Section Name :	**HSS8x8x3/8**	Overall Column Height	6.0 ft
Analysis Method :	Load Resistance Factor	Top & Bottom Fixity	Top & Bottom Pinned
Steel Stress Grade		Brace condition for deflection (buckling) along columns :	
Fy : Steel Yield	36.0 ksi	X-X (width) axis :	
E : Elastic Bending Modulus	29,000.0 ksi	Unbraced Length for X-X Axis buckling = 6.0 ft, K = 2	
Load Combination :	ASCE 7-10	Y-Y (depth) axis :	
		Unbraced Length for Y-Y Axis buckling = 6.0 ft, K = 2	

Applied Loads

Service loads entered. Load Factors will be applied for calculations.

Column self weight included : 225.685 lbs * Dead Load Factor
AXIAL LOADS . . .
Axial Load at 6.0 ft, D = 1.750 k
BENDING LOADS . . .
Lat. Point Load at 6.0 ft creating My-y, E = 1.475 k

DESIGN SUMMARY

Bending & Shear Check Results

PASS Max. Axial+Bending Stress Ratio = **0.009196** : 1

Load Combination	+1.40D+1.60H
Location of max.above base	0.0 ft
At maximum location values are . . .	
Pu	2.766 k
0.9 * Pn	300.777 k
Mu-x	0.0 k-ft
0.9 * Mn-x :	79.380 k-ft
Mu-y	0.0 k-ft
0.9 * Mn-y :	79.380 k-ft

PASS Maximum Shear Stress Ratio = **0.01876** : 1

Load Combination	+1.20D+0.50L+0.20S+E+1.60H
Location of max.above base	6.0 ft
At maximum location values are . . .	
Vu : Applied	1.475 k
Vn * Phi : Allowable	78.622 k

Maximum SERVICE Load Reactions . .

Top along X-X	1.475 k
Bottom along X-X	0.0 k
Top along Y-Y	0.0 k
Bottom along Y-Y	0.0 k

Maximum SERVICE Load Deflections . . .

Along Y-Y 0.0 in at 0.0 ft above base
for load combination :

Along X-X 0.0 in at 0.0 ft above base
for load combination :

Load Combination Results

Load Combination	Maximum Axial + Bending Stress Ratios: Stress Ratio	Status	Location	Maximum Shear Ratios: Stress Ratio	Status	Location
+1.40D+1.60H	0.009	PASS	0.00 ft	0.000	PASS	0.00 ft
+1.20D+0.50Lr+1.60L+1.60H	0.008	PASS	0.00 ft	0.000	PASS	0.00 ft
+1.20D+1.60L+0.50S+1.60H	0.008	PASS	0.00 ft	0.000	PASS	0.00 ft
+1.20D+1.60Lr+0.50L+1.60H	0.008	PASS	0.00 ft	0.000	PASS	0.00 ft
+1.20D+1.60Lr+0.50W+1.60H	0.008	PASS	0.00 ft	0.000	PASS	0.00 ft
+1.20D+0.50L+1.60S+1.60H	0.008	PASS	0.00 ft	0.000	PASS	0.00 ft
+1.20D+1.60S+0.50W+1.60H	0.008	PASS	0.00 ft	0.000	PASS	0.00 ft
+1.20D+0.50Lr+0.50L+W+1.60H	0.008	PASS	0.00 ft	0.000	PASS	0.00 ft
+1.20D+0.50L+0.50S+W+1.60H	0.008	PASS	0.00 ft	0.000	PASS	0.00 ft
+1.20D+0.50L+0.20S+E+1.60H	0.008	PASS	0.00 ft	0.019	PASS	6.00 ft
+0.90D+W+0.90H	0.006	PASS	0.00 ft	0.000	PASS	6.00 ft
+0.90D+E+0.90H	0.006	PASS	0.00 ft	0.019	PASS	6.00 ft

Steel Column

Lic. # : KW-06009801 **Licensee : ENGLEKIRK**

Description : Steel Archway

Maximum Reactions

Note: Only non-zero reactions are listed.

Load Combination	X-X Axis Reaction @ Base	X-X Axis Reaction @ Top	Y-Y Axis Reaction @ Base	Y-Y Axis Reaction @ Top	Axial Reaction @ Base
+D+H		k		k	1.976 k
+D+L+H		k		k	1.976 k
+D+Lr+H		k		k	1.976 k
+D+S+H		k		k	1.976 k
+D+0.750Lr+0.750L+H		k		k	1.976 k
+D+0.750L+0.750S+H		k		k	1.976 k
+D+0.60W+H		k		k	1.976 k
+D+0.70E+H		1.033 k		k	1.976 k
+D+0.750Lr+0.750L+0.450W+H		k		k	1.976 k
+D+0.750L+0.750S+0.450W+H		k		k	1.976 k
+D+0.750L+0.750S+0.5250E+H		0.774 k		k	1.976 k
+0.60D+0.60W+0.60H		k		k	1.185 k
+0.60D+0.70E+0.60H		1.033 k		k	1.185 k
D Only		k		k	1.976 k
Lr Only		k		k	k
L Only		k		k	k
S Only		k		k	k
W Only		k		k	k
E Only		1.475 k		k	k
H Only		k		k	k

Maximum Deflections for Load Combinations

Load Combination	Max. X-X Deflection		Distance		Max. Y-Y Deflection		Distance	
+D+H	0.0000	in	0.000	ft	0.000	in	0.000	ft
+D+L+H	0.0000	in	0.000	ft	0.000	in	0.000	ft
+D+Lr+H	0.0000	in	0.000	ft	0.000	in	0.000	ft
+D+S+H	0.0000	in	0.000	ft	0.000	in	0.000	ft
+D+0.750Lr+0.750L+H	0.0000	in	0.000	ft	0.000	in	0.000	ft
+D+0.750L+0.750S+H	0.0000	in	0.000	ft	0.000	in	0.000	ft
+D+0.60W+H	0.0000	in	0.000	ft	0.000	in	0.000	ft
+D+0.70E+H	0.0000	in	0.000	ft	0.000	in	0.000	ft
+D+0.750Lr+0.750L+0.450W+H	0.0000	in	0.000	ft	0.000	in	0.000	ft
+D+0.750L+0.750S+0.450W+H	0.0000	in	0.000	ft	0.000	in	0.000	ft
+D+0.750L+0.750S+0.5250E+H	0.0000	in	0.000	ft	0.000	in	0.000	ft
+0.60D+0.60W+0.60H	0.0000	in	0.000	ft	0.000	in	0.000	ft
+0.60D+0.70E+0.60H	0.0000	in	0.000	ft	0.000	in	0.000	ft
D Only	0.0000	in	0.000	ft	0.000	in	0.000	ft
Lr Only	0.0000	in	0.000	ft	0.000	in	0.000	ft
L Only	0.0000	in	0.000	ft	0.000	in	0.000	ft
S Only	0.0000	in	0.000	ft	0.000	in	0.000	ft
W Only	0.0000	in	0.000	ft	0.000	in	0.000	ft
E Only	0.0000	in	0.000	ft	0.000	in	0.000	ft
H Only	0.0000	in	0.000	ft	0.000	in	0.000	ft

Steel Section Properties : HSS8x8x3/8

Steel Column

Lic. # : KW-06009801 Licensee : ENGLEKIRK

Description : Steel Archway

Steel Section Properties : HSS8x8x3/8

Depth	=	8.000 in	I xx	=	100.00 in^4	J	=	160.000 in^4
			S xx	=	24.90 in^3			
Width	=	8.000 in	R xx	=	3.100 in			
Wall Thick	=	0.375 in	Zx	=	29.400 in^3			
Area	=	10.400 in^2	I yy	=	100.000 in^4	C	=	40.700 in^3
Weight	=	37.614 plf	S yy	=	24.900 in^3			
			R yy	=	3.100 in			

Ycg = 0.000 in

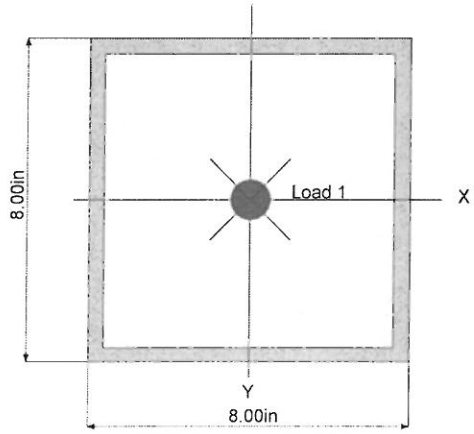

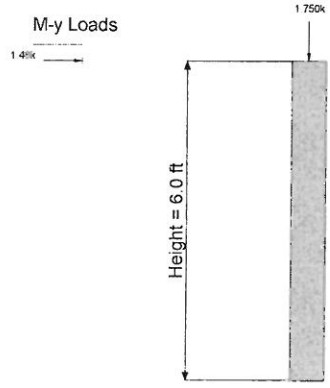

Loads are total entered value. Arrows do not reflect absolute direction.

ARCHWAY BEAM

Description : Archway beam

Code References

Calculations per AISC 360-10, IBC 2012, CBC 2013, ASCE 7-10
Load Combinations Used : ASCE 7-10

General Information

Steel Section Name : **HSS12x3-1/2x3/8**
Analysis Method : Load Resistance Factor
Steel Stress Grade
Fy : Steel Yield 36.0 ksi
E : Elastic Bending Modulus 29,000.0 ksi
Load Combination : ASCE 7-10

Overall Column Height 33.0 ft
Top & Bottom Fixity Top & Bottom Pinned
Brace condition for deflection (buckling) along columns :
X-X (width) axis :
Unbraced Length for X-X Axis buckling = 12 ft, K = 1.0
Y-Y (depth) axis :
Unbraced Length for Y-Y Axis buckling = 12 ft, K = 1.0

Applied Loads

Service loads entered. Load Factors will be applied for calculations.

BENDING LOADS . . .
Lat. Uniform Load creating Mx-x, E = 0.1250 k/ft
Lat. Uniform Load creating My-y, D = 0.110 k/ft

DESIGN SUMMARY

Bending & Shear Check Results

PASS Max. Axial+Bending Stress Ratio = 0.6569 : 1
Load Combination +1.20D+0.50L+0.20S+E+1.60H
Location of max.above base 16.611 ft
At maximum location values are . . .
Pu 0.0 k
0.9 * Pn 194.149 k
Mu-x 17.015 k-ft
0.9 * Mn-x : 93.690 k-ft
Mu-y 17.968 k-ft
0.9 * Mn-y : 37.80 k-ft

PASS Maximum Shear Stress Ratio = 0.09161 : 1
Load Combination +1.40D+1.60H
Location of max.above base 0.0 ft
At maximum location values are . . .
Vu : Applied 2.541 k
Vn * Phi : Allowable 27.738 k

Maximum SERVICE Load Reactions . .
Top along X-X 1.815 k
Bottom along X-X 1.815 k
Top along Y-Y 2.063 k
Bottom along Y-Y 2.063 k

Maximum SERVICE Load Deflections . . .
Along Y-Y 0.7452 in at 16.611 ft above base
for load combination : E Only
Along X-X 4.803 in at 16.611 ft above base
for load combination : +D+H

Load Combination Results

Load Combination	Maximum Axial + Bending Stress Ratios: Stress Ratio	Status	Location	Maximum Shear Ratios: Stress Ratio	Status	Location
+1.40D+1.60H	0.555	PASS	16.61 ft	0.092	PASS	0.00 ft
+1.20D+0.50Lr+1.60L+1.60H	0.475	PASS	16.61 ft	0.079	PASS	0.00 ft
+1.20D+1.60L+0.50S+1.60H	0.475	PASS	16.61 ft	0.079	PASS	0.00 ft
+1.20D+1.60Lr+0.50L+1.60H	0.475	PASS	16.61 ft	0.079	PASS	0.00 ft
+1.20D+1.60Lr+0.50W+1.60H	0.475	PASS	16.61 ft	0.079	PASS	0.00 ft
+1.20D+0.50L+1.60S+1.60H	0.475	PASS	16.61 ft	0.079	PASS	0.00 ft
+1.20D+1.60S+0.50W+1.60H	0.475	PASS	16.61 ft	0.079	PASS	0.00 ft
+1.20D+0.50Lr+0.50L+W+1.60H	0.475	PASS	16.61 ft	0.079	PASS	0.00 ft
+1.20D+0.50L+0.50S+W+1.60H	0.475	PASS	16.61 ft	0.079	PASS	0.00 ft
+1.20D+0.50L+0.20S+E+1.60H	0.657	PASS	16.61 ft	0.079	PASS	0.00 ft
+0.90D+W+0.90H	0.357	PASS	16.39 ft	0.059	PASS	0.00 ft
+0.90D+E+0.90H	0.538	PASS	16.39 ft	0.059	PASS	0.00 ft

Maximum Reactions

Note: Only non-zero reactions are listed.

Load Combination	X-X Axis Reaction @ Base	X-X Axis Reaction @ Top	Y-Y Axis Reaction @ Base	Y-Y Axis Reaction @ Top	Axial Reaction @ Base
+D+H	-1.815	1.815 k		k	k
+D+L+H	-1.815	1.815 k		k	k

STEEL BEAM

Lic. # : KW-06009801

Description : Archway beam

Maximum Reactions

Note: Only non-zero reactions are listed.

Load Combination	X-X Axis Reaction @ Base	X-X Axis Reaction @ Top	Y-Y Axis Reaction @ Base	Y-Y Axis Reaction @ Top	Axial Reaction @ Base
+D+Lr+H	-1.815	1.815 k		k	k
+D+S+H	-1.815	1.815 k		k	k
+D+0.750Lr+0.750L+H	-1.815	1.815 k		k	k
+D+0.750L+0.750S+H	-1.815	1.815 k		k	k
+D+0.60W+H	-1.815	1.815 k		k	k
+D+0.70E+H	-1.815	1.815 k	-1.444	1.444 k	k
+D+0.750Lr+0.750L+0.450W+H	-1.815	1.815 k		k	k
+D+0.750L+0.750S+0.450W+H	-1.815	1.815 k		k	k
+D+0.750L+0.750S+0.5250E+H	-1.815	1.815 k	-1.083	1.083 k	k
+0.60D+0.60W+0.60H	-1.089	1.089 k		k	k
+0.60D+0.70E+0.60H	-1.089	1.089 k	-1.444	1.444 k	k
D Only	-1.815	1.815 k		k	k
Lr Only		k		k	k
L Only		k		k	k
S Only		k		k	k
W Only		k		k	k
E Only		k	-2.063	2.063 k	k
H Only		k		k	k

Maximum Deflections for Load Combinations

Load Combination	Max. X-X Deflection		Distance		Max. Y-Y Deflection		Distance	
+D+H	4.8030	in	16.611	ft	0.000	in	0.000	ft
+D+L+H	4.8030	in	16.611	ft	0.000	in	0.000	ft
+D+Lr+H	4.8030	in	16.611	ft	0.000	in	0.000	ft
+D+S+H	4.8030	in	16.611	ft	0.000	in	0.000	ft
+D+0.750Lr+0.750L+H	4.8030	in	16.611	ft	0.000	in	0.000	ft
+D+0.750L+0.750S+H	4.8030	in	16.611	ft	0.000	in	0.000	ft
+D+0.60W+H	4.8030	in	16.611	ft	0.000	in	0.000	ft
+D+0.70E+H	4.8030	in	16.611	ft	0.522	in	16.611	ft
+D+0.750Lr+0.750L+0.450W+H	4.8030	in	16.611	ft	0.000	in	0.000	ft
+D+0.750L+0.750S+0.450W+H	4.8030	in	16.611	ft	0.000	in	0.000	ft
+D+0.750L+0.750S+0.5250E+H	4.8030	in	16.611	ft	0.391	in	16.611	ft
+0.60D+0.60W+0.60H	2.8818	in	16.611	ft	0.000	in	0.000	ft
+0.60D+0.70E+0.60H	2.8818	in	16.611	ft	0.522	in	16.611	ft
D Only	4.8030	in	16.611	ft	0.000	in	0.000	ft
Lr Only	0.0000	in	0.000	ft	0.000	in	0.000	ft
L Only	0.0000	in	0.000	ft	0.000	in	0.000	ft
S Only	0.0000	in	0.000	ft	0.000	in	0.000	ft
W Only	0.0000	in	0.000	ft	0.000	in	0.000	ft
E Only	0.0000	in	0.000	ft	0.745	in	16.611	ft
H Only	0.0000	in	0.000	ft	0.000	in	0.000	ft

Steel Section Properties : HSS12x3-1/2x3/8

Depth	=	12.000 in	I xx	=	156.00 in^4	J	=	64.700 in^4
			S xx	=	26.00 in^3	Cw	=	25.50 in^6
Width	=	3.500 in	R xx	=	3.940 in			
Wall Thick	=	0.375 in	Zx	=	34.700 in^3			
Area	=	10.000 in^2	I yy	=	21.300 in^4	C	=	25.500 in^3
Weight	=	36.338 plf	S yy	=	12.200 in^3			
			R yy	=	1.460 in			
			Zy	=	14.000 in^3			
Ycg	=	0.000 in						

Description : Archway beam

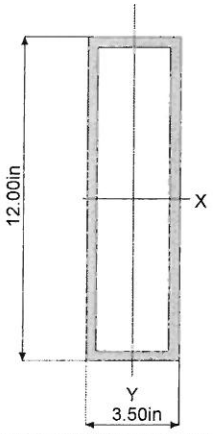

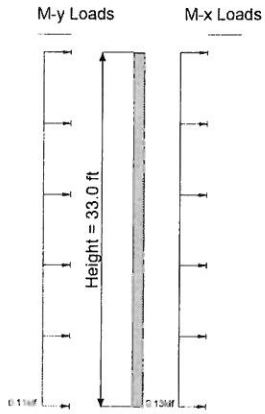

Loads are total entered value. Arrows do not reflect absolute direction.

Masonry Column PILASTER

Lic. # : KW-06009801 Licensee : ENGLEKIRK

Description : Entry Pilaster

Code References

Calculations per ACI 530-11, IBC 2012, CBC 2013, ASCE 7-10
Load Combinations Used : ASCE 7-10

General Information

Material Properties

F'm	=	1,500.0 psi
Fr - Rupture	=	75.0 psi
Em = f'm *	=	900.0
Column Density	=	130.0 pcf
Rebar Grade	=	Grade 60
Fy - Yield	=	60000 psi
Fs - Allowable	=	32000 psi
E - Rebar	=	29,000.0 ksi

Load Combination = ASCE 7-10

Column Data

Column width along X-X	=	40.0 in
Column depth along Y-Y	=	40.0 in
Longitudinal Bar Size	=	# 5.0
Bars per side at +Y & -Y	=	5
Bars per side at +X & -X	=	5
Cover from ties	=	3.50 in
Actual Edge to Bar Center	=	4.3125 in

Analysis Settings

Analysis Method	=	**Strength Design**
φ factor for Strength Design	=	0.90
End Fixity Condition	=	Top Free, Bottom Fixed
Overall Column Height	=	7.0 ft
Construction Type		Solid Grouted Hollow Concrete Masonry
Tie Bar Size	=	# 4.0
Tie Bar Spacing	=	8.0 in

Brace condition for deflection (buckling) along columns :

X-X (width) axis : Unbraced Length for X-X Axis buckling = 7.0 ft, K = 2
Y-Y (depth) axis : Unbraced Length for X-X Axis buckling = 10 ft, K = 2

Applied Loads

Service loads entered. Load Factors will be applied for calculations.

Column self weight included : 10,111.1 lbs * Dead Load Factor
AXIAL LOADS . . .
Axial Load at 7.0 ft, D = 3.50, E = 0.6870 k
BENDING LOADS . . .
Lat. Point Load at 7.0 ft creating My-y, E = 4.125 k

DESIGN SUMMARY

Bending & Shear Check Results

PASS **Maximum Bending Stress Ratio** = **0.034** : 1

Load Combination	+0.90D+E+0.90H	
Location of max.above base	0.000	ft
At maximum location values are . . .		
Pu	12.937	k
0.9 * Pn	383.126	k
Mu-x	-28.875	k-ft
0.9 * Mn-x :	853.890	k-ft

PASS **Reinforcing Area Check** *(ACI 530-11, Sec 3.3.4.*

As : Actual Reinforcement	4.960
Min: 0.0025 * An	4.000
Max: 0.04 * An	64.000

Dimensional Checks

Min. Width/Depth >= 8" *(ACI 530-11. Sec 3.4.4.*

PASS Overall Height / Min Dim <= 30 *(ACI 530-11. Sec 3.4.4.*

Maximum SERVICE Load Reactions . .

Top along X-X	0.000 k
Bottom along X-X	4.125 k

Maximum SERVICE Load Deflections . . .

Along x-x 0.003 in at 7.000 ft above base
for load combination : E Only

Compressive Strength 1.557 k *(ACI 530-11, Sec 3.3.4.*
Pa = 0.80 [0.80 f'm (An - Ast) + FyAst) * [1-(h/(140*r))^2]

PASS **Check Column Ties** *(ACI 530-11, Sec 2.1.6.*

Min. Tie Dia. = 1/4", # 4 bar provided
Max Tie Spacing = 10.00 in, Provided = 8.00 in

Load Combination Results

Load Combination	Maximum Bending Stress Ratios: Stress Ratio	Status	Location	Maximum Axial Load: Actual	Allow	Maximum Moments: Actual	Allow
+1.40D+1.60H	0.01103	PASS	0.0 ft	19.056 k	1,556.93 k	0.0 k-ft	749.92 k-ft
+1.20D+0.50Lr+1.60L+1.60H	0.009451	PASS	0.0 ft	16.333 k	1,556.93 k	0.0 k-ft	749.92 k-ft
+1.20D+1.60L+0.50S+1.60H	0.009451	PASS	0.0 ft	16.333 k	1,556.93 k	0.0 k-ft	749.92 k-ft
+1.20D+1.60Lr+0.50L+1.60H	0.009451	PASS	0.0 ft	16.333 k	1,556.93 k	0.0 k-ft	749.92 k-ft
+1.20D+1.60Lr+0.50W+1.60H	0.009451	PASS	0.0 ft	16.333 k	1,556.93 k	0.0 k-ft	749.92 k-ft
+1.20D+0.50L+1.60S+1.60H	0.009451	PASS	0.0 ft	16.333 k	1,556.93 k	0.0 k-ft	749.92 k-ft
+1.20D+1.60S+0.50W+1.60H	0.009451	PASS	0.0 ft	16.333 k	1,556.93 k	0.0 k-ft	749.92 k-ft
+1.20D+0.50Lr+0.50L+W+1.60H	0.009451	PASS	0.0 ft	16.333 k	1,556.93 k	0.0 k-ft	749.92 k-ft
+1.20D+0.50L+0.50S+W+1.60H	0.009451	PASS	0.0 ft	16.333 k	1,556.93 k	0.0 k-ft	749.92 k-ft

Masonry Column

Lic. # : KW-06009801 Licensee : ENGLEKIRK

Description : Entry Pilaster

Load Combination Results

Load Combination	Maximum Bending Stress Ratios: Stress Ratio	Status	Location	Maximum Axial Load: Actual	Allow	Maximum Moments: Actual	Allow
+1.20D+0.50L+0.20S+E+1.60H	0.02958	PASS	0.0 ft	17.020 k	575.57 k	28.875 k-ft	976.30 k-ft
+0.90D+W+0.90H	0.007089	PASS	0.0 ft	12.250 k	1,556.93 k	0.0 k-ft	749.92 k-ft
+0.90D+E+0.90H	0.03381	PASS	0.0 ft	12.937 k	383.126 k	28.875 k-ft	853.89 k-ft

Maximum Reactions

Note: Only non-zero reactions are listed.

Load Combination	Y-Y Axis Reaction @ Base	@ Top	Axial Reaction @ Base
+D+H	k	k	13.611 k
+D+L+H	k	k	13.611 k
+D+Lr+H	k	k	13.611 k
+D+S+H	k	k	13.611 k
+D+0.750Lr+0.750L+H	k	k	13.611 k
+D+0.750L+0.750S+H	k	k	13.611 k
+D+0.60W+H	k	k	13.611 k
+D+0.70E+H	2.888 k	k	14.092 k
+D+0.750Lr+0.750L+0.450W+H	k	k	13.611 k
+D+0.750L+0.750S+0.450W+H	k	k	13.611 k
+D+0.750L+0.750S+0.5250E+H	2.166 k	k	13.972 k
+0.60D+0.60W+0.60H	k	k	8.167 k
+0.60D+0.70E+0.60H	2.888 k	k	8.648 k
D Only	k	k	13.611 k
Lr Only	k	k	k
L Only	k	k	k
S Only	k	k	k
W Only	k	k	k
E Only	4.125 k	k	0.687 k
H Only	k	k	k

Maximum Deflections for Load Combinations

Load Combination	Max. Y-Y Deflection	Distance
+D+H	0.0000 in	0.000 ft
+D+L+H	0.0000 in	0.000 ft
+D+Lr+H	0.0000 in	0.000 ft
+D+S+H	0.0000 in	0.000 ft
+D+0.750Lr+0.750L+H	0.0000 in	0.000 ft
+D+0.750L+0.750S+H	0.0000 in	0.000 ft
+D+0.60W+H	0.0000 in	0.000 ft
+D+0.70E+H	0.0020 in	7.000 ft
+D+0.750Lr+0.750L+0.450W+H	0.0000 in	0.000 ft
+D+0.750L+0.750S+0.450W+H	0.0000 in	0.000 ft
+D+0.750L+0.750S+0.5250E+H	0.0015 in	7.000 ft
+0.60D+0.60W+0.60H	0.0000 in	0.000 ft
+0.60D+0.70E+0.60H	0.0020 in	7.000 ft
D Only	0.0000 in	0.000 ft
Lr Only	0.0000 in	0.000 ft
L Only	0.0000 in	0.000 ft
S Only	0.0000 in	0.000 ft
W Only	0.0000 in	0.000 ft
E Only	0.0028 in	7.000 ft
H Only	0.0000 in	0.000 ft

Printed: 12 JUL 2015, 10:19AM

Masonry Column

File = R:\10VOB9~Y\AH4SYN~Q.EC6
ENERCALC, INC. 1983-2015, Build:6.15.1.19, Ver:6.15.1.19

Lic. # : KW-06009801 Licensee : ENGLEKIRK

Description : Entry Pilaster

Cross Section

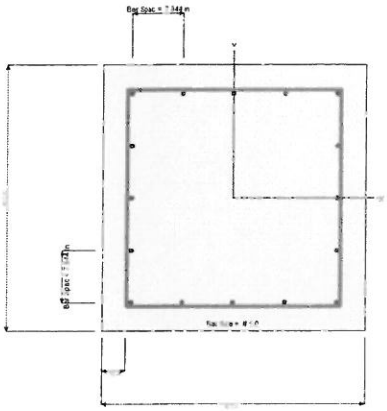

Interaction Diagram

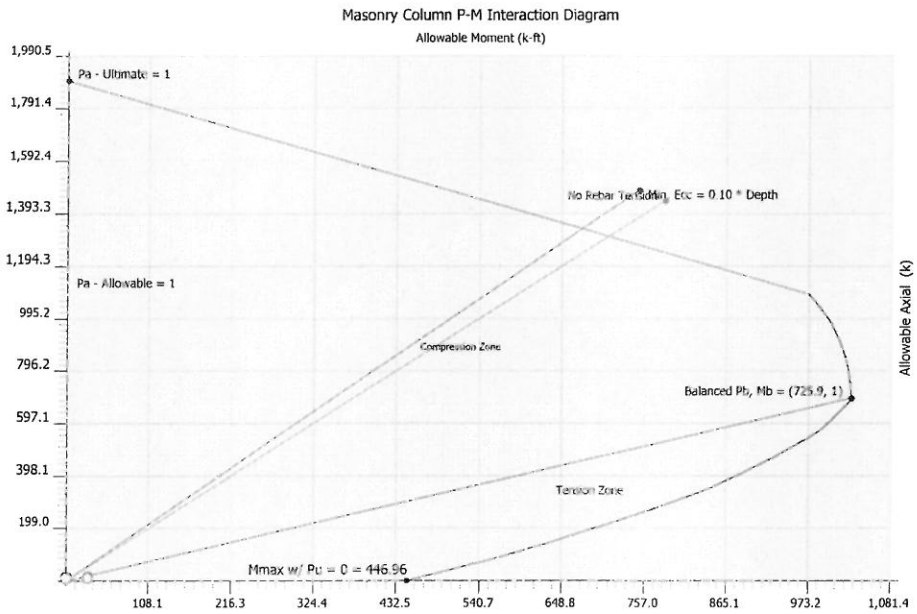

General Footing

Lic. # : KW-06009801 **Licensee : ENGLEKIRK**

Description : Entry Gateway Footing

Code References

Calculations per ACI 318-11, IBC 2012, CBC 2013, ASCE 7-10
Load Combinations Used : ASCE 7-10

General Information

Material Properties

f'c : Concrete 28 day strength	=	3.0 ksi
fy : Rebar Yield	=	60.0 ksi
Ec : Concrete Elastic Modulus	=	3,122.0 ksi
Concrete Density	=	145.0 pcf
φ Values Flexure	=	0.90
Shear	=	0.850

Analysis Settings

Min Steel % Bending Reinf.	=	
Min Allow % Temp Reinf.	=	0.00180
Min. Overturning Safety Factor	=	1.50 : 1
Min. Sliding Safety Factor	=	1.50 : 1
Add Ftg Wt for Soil Pressure	:	Yes
Use ftg wt for stability, moments & shears	:	Yes
Add Pedestal Wt for Soil Pressure	:	Yes
Use Pedestal wt for stability, mom & shear	:	No

Soil Design Values

Allowable Soil Bearing	=	3.0 ksf
Increase Bearing By Footing Weight	=	No
Soil Passive Resistance (for Sliding)	=	250.0 pcf
Soil/Concrete Friction Coeff.	=	0.30

Increases based on footing Depth

Footing base depth below soil surface	=	2.50 ft
Allowable pressure increase per foot of deptl	=	0.0 ksf
when footing base is below	=	0.0 ft

Increases based on footing plan dimension

Allowable pressure increase per foot of dept	=	0.0 ksf
when maximum length or width is greater	=	0.0 ft

Dimensions

Width parallel to X-X Axis	=	6.0 ft
Length parallel to Z-Z Axis	=	6.0 ft
Footing Thicknes	=	30.0 in

Pedestal dimensions...

px : parallel to X-X Axis	=	40.0 in
pz : parallel to Z-Z Axis	=	40.0 in
Height	=	42.0 in

Rebar Centerline to Edge of Concrete..

at Bottom of footing	=	3.0 in

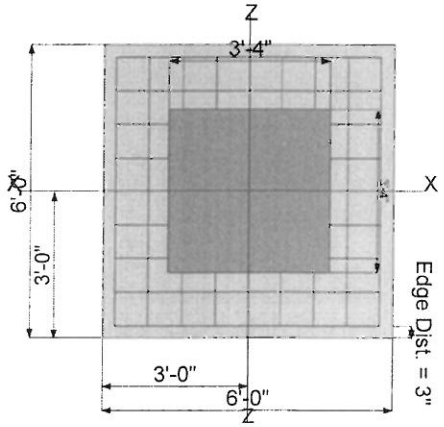

Reinforcing

Bars parallel to X-X Axis

Number of Bars	=	9
Reinforcing Bar Size	=	# 6

Bars parallel to Z-Z Axis

Number of Bars	=	9
Reinforcing Bar Size	=	# 6

Bandwidth Distribution Check (ACI 15.4.4.2)

Direction Requiring Closer Separation	n/a
# Bars required within zone	n/a
# Bars required on each side of zone	n/a

Applied Loads

		D	Lr	L	S	W	E	H
P : Column Load	=	3.50	0.0	0.0	0.0	0.0	0.690	0.0 k
OB : Overburden	=	0.0	0.0	0.0	0.0	0.0	0.0	0.0 ksf
M-xx	=	0.0	0.0	0.0	0.0	0.0	0.0	0.0 k-ft
M-zz	=	0.0	0.0	0.0	0.0	0.0	0.0	0.0 k-ft
V-x	=	0.0	0.0	0.0	0.0	0.0	4.150	0.0 k
V-z	=	0.0	0.0	0.0	0.0	0.0	0.0	0.0 k

General Footing

Lic. # : KW-06009801 **Licensee : ENGLEKIRK**

Description : Entry Gateway Footing

DESIGN SUMMARY

Design OK

	Min. Ratio	Item	Applied	Capacity	Governing Load Combination
PASS	0.3687	Soil Bearing	1.106 ksf	3.0 ksf	+D+0.70E+H about Z-Z axis
PASS	n/a	Overturning - X-X	0.0 k-ft	0.0 k-ft	No Overturning
PASS	1.792	Overturning - Z-Z	17.430 k-ft	31.239 k-ft	+0.60D+0.70E+0.60H
PASS	n/a	Uplift	0.0 k	0.0 k	No Uplift
PASS	0.01036	Z Flexure (+X)	0.8109 k-ft	78.268 k-ft	+1.20D+0.50L+0.20S+E+1.60H
PASS	0.004034	Z Flexure (-X)	0.3157 k-ft	78.268 k-ft	+1.40D+1.60H
PASS	0.004034	X Flexure (+Z)	0.3157 k-ft	78.268 k-ft	+1.40D+1.60H
PASS	0.004034	X Flexure (-Z)	0.3157 k-ft	78.268 k-ft	+1.40D+1.60H
PASS	n/a	1-way Shear (+X)	0.0 psi	93.113 psi	n/a
PASS	0.0	1-way Shear (-X)	0.0 psi	0.0 psi	n/a
PASS	n/a	1-way Shear (+Z)	0.0 psi	93.113 psi	n/a
PASS	n/a	1-way Shear (-Z)	0.0 psi	93.113 psi	n/a
PASS	n/a	2-way Punching	0.2279 psi	93.113 psi	+1.40D+1.60H

Detailed Results

Soil Bearing

Rotation Axis & Load Combination...	Gross Allowable	Xecc	Zecc	Actual Soil Bearing Stress Bottom, -Z	Top, +Z	Left, -X	Right, +X	Actual / Allowable Ratio
X-X, +D+H	3.0	n/a	0.0	0.6164	0.6164	n/a	n/a	0.206
X-X, +D+L+H	3.0	n/a	0.0	0.6164	0.6164	n/a	n/a	0.206
X-X, +D+Lr+H	3.0	n/a	0.0	0.6164	0.6164	n/a	n/a	0.206
X-X, +D+S+H	3.0	n/a	0.0	0.6164	0.6164	n/a	n/a	0.206
X-X, +D+0.750Lr+0.750L+H	3.0	n/a	0.0	0.6164	0.6164	n/a	n/a	0.206
X-X, +D+0.750L+0.750S+H	3.0	n/a	0.0	0.6164	0.6164	n/a	n/a	0.206
X-X, +D+0.60W+H	3.0	n/a	0.0	0.6164	0.6164	n/a	n/a	0.206
X-X, +D+0.70E+H	3.0	n/a	0.0	0.6298	0.6298	n/a	n/a	0.210
X-X, +D+0.750Lr+0.750L+0.450W+H	3.0	n/a	0.0	0.6164	0.6164	n/a	n/a	0.206
X-X, +D+0.750L+0.750S+0.450W+H	3.0	n/a	0.0	0.6164	0.6164	n/a	n/a	0.206
X-X, +D+0.750L+0.750S+0.5250E+H	3.0	n/a	0.0	0.6264	0.6264	n/a	n/a	0.209
X-X, +0.60D+0.60W+0.60H	3.0	n/a	0.0	0.3698	0.3698	n/a	n/a	0.123
X-X, +0.60D+0.70E+0.60H	3.0	n/a	0.0	0.3832	0.3832	n/a	n/a	0.128
Z-Z, +D+H	3.0	0.0	n/a	n/a	n/a	0.6164	0.6164	0.206
Z-Z, +D+L+H	3.0	0.0	n/a	n/a	n/a	0.6164	0.6164	0.206
Z-Z, +D+Lr+H	3.0	0.0	n/a	n/a	n/a	0.6164	0.6164	0.206
Z-Z, +D+S+H	3.0	0.0	n/a	n/a	n/a	0.6164	0.6164	0.206
Z-Z, +D+0.750Lr+0.750L+H	3.0	0.0	n/a	n/a	n/a	0.6164	0.6164	0.206
Z-Z, +D+0.750L+0.750S+H	3.0	0.0	n/a	n/a	n/a	0.6164	0.6164	0.206
Z-Z, +D+0.60W+H	3.0	0.0	n/a	n/a	n/a	0.6164	0.6164	0.206
Z-Z, +D+0.70E+H	3.0	9.226	n/a	n/a	n/a	0.1537	1.106	0.369
Z-Z, +D+0.750Lr+0.750L+0.450W+H	3.0	0.0	n/a	n/a	n/a	0.6164	0.6164	0.206
Z-Z, +D+0.750L+0.750S+0.450W+H	3.0	0.0	n/a	n/a	n/a	0.6164	0.6164	0.206
Z-Z, +D+0.750L+0.750S+0.5250E+H	3.0	6.956	n/a	n/a	n/a	0.2693	0.9835	0.328
Z-Z, +0.60D+0.60W+0.60H	3.0	0.0	n/a	n/a	n/a	0.3698	0.3698	0.123
Z-Z, +0.60D+0.70E+0.60H	3.0	15.161	n/a	n/a	n/a	0.0	0.8742	0.291

Overturning Stability

Rotation Axis & Load Combination...	Overturning Moment	Resisting Moment	Stability Ratio	Status
X-X, +D+H	None	0.0 k-ft	Infinity	OK
X-X, +D+L+H	None	0.0 k-ft	Infinity	OK
X-X, +D+Lr+H	None	0.0 k-ft	Infinity	OK
X-X, +D+S+H	None	0.0 k-ft	Infinity	OK
X-X, +D+0.750Lr+0.750L+H	None	0.0 k-ft	Infinity	OK
X-X, +D+0.750L+0.750S+H	None	0.0 k-ft	Infinity	OK
X-X, +D+0.60W+H	None	0.0 k-ft	Infinity	OK
X-X, +D+0.70E+H	None	0.0 k-ft	Infinity	OK
X-X, +D+0.750Lr+0.750L+0.450W+H	None	0.0 k-ft	Infinity	OK
X-X, +D+0.750L+0.750S+0.450W+H	None	0.0 k-ft	Infinity	OK

General Footing

Lic. # : KW-06009801 **Licensee : ENGLEKIRK**

Description : Entry Gateway Footing

Overturning Stability

Rotation Axis & Load Combination...	Overturning Moment	Resisting Moment	Stability Ratio	Status
X-X, +D+0.750L+0.750S+0.5250E+H	None	0.0 k-ft	Infinity	OK
X-X, +0.60D+0.60W+0.60H	None	0.0 k-ft	Infinity	OK
X-X, +0.60D+0.70E+0.60H	None	0.0 k-ft	Infinity	OK
Z-Z, +D+H	None	0.0 k-ft	Infinity	OK
Z-Z, +D+L+H	None	0.0 k-ft	Infinity	OK
Z-Z, +D+Lr+H	None	0.0 k-ft	Infinity	OK
Z-Z, +D+S+H	None	0.0 k-ft	Infinity	OK
Z-Z, +D+0.750Lr+0.750L+H	None	0.0 k-ft	Infinity	OK
Z-Z, +D+0.750L+0.750S+H	None	0.0 k-ft	Infinity	OK
Z-Z, +D+0.60W+H	None	0.0 k-ft	Infinity	OK
Z-Z, +D+0.70E+H	17.430 k-ft	51.099 k-ft	2.932	OK
Z-Z, +D+0.750Lr+0.750L+0.450W+H	None	0.0 k-ft	Infinity	OK
Z-Z, +D+0.750L+0.750S+0.450W+H	None	0.0 k-ft	Infinity	OK
Z-Z, +D+0.750L+0.750S+0.5250E+H	13.073 k-ft	50.737 k-ft	3.881	OK
Z-Z, +0.60D+0.60W+0.60H	None	0.0 k-ft	Infinity	OK
Z-Z, +0.60D+0.70E+0.60H	17.430 k-ft	31.239 k-ft	1.792	OK

Footing Flexure

Flexure Axis & Load Combination	Mu k-ft	Which Side ?	Tension @ Bot or Top ?	As Req'd in^2	Gvrn. As in^2	Actual As in^2	Phi*Mn k-ft	Status
X-X, +1.40D+1.60H	0.3157	+Z	Bottom	0.648	Min Temp %	0.660	78.268	OK
X-X, +1.40D+1.60H	0.3157	-Z	Bottom	0.648	Min Temp %	0.660	78.268	OK
X-X, +1.20D+0.50Lr+1.60L+1.60H	0.2706	+Z	Bottom	0.648	Min Temp %	0.660	78.268	OK
X-X, +1.20D+0.50Lr+1.60L+1.60H	0.2706	-Z	Bottom	0.648	Min Temp %	0.660	78.268	OK
X-X, +1.20D+1.60L+0.50S+1.60H	0.2706	+Z	Bottom	0.648	Min Temp %	0.660	78.268	OK
X-X, +1.20D+1.60L+0.50S+1.60H	0.2706	-Z	Bottom	0.648	Min Temp %	0.660	78.268	OK
X-X, +1.20D+1.60Lr+0.50L+1.60H	0.2706	+Z	Bottom	0.648	Min Temp %	0.660	78.268	OK
X-X, +1.20D+1.60Lr+0.50L+1.60H	0.2706	-Z	Bottom	0.648	Min Temp %	0.660	78.268	OK
X-X, +1.20D+1.60Lr+0.50W+1.60H	0.2706	+Z	Bottom	0.648	Min Temp %	0.660	78.268	OK
X-X, +1.20D+1.60Lr+0.50W+1.60H	0.2706	-Z	Bottom	0.648	Min Temp %	0.660	78.268	OK
X-X, +1.20D+0.50L+1.60S+1.60H	0.2706	+Z	Bottom	0.648	Min Temp %	0.660	78.268	OK
X-X, +1.20D+0.50L+1.60S+1.60H	0.2706	-Z	Bottom	0.648	Min Temp %	0.660	78.268	OK
X-X, +1.20D+1.60S+0.50W+1.60H	0.2706	+Z	Bottom	0.648	Min Temp %	0.660	78.268	OK
X-X, +1.20D+1.60S+0.50W+1.60H	0.2706	-Z	Bottom	0.648	Min Temp %	0.660	78.268	OK
X-X, +1.20D+0.50Lr+0.50L+W+1.60H	0.2706	+Z	Bottom	0.648	Min Temp %	0.660	78.268	OK
X-X, +1.20D+0.50Lr+0.50L+W+1.60H	0.2706	-Z	Bottom	0.648	Min Temp %	0.660	78.268	OK
X-X, +1.20D+0.50L+0.50S+W+1.60H	0.2706	+Z	Bottom	0.648	Min Temp %	0.660	78.268	OK
X-X, +1.20D+0.50L+0.50S+W+1.60H	0.2706	-Z	Bottom	0.648	Min Temp %	0.660	78.268	OK
X-X, +1.20D+0.50L+0.20S+E+1.60H	0.2876	+Z	Bottom	0.648	Min Temp %	0.660	78.268	OK
X-X, +1.20D+0.50L+0.20S+E+1.60H	0.2876	-Z	Bottom	0.648	Min Temp %	0.660	78.268	OK
X-X, +0.90D+W+0.90H	0.2030	+Z	Bottom	0.648	Min Temp %	0.660	78.268	OK
X-X, +0.90D+W+0.90H	0.2030	-Z	Bottom	0.648	Min Temp %	0.660	78.268	OK
X-X, +0.90D+E+0.90H	0.220	+Z	Bottom	0.648	Min Temp %	0.660	78.268	OK
X-X, +0.90D+E+0.90H	0.220	-Z	Bottom	0.648	Min Temp %	0.660	78.268	OK
Z-Z, +1.40D+1.60H	0.3157	-X	Bottom	0.648	Min Temp %	0.660	78.268	OK
Z-Z, +1.40D+1.60H	0.3157	+X	Bottom	0.648	Min Temp %	0.660	78.268	OK
Z-Z, +1.20D+0.50Lr+1.60L+1.60H	0.2706	-X	Bottom	0.648	Min Temp %	0.660	78.268	OK
Z-Z, +1.20D+0.50Lr+1.60L+1.60H	0.2706	+X	Bottom	0.648	Min Temp %	0.660	78.268	OK
Z-Z, +1.20D+1.60L+0.50S+1.60H	0.2706	-X	Bottom	0.648	Min Temp %	0.660	78.268	OK
Z-Z, +1.20D+1.60L+0.50S+1.60H	0.2706	+X	Bottom	0.648	Min Temp %	0.660	78.268	OK
Z-Z, +1.20D+1.60Lr+0.50L+1.60H	0.2706	-X	Bottom	0.648	Min Temp %	0.660	78.268	OK
Z-Z, +1.20D+1.60Lr+0.50L+1.60H	0.2706	+X	Bottom	0.648	Min Temp %	0.660	78.268	OK
Z-Z, +1.20D+1.60Lr+0.50W+1.60H	0.2706	-X	Bottom	0.648	Min Temp %	0.660	78.268	OK
Z-Z, +1.20D+1.60Lr+0.50W+1.60H	0.2706	+X	Bottom	0.648	Min Temp %	0.660	78.268	OK
Z-Z, +1.20D+0.50L+1.60S+1.60H	0.2706	-X	Bottom	0.648	Min Temp %	0.660	78.268	OK
Z-Z, +1.20D+0.50L+1.60S+1.60H	0.2706	+X	Bottom	0.648	Min Temp %	0.660	78.268	OK
Z-Z, +1.20D+1.60S+0.50W+1.60H	0.2706	-X	Bottom	0.648	Min Temp %	0.660	78.268	OK
Z-Z, +1.20D+1.60S+0.50W+1.60H	0.2706	+X	Bottom	0.648	Min Temp %	0.660	78.268	OK
Z-Z, +1.20D+0.50Lr+0.50L+W+1.60H	0.2706	-X	Bottom	0.648	Min Temp %	0.660	78.268	OK
Z-Z, +1.20D+0.50Lr+0.50L+W+1.60H	0.2706	+X	Bottom	0.648	Min Temp %	0.660	78.268	OK
Z-Z, +1.20D+0.50L+0.50S+W+1.60H	0.2706	-X	Bottom	0.648	Min Temp %	0.660	78.268	OK
Z-Z, +1.20D+0.50L+0.50S+W+1.60H	0.2706	+X	Bottom	0.648	Min Temp %	0.660	78.268	OK
Z-Z, +1.20D+0.50L+0.20S+E+1.60H	0.2356	-X	Top	0.648	Min Temp %	0.660	78.268	OK

General Footing

Lic. # : KW-06009801 Licensee : ENGLEKIRK

Description : Entry Gateway Footing

Footing Flexure

Flexure Axis & Load Combination	Mu k-ft	Which Side ?	Tension @ Bot or Top ?	As Req'd in^2	Gvrn. As in^2	Actual As in^2	Phi*Mn k-ft	Status
Z-Z, +1.20D+0.50L+0.20S+E+1.60H	0.8109	+X	Bottom	0.648	Min Temp %	0.660	78.268	OK
Z-Z, +0.90D+W+0.90H	0.2030	-X	Bottom	0.648	Min Temp %	0.660	78.268	OK
Z-Z, +0.90D+W+0.90H	0.2030	+X	Bottom	0.648	Min Temp %	0.660	78.268	OK
Z-Z, +0.90D+E+0.90H	0.2752	-X	Top	0.648	Min Temp %	0.660	78.268	OK
Z-Z, +0.90D+E+0.90H	0.7525	+X	Bottom	0.648	Min Temp %	0.660	78.268	OK

One Way Shear

Load Combination...	Vu @ -X	Vu @ +X	Vu @ -Z	Vu @ +Z	Vu:Max	Phi Vn	Vu / Phi*Vn	Status
+1.40D+1.60H	0 psi	0 psi	0 psi	0 psi	0 psi	93.113 psi	0	OK
+1.20D+0.50Lr+1.60L+1.60H	0 psi	0 psi	0 psi	0 psi	0 psi	93.113 psi	0	OK
+1.20D+1.60L+0.50S+1.60H	0 psi	0 psi	0 psi	0 psi	0 psi	93.113 psi	0	OK
+1.20D+1.60Lr+0.50L+1.60H	0 psi	0 psi	0 psi	0 psi	0 psi	93.113 psi	0	OK
+1.20D+1.60Lr+0.50W+1.60H	0 psi	0 psi	0 psi	0 psi	0 psi	93.113 psi	0	OK
+1.20D+0.50L+1.60S+1.60H	0 psi	0 psi	0 psi	0 psi	0 psi	93.113 psi	0	OK
+1.20D+1.60S+0.50W+1.60H	0 psi	0 psi	0 psi	0 psi	0 psi	93.113 psi	0	OK
+1.20D+0.50Lr+0.50L+W+1.60H	0 psi	0 psi	0 psi	0 psi	0 psi	93.113 psi	0	OK
+1.20D+0.50L+0.50S+W+1.60H	0 psi	0 psi	0 psi	0 psi	0 psi	93.113 psi	0	OK
+1.20D+0.50L+0.20S+E+1.60H	0 psi	0 psi	0 psi	0 psi	0 psi	93.113 psi	0	OK
+0.90D+W+0.90H	0 psi	0 psi	0 psi	0 psi	0 psi	93.113 psi	0	OK
+0.90D+E+0.90H	0 psi	0 psi	0 psi	0 psi	0 psi	93.113 psi	0	OK

All units k

Punching Shear

Load Combination...	Vu	Phi*Vn	Vu / Phi*Vn	Status
+1.40D+1.60H	0.2279 psi	186.226 psi	0.001224	OK
+1.20D+0.50Lr+1.60L+1.60H	0.1953 psi	186.226 psi	0.001049	OK
+1.20D+1.60L+0.50S+1.60H	0.1953 psi	186.226 psi	0.001049	OK
+1.20D+1.60Lr+0.50L+1.60H	0.1953 psi	186.226 psi	0.001049	OK
+1.20D+1.60Lr+0.50W+1.60H	0.1953 psi	186.226 psi	0.001049	OK
+1.20D+0.50L+1.60S+1.60H	0.1953 psi	186.226 psi	0.001049	OK
+1.20D+1.60S+0.50W+1.60H	0.1953 psi	186.226 psi	0.001049	OK
+1.20D+0.50Lr+0.50L+W+1.60H	0.1953 psi	186.226 psi	0.001049	OK
+1.20D+0.50L+0.50S+W+1.60H	0.1953 psi	186.226 psi	0.001049	OK
+1.20D+0.50L+0.20S+E+1.60H	0.2076 psi	186.226 psi	0.001115	OK
+0.90D+W+0.90H	0.1465 psi	186.226 psi	0.000787	OK
+0.90D+E+0.90H	0.1754 psi	186.226 psi	0.000942	OK

CONNECTION OF STEEL TUBE POSTS TO PILASTERS

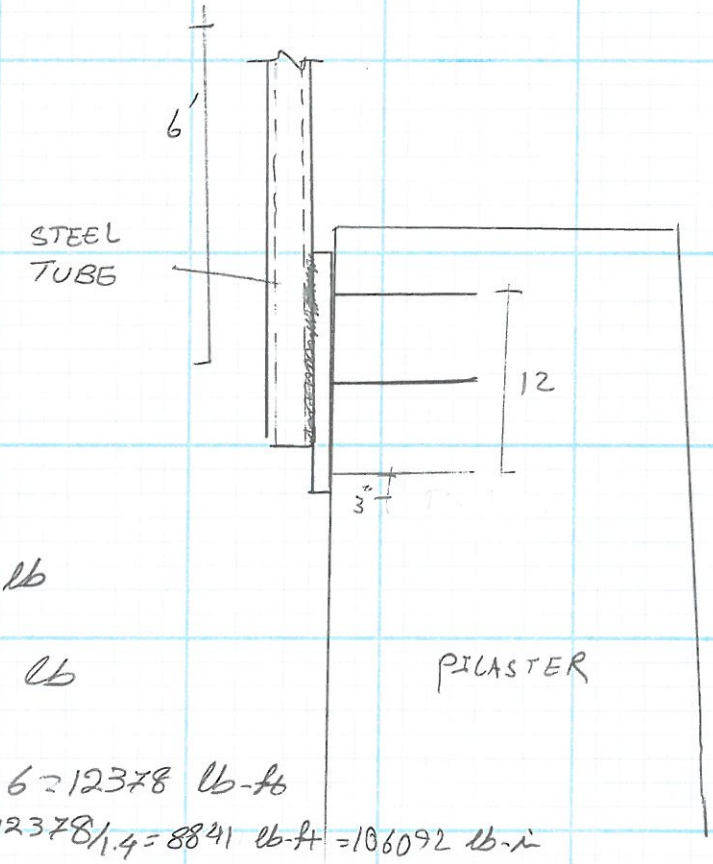

$DL = 1750$ lb

$F_p = 2063$ lb

$M = 2063 \times 6 = 12378$ lb-ft

$\Rightarrow M_{SERVICE} = 12378/1.4 = 8841$ lb-ft $= 106092$ lb-in

USE 12" WELD ON EITHER SIDE OF TUBE

$e = \frac{8841}{1750} = 5'$ $\Rightarrow a = \frac{5 \times 12}{12} = 6$ $\Rightarrow C = 0.439$

$C_1 = 1$

$R_n = CC_1 DL \times \Omega = 0.439 \times 1 \times \frac{5 \times 12}{2} = 13.17$ kips O.K

$T\text{-}C = \frac{106092}{15''} = 7073$ lb $\rightarrow$ PER ANCHOR $= 3536$ lb

$A_{s\,req} = \frac{3536}{0.6 \times 60 \times 10^3} = 0.1$ in^2 $\rightarrow$ USE #6 w 24" EMBEDMENT

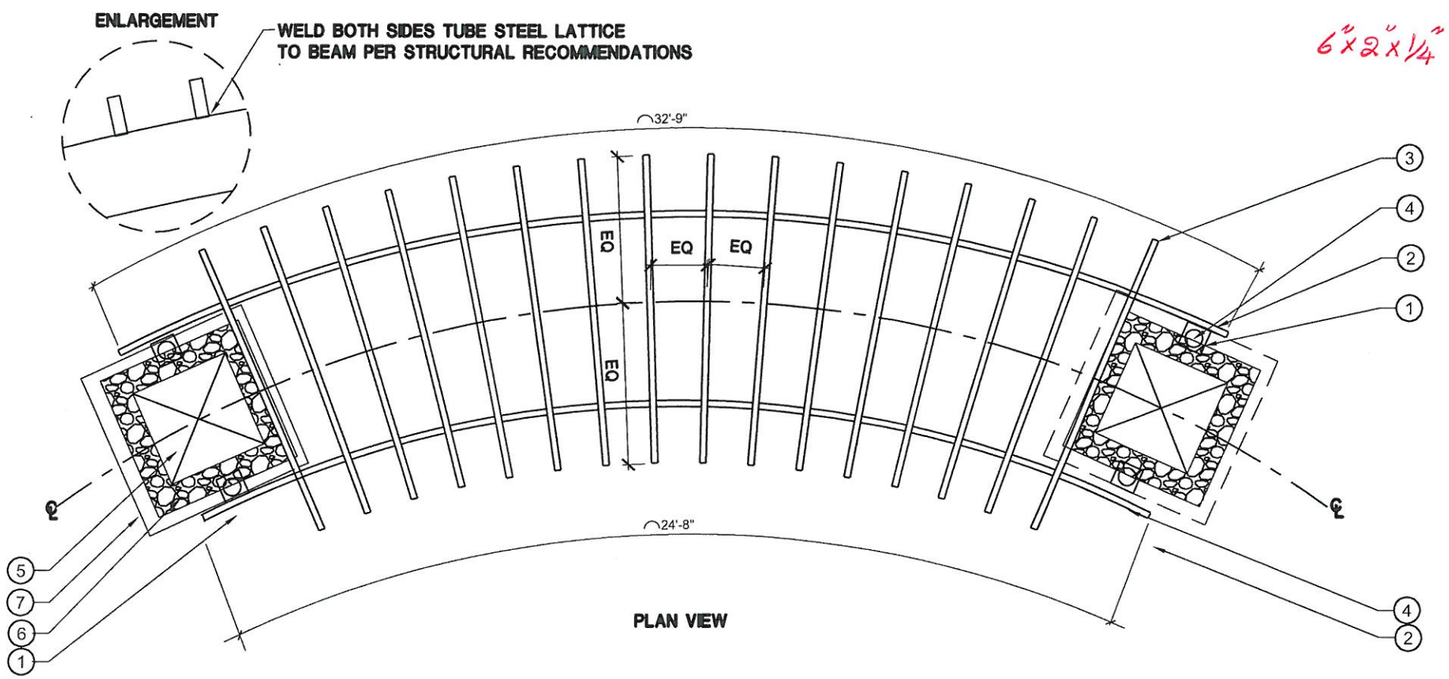

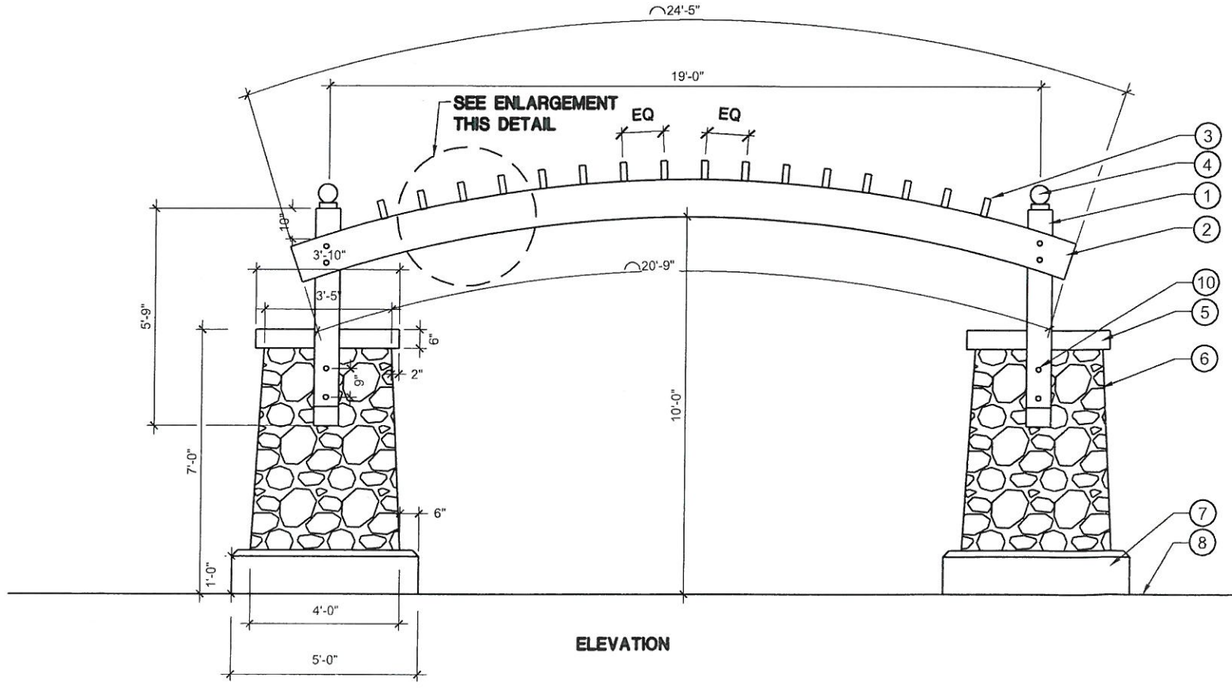

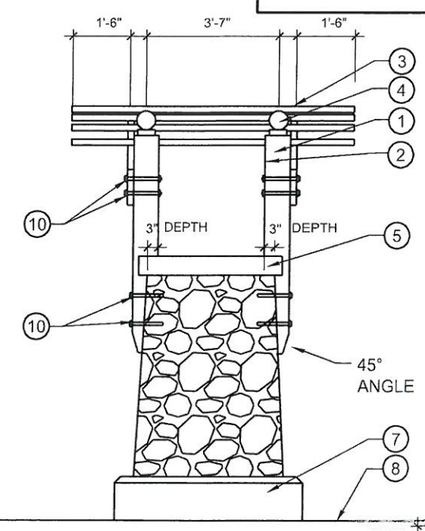

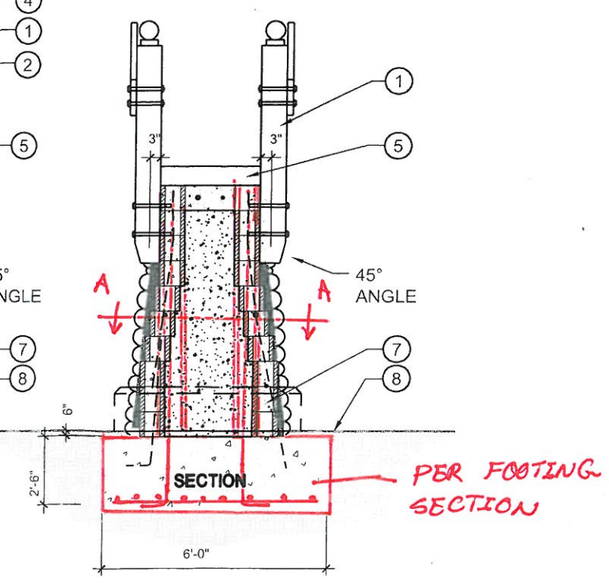

8x8x3/8

12"x2"x5/16"

6"x2"x1/4"

1. ~~8"x8"~~x5'-9" LENGTH TUBE STEEL POST
2. ~~2"x12"~~x 22' LENGTH TUBE STEEL BEAM
3. ~~2"x6"~~x10' LENGTH TUBE STEEL LATTICE @ APPROX. 16"O.C. EQ. SPACED FROM CENTER LINE CURVE
4. METAL BALL POST CAPS TO BE APPROVED BY CLIENT
5. PRECAST CONCRETE WALL CAP BY QCP-MODEL# Q-E48PC- 800 230-1377, NATURAL COLOR, LIGHT SANDBLAST, STD
6. COBBLE STONE VENEER PILASTER-'SIERRA SELECT', BY SOUTHWEST BOULDERS-760 751-3333 OR PROVED EQUAL
7. 5' X 12" HIGH PRECAST CONCRETE PILASTER BASE w/CHAMFER 4-SIDES MITER ALL CORNERS
8. FINISH GRADE
9. COMPACTED NATURAL SOIL -95% COMPACTION
10. 1/2" X 10" LAG BOLT AND WASHER WITH EXPANDER

NOTES:

1. TUBULAR STEEL COLOR SHALL BE BLACK FINISH SHALL BE POLISHED
2. FOR ADDITIONAL INFORMATION REFER TO CONSTRUCTION PLAN NOTES, SHEET L-5 AND L-6
3. RECOMMENDATIONS BY A STRUCTURAL ENGINEER SHALL TAKE PRECEDENCE FOR ALL SOIL CONDITIONS, MATERIALS, REINFORCEMENT, DIMENSIONS, AND SUBBASE.
4. ALL WELDED AND BOLTED CONNECTIONS SEE STRUCTURAL ENGINEER PLANS
5. FOR STRUCTURAL CALCULATIONS SEE SPECIFICATIONS
6. ALL METAL MEMBERS SHALL BE GALVANIZED

17

E ENTRY OVERHEAD STRUCTURE

SCALE: 3/16"=1'-0"

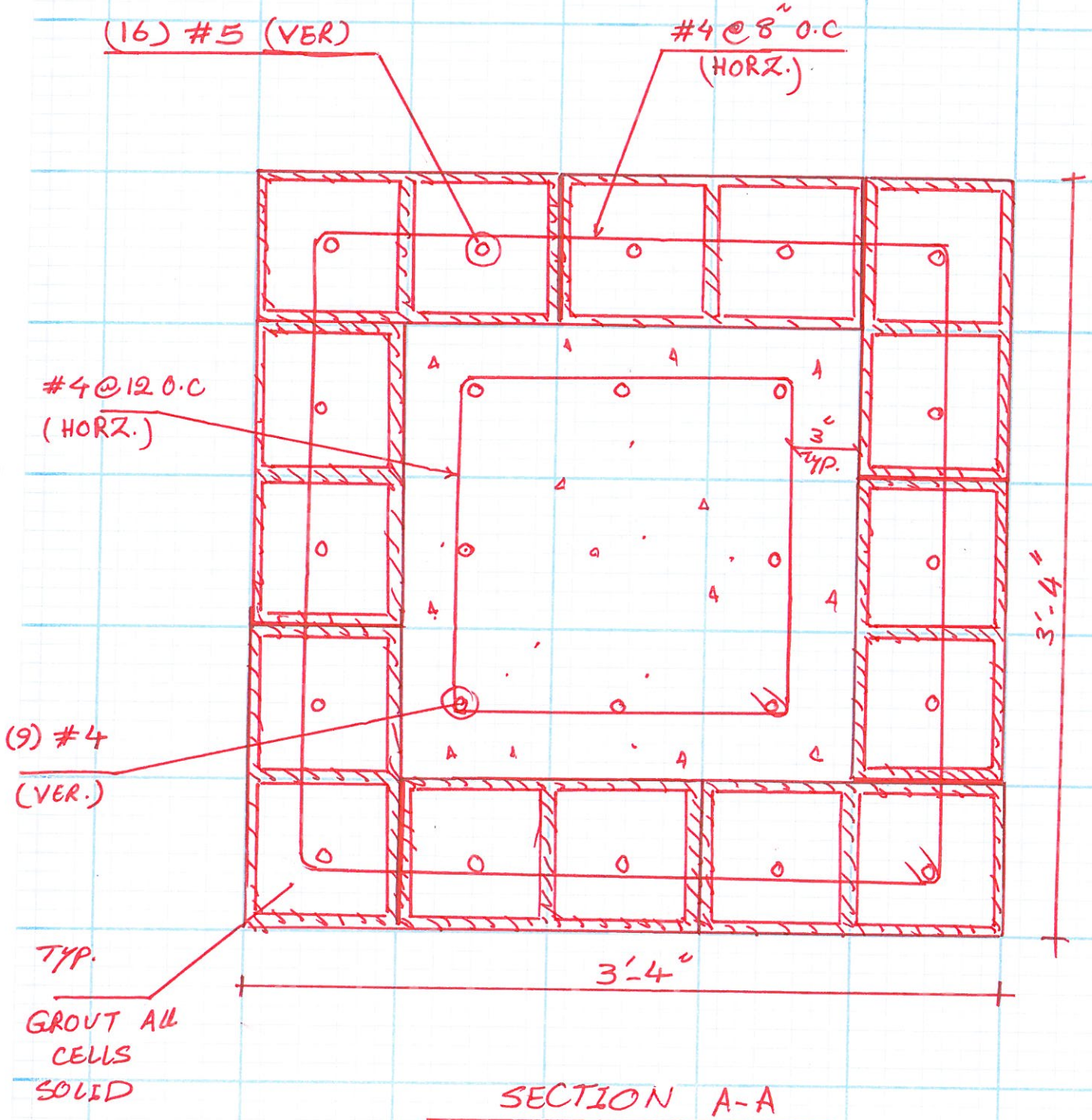
(16) #5 (VER)
#4 @ 8" O.C
(HORZ.)
#4 @ 12 O.C
(HORZ.)
3" TYP.
(9) #4
(VER.)
TYP.
GROUT ALL CELLS SOLID
3'-4"
3'-4"

SECTION A-A

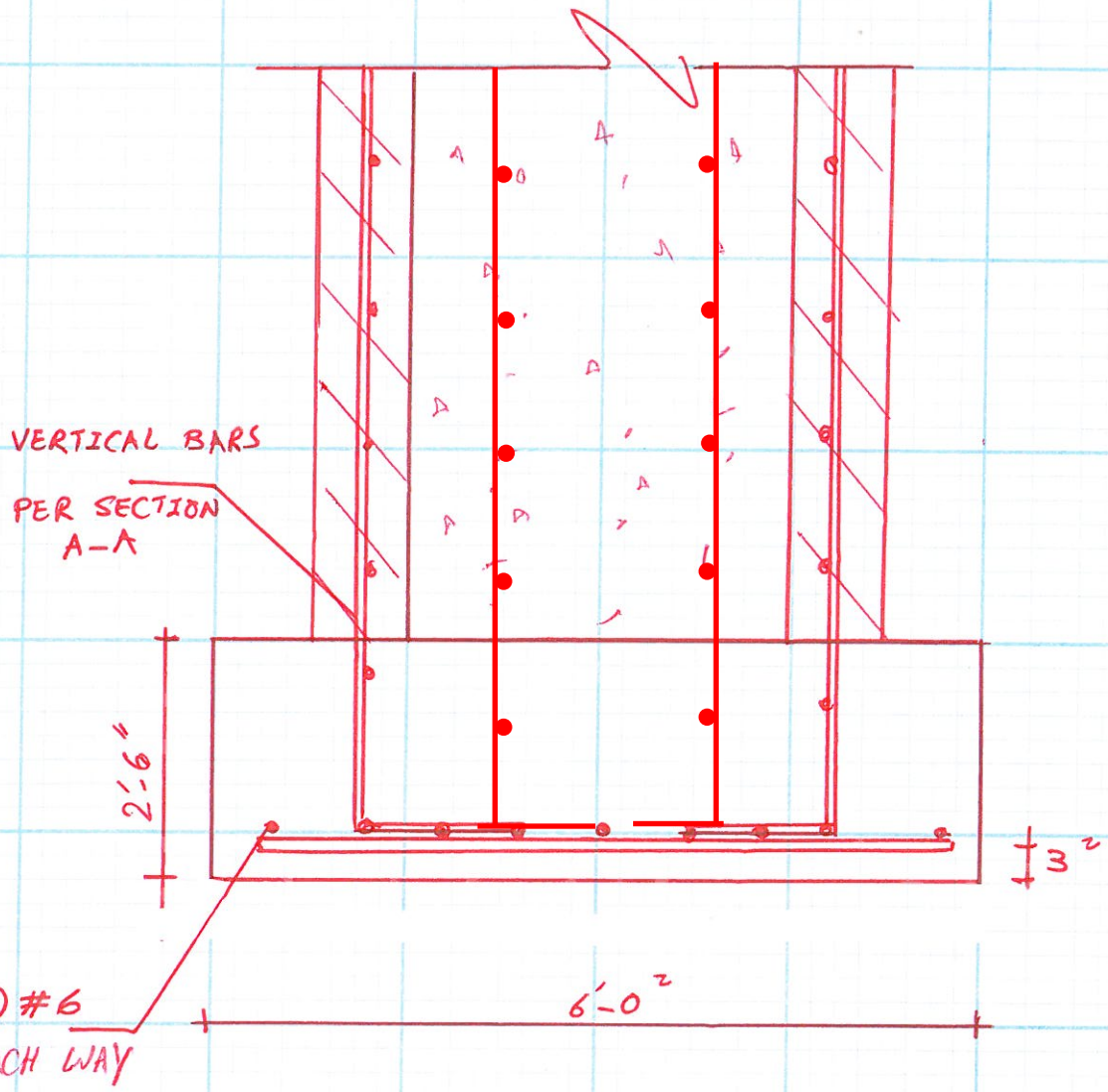

FOOTING SECTION

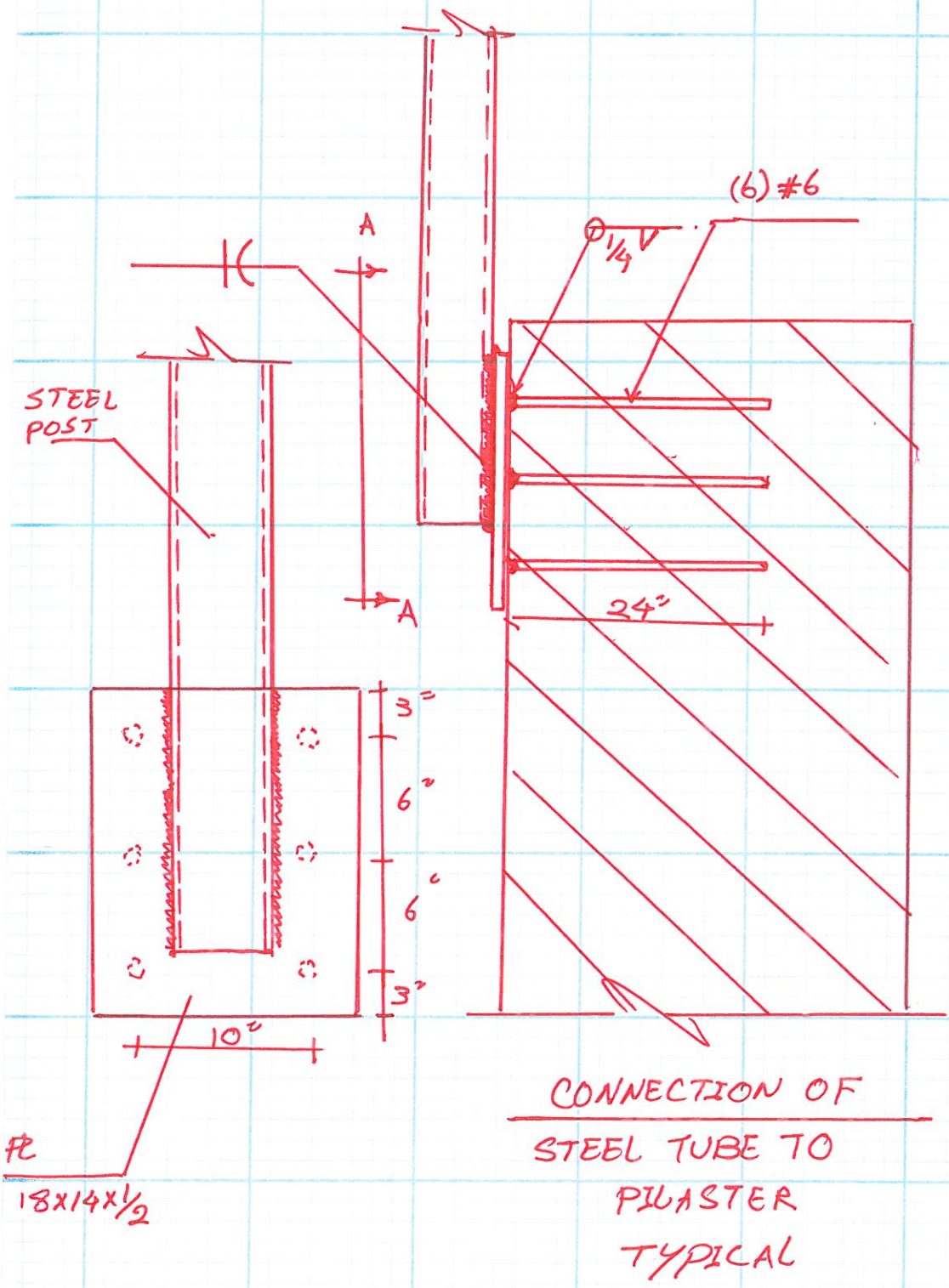

CONNECTION OF STEEL TUBE TO PILASTER TYPICAL

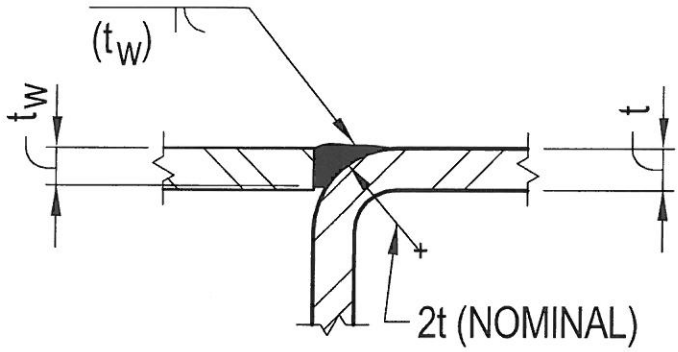

NOTE:
ALL WELDS SHALL BE FLARE-BEVEL AND (t_W) SHALL BE 1/16" LESS THAN THE THINNEST PART JOINED.

SECTION A-A

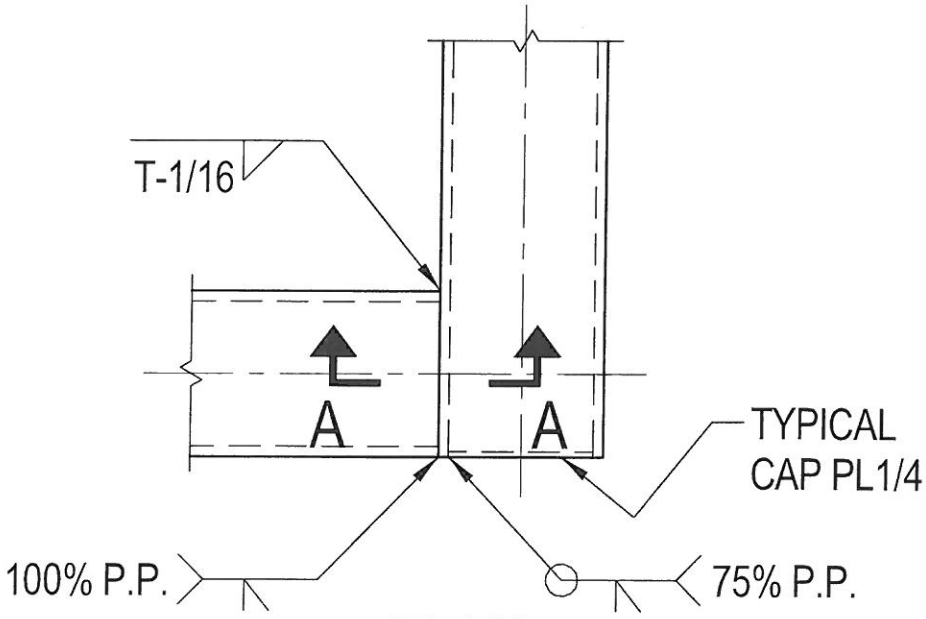

PLAN

TYPICAL
HSS TO HSS CONNECTION DETAIL

DESIGNING LIGHT POLE FOOTING

LIGHT POLE WEIGHT $\simeq 120$ lb (PER ELECTRICAL ENGINEER)

$F_p = \dfrac{0.4 a_p S_{DS} W_D}{R_p / I_p}$ SEISMIC

$S_{DS} = 0.982g$

$a_p = 2.5$

$R_p = 2.5$

$\Rightarrow F_p = \dfrac{0.4 \times 2.5 \times 0.982 \times 120}{2.5} = 47$ lb

$F_{p_{service}} = 34$ lb

$F = q_z \cdot G \cdot C_f \cdot A_f$ (ASCE 7-10 29.5-1) WIND LOAD

$q_z = 0.00256 K_z K_{zt} K_d \cdot V^2 \cdot I = 0.00256 \times 0.62 \times 0.85 \times 1.02 \times 110^2 = 16.7$ lb/ft^2

$K_z = 0.62$ $K_{zt} = 1.02$ $I = 1$

$K_d = 0.85$ $V = 110$ $C_f = 0.7$

$G = 0.85$

$A_f = \frac{6''}{12} \times 14 = 7$ sqf (14' POLE)

$\dfrac{F}{A_f} = 16.7 \times 0.85 \times 0.7 = 10 < 16$ $\rightarrow$ DISTRIBUTED $= \dfrac{16 \times 7}{14} = 8$ lb/ft

UNFACTORED $= \dfrac{8}{1.6} = 5$ lb/ft

MOMENT AT THE BASE FOR ANCHOR DESIGN

$M = (5 \times 14^2 + 50 \times 3) \times 12 = 13600 \approx 14{,}000$ lb in

HEAD OF LAMP

Pole Footing Embedded in Soil

Lic. # : KW-06009801 **Licensee : ENGLEKIRK**

Description : Pedestrian Light Pole Footing

Code References

Calculations per IBC 2012 1807.3, CBC 2013, ASCE 7-10
Load Combinations Used : ASCE 7-10

General Information

Pole Footing Shape	Circular
Footing Diameter	30.0 in
Calculate Min. Depth for Allowable Pressures	
No Lateral Restraint at Ground Surface	
Allow Passive	300.0 pcf
Max Passive	1,500.0 psf

Controlling Values

Governing Load Combination : +D+0.60W+H	
Lateral Load	0.1720 k
Moment	2.114 k-ft
NO Ground Surface Restraint	
Pressures at 1/3 Depth	
Actual	**296.353** psf
Allowable	**298.30** psf
Minimum Required Depth	**3.0 ft**
Footing Base Area	4.909 ft^2
Maximum Soil Pressure	0.02445 ksf

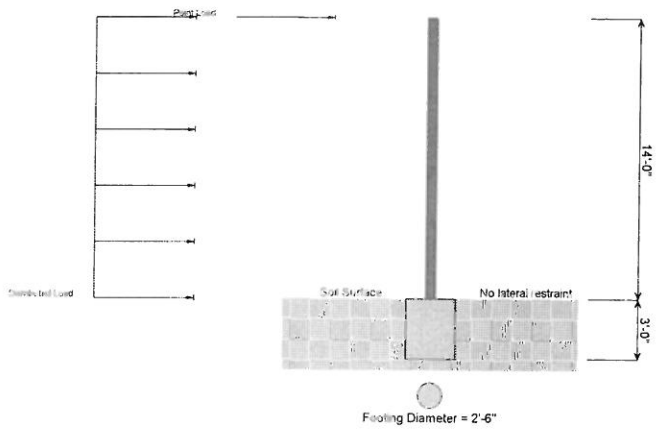

Applied Loads

Lateral Concentrated Load		Lateral Distributed Load	Vertical Load
D : Dead Load	0.10 k	k/ft	0.120 k
Lr : Roof Live	k	k/ft	k
L : Live	k	k/ft	k
S : Snow	k	k/ft	k
W : Wind	0.050 k	0.0050 k/ft	k
E : Earthquake	0.0350 k	k/ft	k
H : Lateral Earth	k	k/ft	k
Load distance above ground surface	14.0 ft	TOP of Load above ground surface 14.0 ft	
		BOTTOM of Load above ground surface ft	

Load Combination Results

Load Combination	Forces @ Ground Surface Loads - (k)	Moments - (ft-k)	Required Depth - (ft)	Pressure at 1/3 Depth Actual - (psf)	Allow - (psf)	Soil Increase Factor
+D+H	0.100	1.400	2.63	255.3	255.6	1.000
+D+L+H	0.100	1.400	2.63	255.3	255.6	1.000
+D+Lr+H	0.100	1.400	2.63	255.3	255.6	1.000
+D+S+H	0.100	1.400	2.63	255.3	255.6	1.000
+D+0.750Lr+0.750L+H	0.100	1.400	2.63	255.3	255.6	1.000
+D+0.750L+0.750S+H	0.100	1.400	2.63	255.3	255.6	1.000
+D+0.60W+H	0.172	2.114	3.00	296.4	298.3	1.000
+D+0.70E+H	0.125	1.743	2.88	274.4	276.7	1.000
+D+0.750Lr+0.750L+0.450W+H	0.154	1.936	3.00	286.8	288.7	1.000

+D+0.750L+0.750S+0.450W+H	0.154	1.936	3.00	286.8	288.7	1.000
+D+0.750L+0.750S+0.5250E+H	0.118	1.657	2.75	269.4	271.9	1.000
+0.60D+0.60W+0.60H	0.132	1.554	2.75	267.5	267.6	1.000
+0.60D+0.70E+0.60H	0.085	1.183	2.50	240.4	241.1	1.000

Company:		Page:	1
Specifier:		Project:	Village Pond Park
Address:		Sub-Project I Pos. No.:	Light Pole Footing
Phone I Fax:	|	Date:	7/12/2015
E-Mail:			

25

Specifier's comments: Anchor Bolts

1 Input data

Anchor type and diameter:	**Hex Head ASTM F 1554 GR. 55 3/4**
Effective embedment depth:	h_{ef} = 25.000 in.
Material:	ASTM F 1554
Proof:	Design method ACI 318-11 / CIP
Stand-off installation:	e_b = 0.000 in. (no stand-off); t = 0.500 in.
Anchor plate:	l_x x l_y x t = 18.000 in. x 18.000 in. x 0.500 in.; (Recommended plate thickness: not calculated)
Profile:	S shape (AISC); (L x W x T x FT) = 3.000 in. x 2.330 in. x 0.170 in. x 0.260 in.
Base material:	cracked concrete, 2500, f_c' = 2500 psi; h = 54.000 in.
Reinforcement:	tension: condition B, shear: condition B;
	edge reinforcement: none or < No. 4 bar

Geometry [in.] & Loading [lb, in.lb]

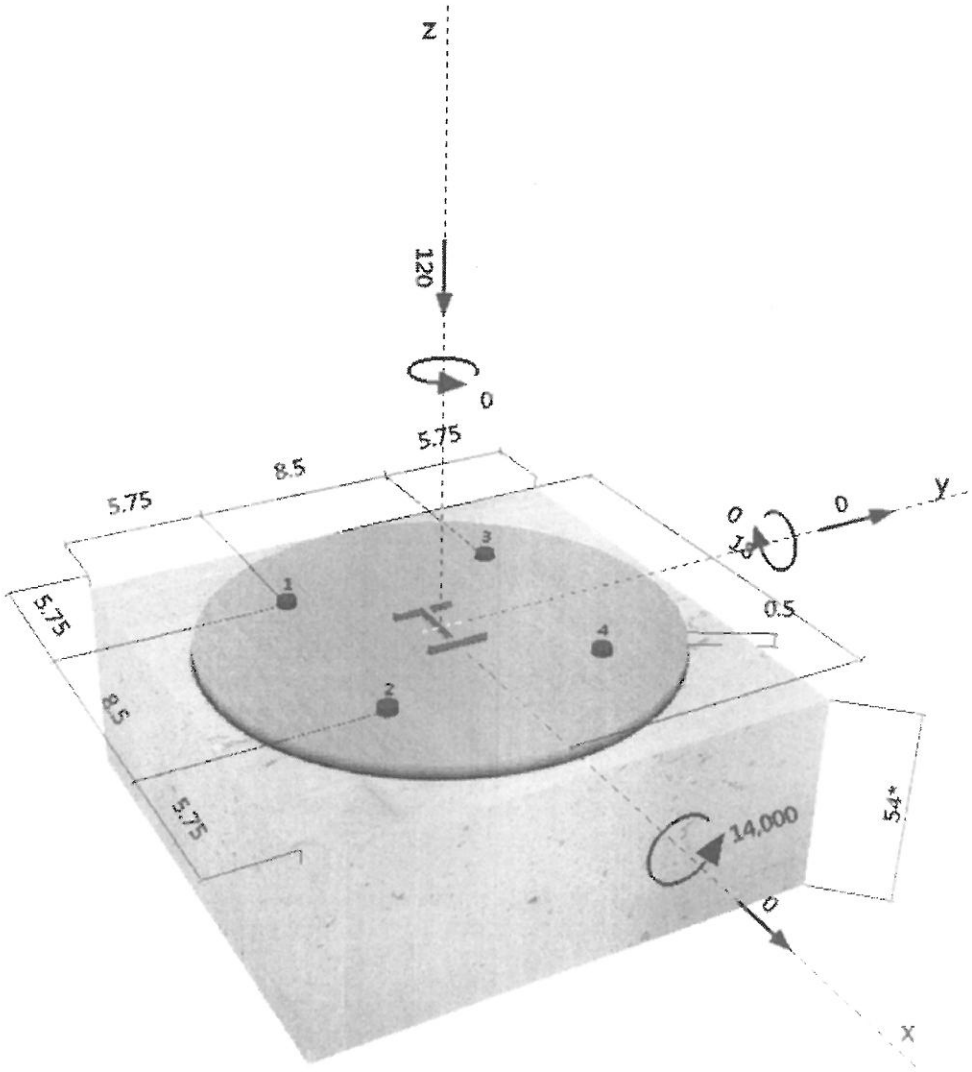

Company:		Page:	2
Specifier:		Project:	Village Pond Park
Address:		Sub-Project I Pos. No.:	Light Pole Footing
Phone I Fax:	|	Date:	7/12/2015
E-Mail:			

26

2 Load case/Resulting anchor forces

Load case: Design loads

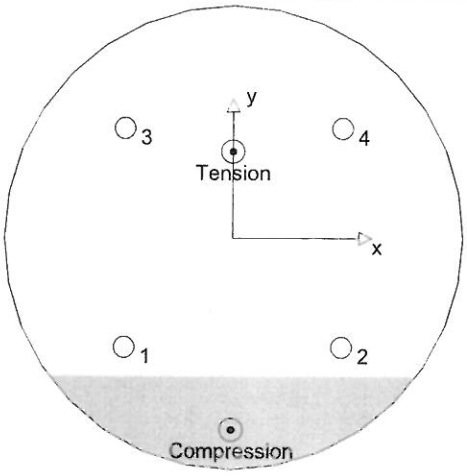

Anchor reactions [lb]

Tension force: (+Tension, -Compression)

Anchor	Tension force	Shear force	Shear force x	Shear force y
1	64	0	0	0
2	64	0	0	0
3	542	0	0	0
4	542	0	0	0

max. concrete compressive strain: 0.02 [‰]
max. concrete compressive stress: 91 [psi]
resulting tension force in (x/y)=(0.000/3.356): 1212 [lb]
resulting compression force in (x/y)=(0.000/-7.455): 1332 [lb]

3 Tension load

	Load N_{ua} [lb]	Capacity ϕN_n [lb]	Utilization $\beta_N = N_{ua}/\phi N_n$	Status
Steel Strength*	542	18787	3	OK
Pullout Strength*	542	9156	6	OK
Concrete Breakout Strength**	1212	12041	11	OK
Concrete Side-Face Blowout, direction y+**	1085	32456	4	OK

* anchor having the highest loading **anchor group (anchors in tension)

3.1 Steel Strength

$N_{sa} = n\, A_{se,N}\, f_{uta}$ ACI 318-11 Eq. (D-2)

$\phi\, N_{steel} \geq N_{ua}$ ACI 318-11 Table D.4.1.1

Variables

n	$A_{se,N}$ [in.^{2}]	f_{uta} [psi]
1	0.33	75000

Calculations

N_{sa} [lb]
25050

Results

N_{sa} [lb]	ϕ_{steel}	$\phi\, N_{sa}$ [lb]	N_{ua} [lb]
25050	0.750	18787	542

Input data and results must be checked for agreement with the existing conditions and for plausibility!
PROFIS Anchor (c) 2003-2009 Hilti AG, FL-9494 Schaan Hilti is a registered Trademark of Hilti AG, Schaan

Company:		Page:	3
Specifier:		Project:	Village Pond Park
Address:		Sub-Project I Pos. No.:	Light Pole Footing
Phone I Fax:	|	Date:	7/12/2015
E-Mail:			

27

3.2 Pullout Strength

$N_{pN} = \psi_{c,p} N_p$ ACI 318-11 Eq. (D-13)

$N_p = 8 A_{brg} f'_c$ ACI 318-11 Eq. (D-14)

$\phi N_{pN} \geq N_{ua}$ ACI 318-11 Table D.4.1.1

Variables

$\psi_{c,p}$	A_{brg} [in.^{2}]	λ_a	f'_c [psi]
1.000	0.65	1.000	2500

Calculations

N_p [lb]
13080

Results

N_{pn} [lb]	$\phi_{concrete}$	ϕN_{pn} [lb]	N_{ua} [lb]
13080	0.700	9156	542

3.3 Concrete Breakout Strength

$N_{cbg} = \left(\frac{A_{Nc}}{A_{Nc0}}\right) \psi_{ec,N}\, \psi_{ed,N}\, \psi_{c,N}\, \psi_{cp,N}\, N_b$ ACI 318-11 Eq. (D-4)

$\phi N_{cbg} \geq N_{ua}$ ACI 318-11 Table D.4.1.1

A_{Nc} see ACI 318-11, Part D.5.2.1, Fig. RD.5.2.1(b)

$A_{Nc0} = 9 h_{ef}^2$ ACI 318-11 Eq. (D-5)

$\psi_{ec,N} = \left(\frac{1}{1 + \frac{2 e'_N}{3 h_{ef}}}\right) \leq 1.0$ ACI 318-11 Eq. (D-8)

$\psi_{ed,N} = 0.7 + 0.3 \left(\frac{c_{a,min}}{1.5 h_{ef}}\right) \leq 1.0$ ACI 318-11 Eq. (D-10)

$\psi_{cp,N} = \text{MAX}\left(\frac{c_{a,min}}{c_{ac}}, \frac{1.5 h_{ef}}{c_{ac}}\right) \leq 1.0$ ACI 318-11 Eq. (D-12)

$N_b = k_c \lambda_a \sqrt{f'_c}\, h_{ef}^{1.5}$ ACI 318-11 Eq. (D-6)

Variables

h_{ef} [in.]	$e_{c1,N}$ [in.]	$e_{c2,N}$ [in.]	$c_{a,min}$ [in.]	$\psi_{c,N}$
3.833	0.000	3.356	5.750	1.000

c_{ac} [in.]	k_c	λ_a	f'_c [psi]
-	24	1.000	2500

Calculations

A_{Nc} [in.^{2}]	A_{Nc0} [in.^{2}]	$\psi_{ec1,N}$	$\psi_{ec2,N}$	$\psi_{ed,N}$	$\psi_{cp,N}$	N_b [lb]
400.00	132.25	1.000	0.631	1.000	1.000	9006

Results

N_{cbg} [lb]	$\phi_{concrete}$	ϕN_{cbg} [lb]	N_{ua} [lb]
17201	0.700	12041	1212

Input data and results must be checked for agreement with the existing conditions and for plausibility!
PROFIS Anchor (c) 2003-2009 Hilti AG, FL-9494 Schaan Hilti is a registered Trademark of Hilti AG, Schaan

Company:		Page:	4
Specifier:		Project:	Village Pond Park
Address:		Sub-Project I Pos. No.:	Light Pole Footing
Phone I Fax:	|	Date:	7/12/2015
E-Mail:			

28

3.4 Concrete Side-Face Blowout, direction y+

$N_{sb} = 160\, c_{a1} \sqrt{A_{brg}}\, \lambda_a \sqrt{f'_c}$ ACI 318-11 Eq. (D-16)

$N_{sbg} = \alpha_{group}\, N_{sb}$ ACI 318-11 Eq. (D-17)

$\phi\, N_{sbg} \geq N_{ua}$ ACI 318-11 Table (D.4.1.1)

$\alpha_{group} = \left(1 + \frac{s}{6\, c_{a1}}\right)$ see ACI 318-11, Part D.5.4.2 Eq. (D-17)

Variables

c_{a1} [in.]	c_{a2} [in.]	A_{brg} [in.^{2}]	λ_a	f'_c [psi]	s [in.]
5.750	5.750	0.65	1.000	2500	8.500

Calculations

α_{group}	N_{sb} [lb]
1.246	37200

Results

N_{sbg} [lb]	$\phi_{concrete}$	$\phi\, N_{sbg}$ [lb]	$N_{ua,edge}$ [lb]
46366	0.700	32456	1085

Input data and results must be checked for agreement with the existing conditions and for plausibility!
PROFIS Anchor (c) 2003-2009 Hilti AG, FL-9494 Schaan Hilti is a registered Trademark of Hilti AG, Schaan

Company:		Page:	5
Specifier:		Project:	Village Pond Park
Address:		Sub-Project I Pos. No.:	Light Pole Footing
Phone I Fax:	|	Date:	7/12/2015
E-Mail:			

29

4 Shear load

	Load V_{ua} [lb]	Capacity ϕV_n [lb]	Utilization $\beta_V = V_{ua}/\phi V_n$	Status
Steel Strength*	N/A	N/A	N/A	N/A
Steel failure (with lever arm)*	N/A	N/A	N/A	N/A
Pryout Strength*	N/A	N/A	N/A	N/A
Concrete edge failure in direction **	N/A	N/A	N/A	N/A

* anchor having the highest loading **anchor group (relevant anchors)

5 Warnings

- Load re-distributions on the anchors due to elastic deformations of the anchor plate are not considered. The anchor plate is assumed to be sufficiently stiff, in order not to be deformed when subjected to the loading! Input data and results must be checked for agreement with the existing conditions and for plausibility!
- Condition A applies when supplementary reinforcement is used. The Φ factor is increased for non-steel Design Strengths except Pullout Strength and Pryout strength. Condition B applies when supplementary reinforcement is not used and for Pullout Strength and Pryout Strength. Refer to your local standard.
- Checking the transfer of loads into the base material and the shear resistance are required in accordance with ACI 318 or the relevant standard!

Fastening meets the design criteria!

Input data and results must be checked for agreement with the existing conditions and for plausibility!
PROFIS Anchor (c) 2003-2009 Hilti AG, FL-9494 Schaan Hilti is a registered Trademark of Hilti AG, Schaan

Company:		Page:	6
Specifier:		Project:	Village Pond Park
Address:		Sub-Project I Pos. No.:	Light Pole Footing
Phone I Fax:	|	Date:	7/12/2015
E-Mail:			

30

6 Installation data

Anchor plate, steel: -
Profile: S shape (AISC); 3.000 x 2.330 x 0.170 x 0.260 in.
Hole diameter in the fixture: d_f = 0.813 in.
Plate thickness (input): 0.500 in.
Recommended plate thickness: not calculated
Cleaning: No cleaning of the drilled hole is required

Anchor type and diameter: Hex Head ASTM F 1554 GR. 55 3/4
Installation torque: -0.009 in.lb
Hole diameter in the base material: - in.
Hole depth in the base material: 25.000 in.
Minimum thickness of the base material: 27.000 in.

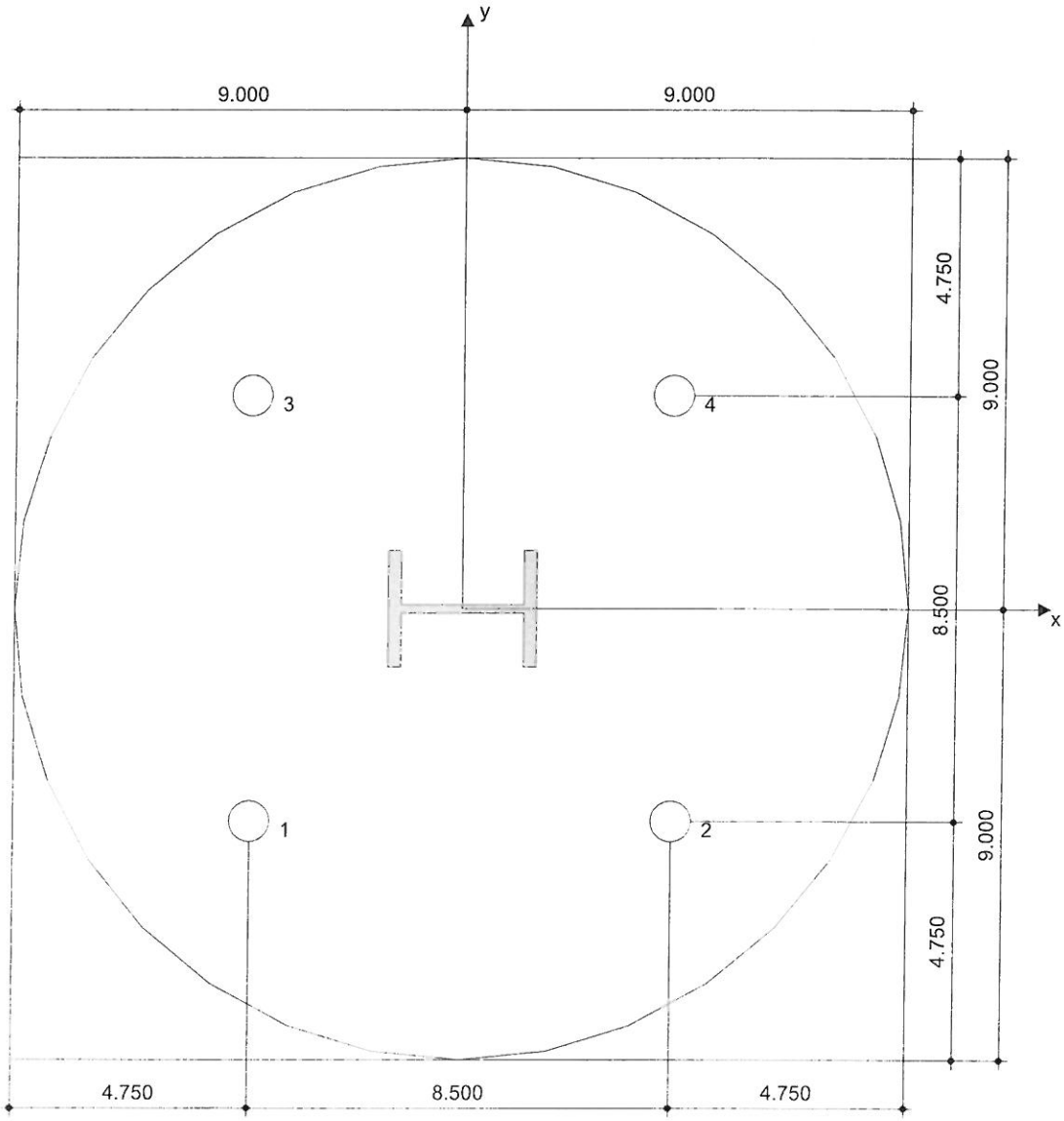

Coordinates Anchor in.

Anchor	x	y	c_{-x}	c_{+x}	c_{-y}	c_{+y}
1	-4.250	-4.250	5.750	14.250	5.750	14.250
2	4.250	-4.250	14.250	5.750	5.750	14.250
3	-4.250	4.250	5.750	14.250	14.250	5.750
4	4.250	4.250	14.250	5.750	14.250	5.750

Input data and results must be checked for agreement with the existing conditions and for plausibility!
PROFIS Anchor (c) 2003-2009 Hilti AG, FL-9494 Schaan Hilti is a registered Trademark of Hilti AG, Schaan

7 Remarks; Your Cooperation Duties

- Any and all information and data contained in the Software concern solely the use of Hilti products and are based on the principles, formulas and security regulations in accordance with Hilti's technical directions and operating, mounting and assembly instructions, etc., that must be strictly complied with by the user. All figures contained therein are average figures, and therefore use-specific tests are to be conducted prior to using the relevant Hilti product. The results of the calculations carried out by means of the Software are based essentially on the data you put in. Therefore, you bear the sole responsibility for the absence of errors, the completeness and the relevance of the data to be put in by you. Moreover, you bear sole responsibility for having the results of the calculation checked and cleared by an expert, particularly with regard to compliance with applicable norms and permits, prior to using them for your specific facility. The Software serves only as an aid to interpret norms and permits without any guarantee as to the absence of errors, the correctness and the relevance of the results or suitability for a specific application.
- You must take all necessary and reasonable steps to prevent or limit damage caused by the Software. In particular, you must arrange for the regular backup of programs and data and, if applicable, carry out the updates of the Software offered by Hilti on a regular basis. If you do not use the AutoUpdate function of the Software, you must ensure that you are using the current and thus up-to-date version of the Software in each case by carrying out manual updates via the Hilti Website. Hilti will not be liable for consequences, such as the recovery of lost or damaged data or programs, arising from a culpable breach of duty by you.

PROFIS Anchor (c) 2003-2009 Hilti AG, FL-9494 Schaan Hilti is a registered Trademark of Hilti AG, Schaan

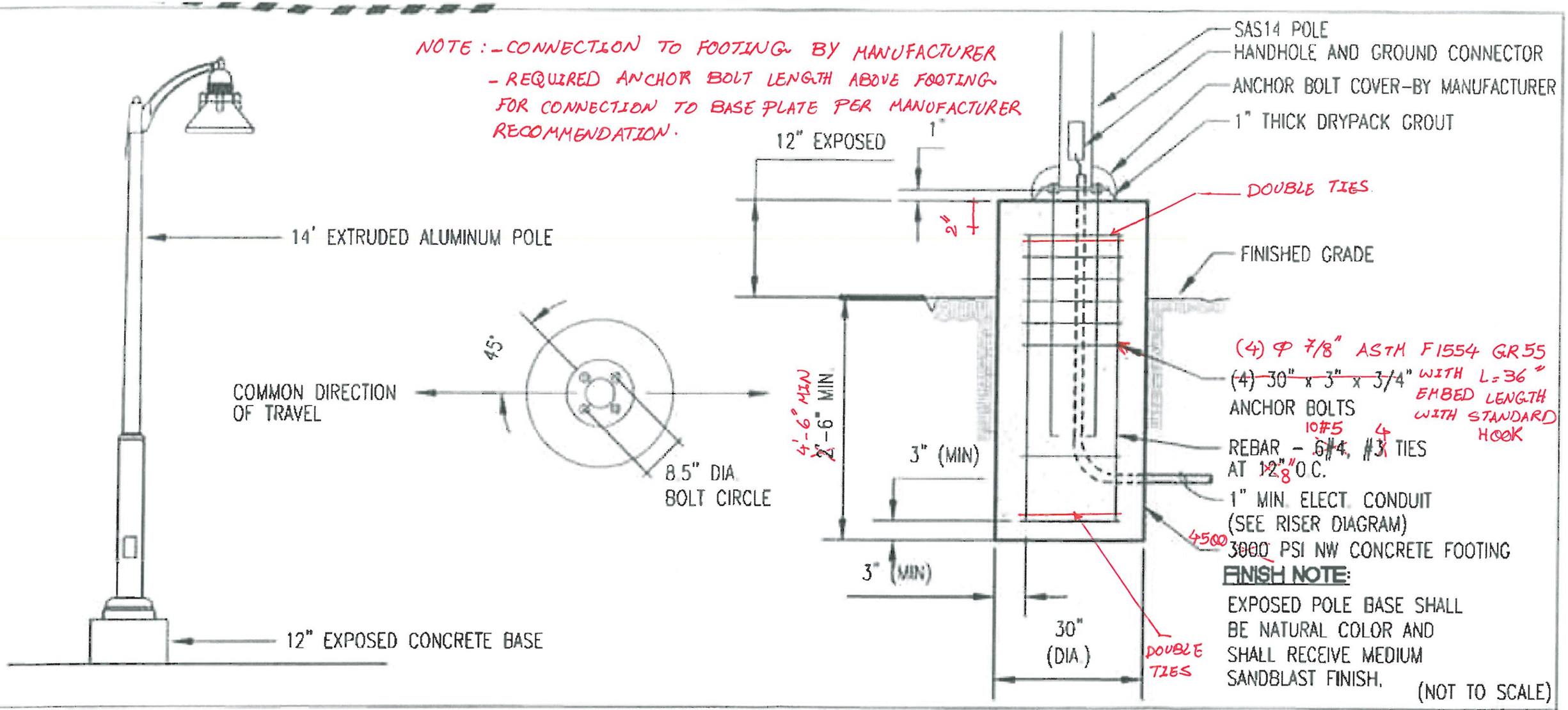

15' PEDESTRIAN (SINGLE LUMINAIRE) POLE BASE DETAIL

A

APPENDIX B
FLOATING ISLAND 350 SF

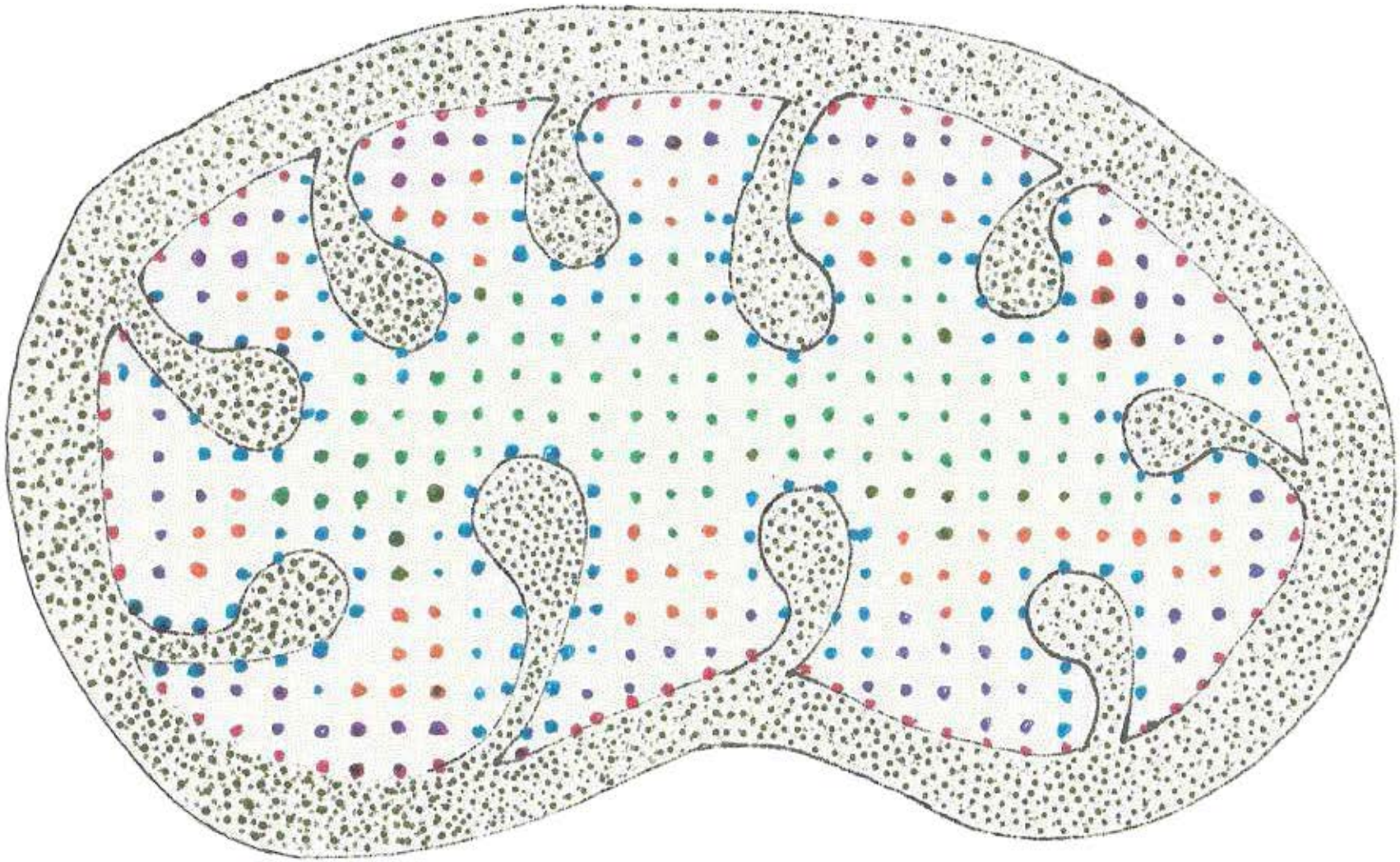

-GIANT RUSH & COMMON RUSH

-VETIVER

-IRISES

-FAIRY LILY

-GROUND COVER, EASYTURF

-CANA ZEPHYRANTHES CANDIDA

APPENDIX C
FLOATING ISLAND PLANT LIST

Floating Island -Village Pond Park
Planting List

Schoenoplectus californicus

Schoeneoplectus californicus is a species of sedge known by the common names California bulrush and giant bulrush. It is also sometimes called "Tule", but the closely related Schoenoplectus acutus is the more correct owner of that name.
Height 5 to 8 feet

Chrysopogon zizanioides (L.) - 'SUNSHINE' VETIVER GRASS

Vetiver grass has been shown to enhance the degradation of heavy metals such as aluminum, cadmium, chromium, copper, lead, and nickel and polycyclic aromatic hydrocarbons in soil. It can also degrade organics and used for wastewater treatment and rehabilitation of old mines.
USDA approved.
Height 5 to 8 feet

4712 Admiralty Way # 165 * Marina del Rey* Ca 90292* 310.397.3114* Fax 310.862.6708* e-mail: info@aquabio.us

Water Cana (Assorted) 3 to 6 feet

Water Irises (Assorted) - Height: up to 3 feet

Zephyranthes candida - Fairy lily, Height: 1 foot

Ground Cover - Easy Turf

Best draining artificial grass. AquaBio tested, withstands abuse of waterfowl and turtles on Floating Islands parameter.
https://www.youtube.com/watch?v=rPiptLLbaqs

APPENDIX D
FLOATING ISLAND HANDOUT

AquaBioEnvironmentalTechnologies
Helping Nature Heal Itself Since 1987

FLOATING TREATMENT WETLANDS

What are Floating Treatment Wetlands?

Floating Treatment Wetlands are islands of buoyant mats, made from a matrix of fibers which look like a pot-scrub or loofah. The matrix is water filtration material made from 100% recycled plastic, from drinking bottles, which use the most inert plastic available. Layers of matrix are bonded together with foam, which also provides buoyancy.

Floating Treatment Wetlands is an example of biomimicry, using nature's processes and systems to tackle environmental issues we face today. They are concentrated floating wetlands, inspired by the floating peat bogs of Northern Wisconsin, which are associated with clean water and

What do they do?

Remove pollutants, including nitrates, phosphates, ammonia and heavy metals.
Provide critical riparian edge habitat - in fact, new land mass for use by all kinds of creatures, from microbes to humans.
Sequester carbon and other greenhouse gases.
Provide wave mitigation and erosion control.
Beautify waterscapes.

How do they do it?

Floating Treatment Wetlands are planted with sod, garden or wetland plants and launched onto a water body. The plants are allowed to grow naturally, and as they develop, their roots grow through the matrix and into the water below. Over time, a natural eco-system evolves.

The Floating Treatment Wetlands and the plants that grow through them, provide surface area for microbes to thrive. Microbes remove pollutants of all kinds, from the nutrients caused by fertilizer run-off and organic waste, to pharmaceuticals such as estrogen, to heavy metals, such as copper and zinc. Through this natural process bacteria degrade potentially hazardous substances into ones that are less toxic or non-toxic. Augmentation of this process with microbial formulations increases naturally occurring bacterial population resulting in remediation.

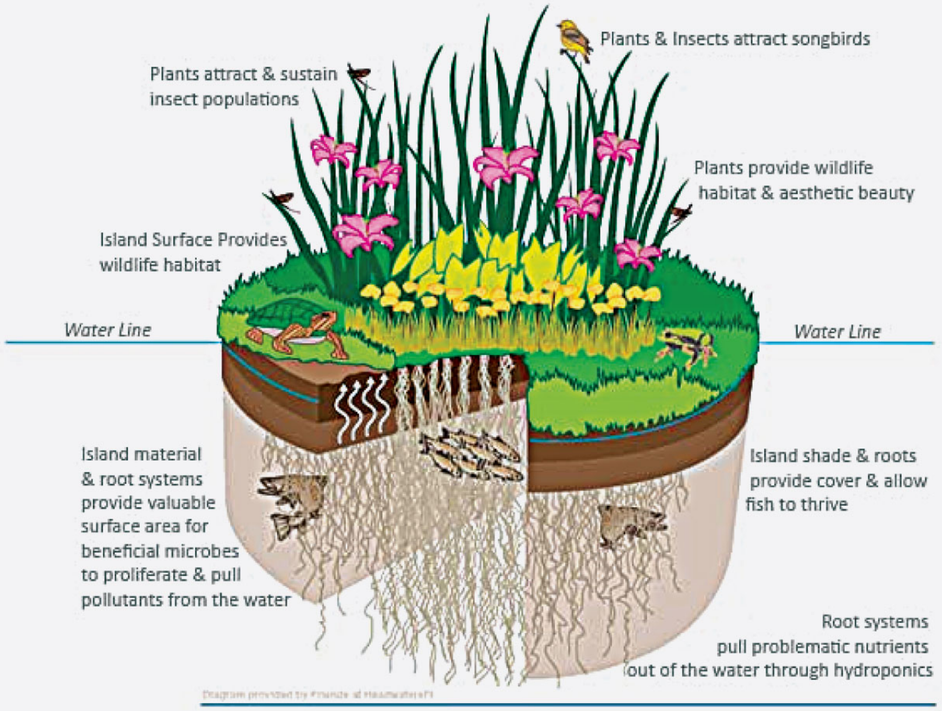

Natural floating islands, also called sudds, tussocks, floatons, or embalsados, are typically composed of floating vegetation, or peat, or both, along with mud, and may attain substantial thickness and longevity, sustain abundant riparian vegetation, and provide habitat for high densities of fishes. Floating Treatment Wetlands are a form of Biomemetics.

Above: Nature's Matrix

Above: BioHaven Matrix

About The Matrix

Expanded, a 250 sq ft island is the equivalent of 1 acre of wetland surface area, creating a "concentrated wetland effect". Surface area is the key factor for microbial activity to take place, and microbes (bacteria) are the key to removing contaminants from the water, which is augmented by the plants and their roots.

Cost

Standard 8 "(thickness) Island:
$35.00 per square foot

Bio Mix:
$1.00 per square foot

Rockwool:
$1.00 per square foot

Prices are approximate, and subject to change based on size, buoyancy, deployment and flora requirements and do not include tax and shipping

2009 © AquaBio Environmental Technologies, Inc.

4712 Admiralty Way, #156, Marina Del Rey, California, 90292 USA | Phone: 310.397.3114 | Fax: 310.862.6708 | E-mail: info@aquabio.us

For more information on Floating Treatment Wetlands, contact us - info@aquabio.us - 310.397.3114.

Where can you use Floating Treatment Wetlands?

Floating Wetlands can be launched into any waterway, be it pond, lake, stream, effluent pond, lagoon, embayment - any waterway will benefit from a floating island, even the ocean.

They can be made into virtually any shape or size and are usually anchored or tethered in place, though they can be left to float around freely.

Research

Floating Treatment Wetlands were invented eight years ago, have been successfully trialed for five years and have been on the market since July 2005. They represent a natural, convenient and cost-effective solution for some of the most intractable and expensive problems on the planet:

- Polishing wastewater and storm water of nutrients and heavy metals to return it safely to the watershed.
- Sequestering carbon dioxide and methane from effluent ponds
- Wave mitigation and protection of levees in the event of severe storms.
- Extraction of salt
- Mining nutrient loads from any waterway and reducing algal blooms
- Restoring wetlands without the need for new land
- Restoring habitat for endangered species such as the trumpeter swan

Research studies show that, under optimal test conditions, Floating Treatment Wetlands remove:

- 20 times more nitrate than the best previously published study per square foot (BoR, 2005),
- 10 times more phosphate, and
- 11 times more ammonia than the amount which is considered a benchmark for best performance.

Floating Treatment Wetlands are also extremely effective at reducing Total Suspended Solids(TSS), turbidity and Dissolved Organic Carbon(DOC).

Reading Material

NZWWA - water & wastes in New Zealand, issue 155, July 2008. Article by Dr Chris C Tanner and Dr Tom Headley Floating treatment wetlands - an innovative solution to enhance removal of fine particulates, copper and zinc.

http://floatingislandinternational.com/pdf/NIWA-Article.pdf

Land Contamination & Reclamation, 16 (1), 2008 - 2008 EPP Publications Ltd. Floating islands as an alternative to constructed wetlands for treatment of excess nutrients from agricultural and municipal wastes - results of laboratory-scale tests. Frank M. Stewart, Tim Mulholland, Alfred B. Cunningham, Bruce G. Kania and Mark T.Osterlund

http://floatingislandinternational.com/pdf/Franks-article.pdf

100% Recycled PET

The Floating Treatment Wetland's matrix is constructed using 100% RECYCLED PET Plastic…this means it's certified non-toxic, it's from recycled drinking bottles.

After the plastic undergoes the recycling & spinning process, it is then turned into a MATRIX of fibers composed of layers of a durable synthetic mesh. The matrix design resembles a pot-scrub or loofah which is important as it serves as a water filtration design.

During production of Floating Treatment Wetlands, the plastic matrix is cut to shape & bonded together with buoyant adhesive foam.

2009 © AquaBio Environmental Technologies, Inc.

HelpingNature**Heal**Itself**Since**1987

AquaBioEnvironmentalTechnologies
Helping Nature Heal Itself Since 1987

www.aquabio.us

4712 Admiralty Way, #156, Marina Del Rey, California, 90292 USA | Phone: 310.397.3114 | Fax: 310.862.6708 | E-mail: info@aquabio.us

APPENDIX E
BRIDGE ABUTMENT CALCULATIONS

Structural Calculations

Village Pond Park

Lake Forest, CA
Bridge Abutment

Submitted to:
Department of Building and Safety
City of Lake Forest, CA

Date 07-27-2015

Job No. 15-S012B

REGISTERED PROFESSIONAL ENGINEER
ASHIN TONY GHOSS
No. 3248
STRUCTURAL
STATE OF CALIFORNIA

Englekirk
STRUCTURAL ENGINEERS

3621 Harbor Boulevard, Suite 125
Santa Ana, CA 92704

714.557.8551 T
714.557.5530 F

www.englekirk.com

These calculations are reproduced here only for submittal to the governing building authority to assist in obtaining a building permit. Any reproduction or distribution is expressly forbidden. Any calculations without a cover sheet, wet stamp, and signature are unauthorized and cannot be used for any purpose. Computations involving scientific principle only serve as a guide for the experienced engineer and to assist in making engineering decisions. The final design is reflected only in the construction documents.

Village Pond Park
Bridge Abutment
Lake Forest, California

TABLE OF CONTENTS

JOB NUMBER: 15-S012B

Entry Overhead Structure

- Bridge Abutment Design ..... 1 - 38
- Reinforcing Plan 39

Cantilevered Retaining Wall

File = c:\Users\Jingjing\Desktop\VILLAG~2.EC6
ENERCALC, INC. 1983-2015, Build 6.15.4.11, Ver 6.15.4.11

Lic. # : KW-06009801 — Licensee : ENGLEKIRK

Description : Closure Wall Design

Calculations per ACI 318-11, ACI 530-11, IBC 2012, CBC 2013, ASCE 7-10

Criteria

1'-3 1/8"

Retained Height	=	1.26 ft
Wall height above soil	=	0.00 ft
Slope Behind Wall	=	0.00 : 1
Height of Soil over Toe	=	0.00 in
Water height over heel	=	0.0 ft

Vertical component of active
Lateral soil pressure options:
NOT USED for Soil Pressure.
NOT USED for Sliding Resistance.
NOT USED for Overturning Resistance.

Soil Data

Allow Soil Bearing	=	1,500.0 psf
Equivalent Fluid Pressure Method		
Heel Active Pressure	=	50.0 psf/ft
Toe Active Pressure	=	50.0 psf/ft
Passive Pressure	=	300.0 psf/ft
Soil Density, Heel	=	100.00 pcf
Soil Density, Toe	=	100.00 pcf
Friction Coeff btwn Ftg & Soil	=	0.350
Soil height to ignore for passive pressure	=	0.00 in

Fictitious loading since it's a design for closure wall.

Surcharge Loads

Surcharge Over Heel	=	300.0 psf
NOT Used To Resist Sliding & Overturning		
Surcharge Over Toe	=	0.0 psf
NOT Used for Sliding & Overturning		

Lateral Load Applied to Stem

Lateral Load	=	0.0 plf
...Height to Top	=	3.10 ft
...Height to Bottom	=	3.00 ft
Wind on Exposed Stem	=	0.0 psf

Adjacent Footing Load

Adjacent Footing Load	=	0.0 lbs
Footing Width	=	0.00 ft
Eccentricity	=	0.00 in
Wall to Ftg CL Dist	=	0.00 ft
Footing Type		Line Load
Base Above/Below Soil at Back of Wall	=	0.0 ft
Poisson's Ratio	=	0.300

Axial Load Applied to Stem

Axial Dead Load	=	0.0 lbs
Axial Live Load	=	0.0 lbs
Axial Load Eccentricity	=	0.0 in

Design Summary

Wall Stability Ratios

Overturning	=	1.13	Ratio < 1.5!
Sliding	=	1.54	OK
Slab Resists All Sliding !			
Total Bearing Load	=	1,357 lbs	
...resultant ecc.	=	13.73 in	
Soil Pressure @ Toe	=	6,154 psf	NG
Soil Pressure @ Heel	=	0 psf	OK
Allowable	=	1,500 psf	
Soil Pressure Exceeds Allowable!			
ACI Factored @ Toe	=	7,385 psf	
ACI Factored @ Heel	=	0 psf	
Footing Shear @ Toe	=	0.0 psi	OK
Footing Shear @ Heel	=	5.4 psi	OK
Allowable	=	82.2 psi	

Sliding Calcs Slab Resists All Sliding !

Lateral Sliding Force	=	917.4 lbs
less 100% Passive Force	= -	937.5 lbs
less 100% Friction Force	= -	476.0 lbs
Added Force Req'd	=	0.0 lbs OK
....for 1.5 : 1 Stability	=	0.0 lbs OK

Load Factors

Dead Load	1.200
Live Load	1.600
Earth, H	1.600
Wind, W	1.000
Seismic, E	1.000

Stem Construction

Top Stem

		Stem OK
Design Height Above Ftg	ft =	0.00
Wall Material Above "Ht"	=	Concrete
Thickness	in =	12.00
Rebar Size	=	# 5
Rebar Spacing	in =	16.00
Rebar Placed at	=	User Spec
Design Data		
fb/FB + fa/Fa	=	0.022
Total Force @ Section	lbs =	365.9
Moment....Actual	ft-l =	217.2
Moment.....Allowable	ft-l =	9,700.2
Shear.....Actual	psi =	3.2
Shear.....Allowable	psi =	82.2
Wall Weight	psf =	150.0
Rebar Depth 'd'	in =	9.50
Lap splice if above	in =	21.36
Lap splice if below	in =	9.59
Hook embed into footing	in =	9.59
Concrete Data		
f'c	psi =	3,000.0
Fy	psi =	

Min As, 2 layers.

DCR = 0.022

DCR = 0.039

IGNORE THIS DESIGN

Cantilevered Retaining Wall

File = c:\Users\Jingjing\Desktop\VILLAG~2.EC6
ENERCALC, INC. 1983-2015, Build:6.15.4.11, Ver:6.15.4.11

Lic. # : KW-06009801 Licensee : ENGLEKIRK

Description : Closure Wall Design

IGNORE THIS DESIGN

Footing Dimensions & Strengths

Toe Width	=	0.00 ft
Heel Width	=	~~2.58~~ 2'-7"
Total Footing Width	=	2.58
Footing Thickness	=	30.00 in
Key Width	=	0.00 in
Key Depth	=	0.00 in
Key Distance from Toe	=	0.00 ft

f'c = 3,000 psi Fy = 60,000 psi
Footing Concrete Density = 150.00 pcf
Min. As % = 0.0018
Cover @ Top 3.00 @ Btm.= 3.00 in

Footing Design Results

		Toe	Heel	
Factored Pressure	=	7,385	0	psf
Mu' : Upward	=	0	0	ft-lb
Mu' : Downward	=	0	0	ft-lb
Mu: Design	=	0	217	ft-lb
Actual 1-Way Shear	=	0.00	5.38	psi
Allow 1-Way Shear	=	0.00	82.16	psi

Toe Reinforcing = # 4 @ 16.00 in
Heel Reinforcing = # 4 @ 16.00 in
Key Reinforcing = None Spec'd

Other Acceptable Sizes & Spacings

Toe: Not req'd, Mu < S * Fr
Heel: Not req'd, Mu < S * Fr
Key: No key defined

Summary of Overturning & Resisting Forces & Moments

Item		.....OVERTURNING..... Force lbs	Distance ft	Moment ft-lb
Heel Active Pressure	=	353.4	1.25	443.0
Surcharge over Heel	=	564.0	1.88	1,060.3
Toe Active Pressure	=			
Surcharge Over Toe	=			
Adjacent Footing Load	=			
Added Lateral Load	=			
Load @ Stem Above Soil	=			
Total	=	917.4	**O.T.M.** =	1,503.3

Resisting/Overturning Ratio = **1.13**
Vertical Loads used for Soil Pressure = 1,357.1 lbs

		.....RESISTING..... Force lbs	Distance ft	Moment ft-lb
Soil Over Heel	=	199.5	1.79	357.3
Sloped Soil Over Heel	=			
Surcharge Over Heel	=			
Adjacent Footing Load	=			
Axial Dead Load on Stem	=			
* Axial Live Load on Stem	=			
Soil Over Toe	=			
Surcharge Over Toe	=			
Stem Weight(s)	=	189.0	0.50	94.5
Earth @ Stem Transitions	=			
Footing Weight	=	968.6	1.29	1,251.0
Key Weight	=			
Vert. Component	=			
Total =		1,357.1 lbs	**R.M. =**	1,702.8

* Axial live load NOT included in total displayed, or used for overturning resistance, but is included for soil pressure calculation.

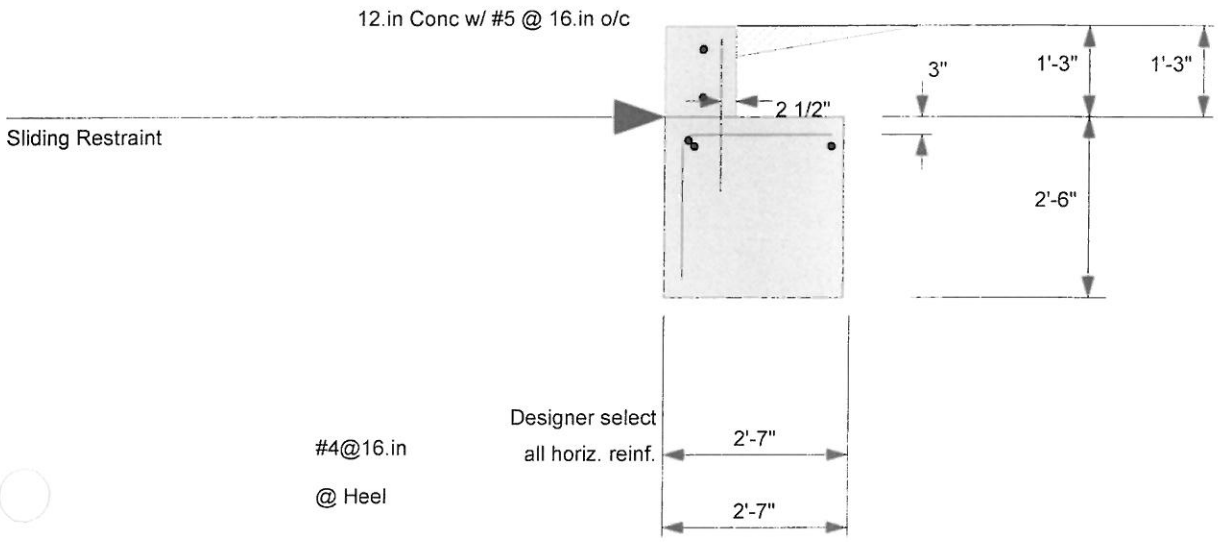
12.in Conc w/ #5 @ 16.in o/c
Sliding Restraint
2 1/2"
3"
1'-3"
1'-3"
2'-6"
Designer select
all horiz. reinf.
#4@16.in
@ Heel
2'-7"
2'-7"

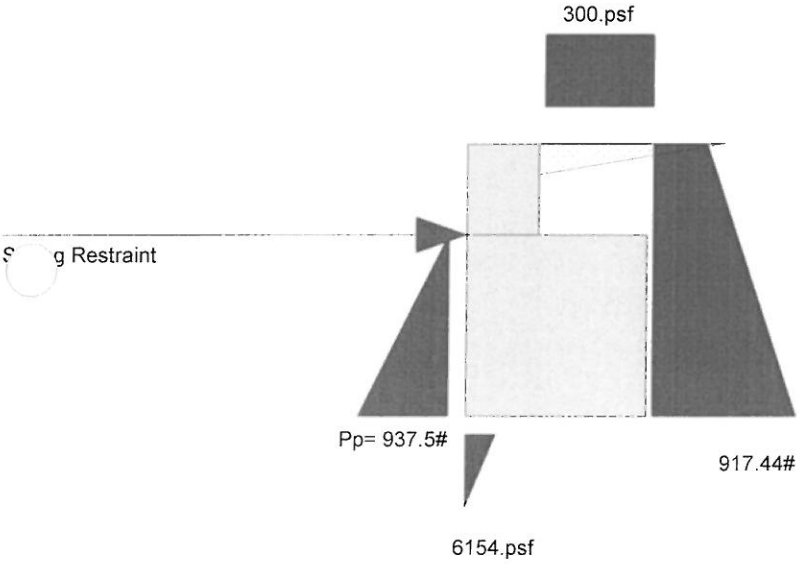
300.psf
g Restraint
Pp= 937.5#
917.44#
6154.psf

LOAD COMBO:
Strength: 1.2D + 1.6L + 1.6H
Service: D + L + H

5

Cantilevered Retaining Wall

File = R:\10VOB8~Y\VNZUG4~O.EC6
ENERCALC, INC. 1983-2015, Build 6.15.4.11, Ver 6.15.4.11

Lic. # : KW-06009801 Licensee : ENGLEKIRK

Description : Abutment and Footing Design-Gravity

Calculations per ACI 318-11, ACI 530-11, IBC 2012, CBC 2013, ASCE 7-10

Criteria

Retained Height	=	3.25 ft
Wall height above soil	=	0.00 ft
Slope Behind Wall	=	0.00 : 1
Height of Soil over Toe	=	0.00 in
Water height over heel	=	0.0 ft

Vertical component of active
Lateral soil pressure options:
NOT USED for Soil Pressure.
NOT USED for Sliding Resistance.
NOT USED for Overturning Resistance.

Soil Data

Allow Soil Bearing	=	1,250.0 psf
Equivalent Fluid Pressure Method		
Heel Active Pressure	=	50.0 psf/ft
Toe Active Pressure	=	50.0 psf/ft
Passive Pressure	=	300.0 psf/ft
Soil Density, Heel	=	100.00 pcf
Soil Density, Toe	=	100.00 pcf
Friction Coeff btwn Ftg & Soil	=	0.350
Soil height to ignore for passive pressure	=	0.00 in

Surcharge Loads

Surcharge Over Heel	=	0.0 psf
NOT Used To Resist Sliding & Overturning		
Surcharge Over Toe	=	0.0 psf
NOT Used for Sliding & Overturning		

Lateral Load Applied to Stem

Lateral Load	=	0.0 plf
...Height to Top	=	3.25 ft
...Height to Bottom	=	3.00 ft
Wind on Exposed Stem	=	0.0 psf

Adjacent Footing Load

Adjacent Footing Load	=	0.0 lbs
Footing Width	=	0.00 ft
Eccentricity	=	0.00 in
Wall to Ftg CL Dist	=	0.00 ft
Footing Type		Line Load
Base Above/Below Soil at Back of Wall	=	0.0 ft
Poisson's Ratio	=	0.300

Axial Load Applied to Stem

Axial Dead Load	=	500.0 lbs
Axial Live Load	=	1,662.0 lbs
Axial Load Eccentricity	=	0.0 in

Design Summary

Wall Stability Ratios

Overturning	=	44.03 OK ←
Sliding	=	5.53 OK ←
Total Bearing Load	=	12,040 lbs
...resultant ecc.	=	12.74 in
Soil Pressure @ Toe	=	1,251 psf NG OK.
Soil Pressure @ Heel	=	469 psf OK ←
Allowable	=	1,250 psf
Soil Pressure Exceeds Allowable!		
ACI Factored @ Toe	=	1,571 psf
ACI Factored @ Heel	=	588 psf
Footing Shear @ Toe	=	0.0 psi OK ←
Footing Shear @ Heel	=	26.4 psi OK ←
Allowable	=	82.2 psi

Sliding Calcs (Vertical Component NOT Used)

Lateral Sliding Force	=	826.6 lbs
less 100% Passive Force	= -	937.5 lbs
less 100% Friction Force	= -	3,630.0 lbs
Added Force Req'd	=	0.0 lbs OK ←
....for 1.5 : 1 Stability	=	0.0 lbs OK ←

Load Factors

Dead Load	1.200
Live Load	1.600
Earth, H	1.600
Wind, W	1.000
Seismic, E	1.000

Stem Construction

Top Stem

		Stem OK
Design Height Above Ftg	ft =	0.00
Wall Material Above "Ht"	=	Concrete
Thickness	in =	48.00
Rebar Size	=	# 8 ← As,min.
Rebar Spacing	in =	12.00
Rebar Placed at	=	Edge
Design Data		
fb/FB + fa/Fa	=	0.003
Total Force @ Section	lbs =	422.5
Moment....Actual	ft-l =	457.7
Moment.....Allowable	ft-l =	158,990.9
Shear.....Actual	psi =	0.8
Shear.....Allowable	psi =	82.2
Wall Weight	psf =	424.0
Rebar Depth 'd'	in =	45.50
Lap splice if above	in =	42.94
Lap splice if below	in =	15.34
Hook embed into footing	in =	15.34
Concrete Data		
f'c	psi =	3,000.0
Fy	psi =	

Cantilevered Retaining Wall

File = R:\10VOB8~Y\VNZUG4~O.EC6
ENERCALC, INC. 1983-2015, Build 6.15.4.11, Ver 6.15.4.11

Lic. # : KW-06009801 Licensee : ENGLEKIRK

Description : Abutment and Footing Design-Gravity

Footing Dimensions & Strengths

Toe Width	=	0.00 ft
Heel Width	=	14.00
Total Footing Width	=	14.00
Footing Thickness	=	30.00 in
Key Width	=	0.00 in
Key Depth	=	0.00 in
Key Distance from Toe	=	0.00 ft

f'c = 3,000 psi Fy = 60,000 psi
Footing Concrete Density = 150.00 pcf
Min. As % = 0.0018
Cover @ Top 3.00 @ Btm.= 3.00 in

Footing Design Results

		Toe	Heel	
Factored Pressure	=	1,571	588	psf
Mu' : Upward	=	0	0	ft-lb
Mu' : Downward	=	0	0	ft-lb
Mu: Design	=	0	458	ft-lb
Actual 1-Way Shear	=	0.00	26.42	psi
Allow 1-Way Shear	=	0.00	82.16	psi

Toe Reinforcing = # 6 @ 16.00 in
Heel Reinforcing = # 6 @ 16.00 in ← As,min
Key Reinforcing = None Spec'd

Other Acceptable Sizes & Spacings

Toe: Not req'd, Mu < S * Fr
Heel: Not req'd, Mu < S * Fr
Key: No key defined

Summary of Overturning & Resisting Forces & Moments

Item		.....OVERTURNING..... Force lbs	Distance ft	Moment ft-lb
Heel Active Pressure	=	826.6	1.92	1,584.2
Surcharge over Heel	=			
Toe Active Pressure	=			
Surcharge Over Toe	=			
Adjacent Footing Load	=			
Added Lateral Load	=			
Load @ Stem Above Soil	=			
Total	=	826.6	**O.T.M.** =	1,584.2

Resisting/Overturning Ratio = 44.03 OK.
Vertical Loads used for Soil Pressure = 12,040.0 lbs

		.....RESISTING..... Force lbs	Distance ft	Moment ft-lb
Soil Over Heel	=	3,250.0	9.00	29,250.0
Sloped Soil Over Heel	=			
Surcharge Over Heel	=			
Adjacent Footing Load	=			
Axial Dead Load on Stem	=	500.0	2.00	1,000.0
* Axial Live Load on Stem	=	1,662.0	2.00	3,324.0
Soil Over Toe	=			
Surcharge Over Toe	=			
Stem Weight(s)	=	1,378.0	2.00	2,756.0
Earth @ Stem Transitions	=			
Footing Weight	=	5,250.0	7.00	36,750.0
Key Weight	=			
Vert. Component	=			
Total =		10,378.0 lbs	**R.M. =**	69,756.0

* Axial live load NOT included in total displayed, or used for overturning resistance, but is included for soil pressure calculation.

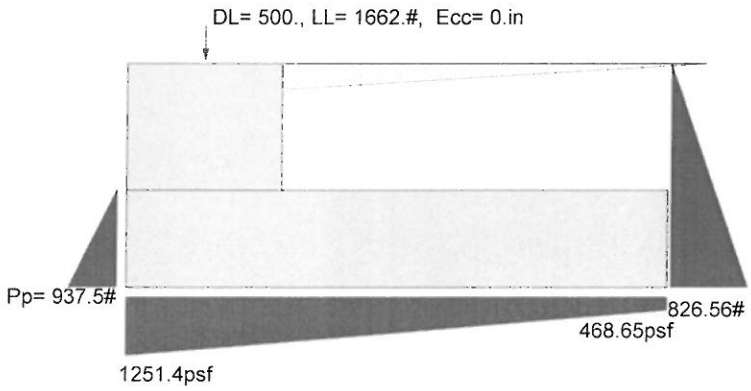
DL= 500., LL= 1662.#, Ecc= 0.in
Pp= 937.5#
826.56#
468.65psf
1251.4psf

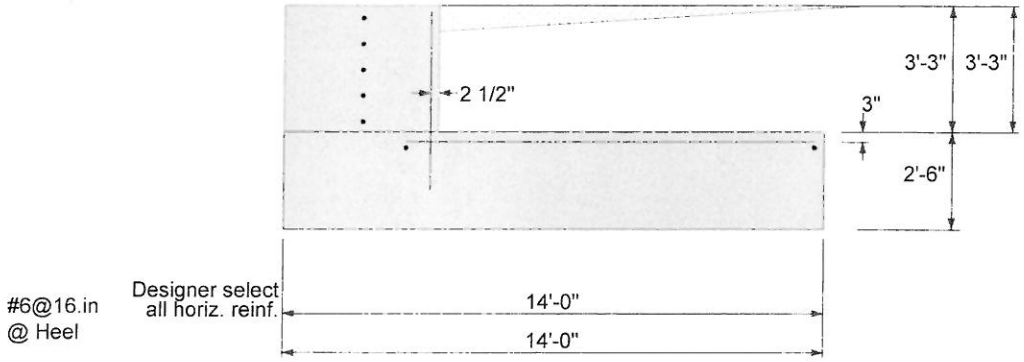
2 1/2"
3'-3"
3'-3"
3"
2'-6"
#6@16.in
@ Heel
Designer select
all horiz. reinf.
14'-0"
14'-0"

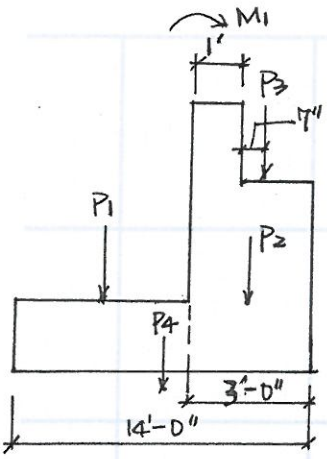

Since Enercalc doesn't accept the load eccentricity smaller than 0, the output soil bearing condition is not correct. The revised calcs are shown herein.

No.	Loading (#)	Distance (')	Moment (' - #)
P1	3250	-2	-6500
P2	1103	5.5	6067
P3	2162	4.58	9902
P4	5250	0	0
Total	11765		9469
			+ 15842 (M1)
			11053

$$\therefore \frac{P}{A} + \frac{M}{S} = \frac{11765}{14 \times 1} + \frac{11053}{\frac{1}{6} \times 1 \times 14^2}$$

$$= 1179 \text{ psf} < 1250 \text{ psf} \leftarrow \text{OK.}$$

Cantilevered Retaining Wall

File = R:\10VOB8~Y\VNZUG4~0.EC6
ENERCALC, INC. 1983-2015, Build:6.15.4.11, Ver:6.15.4.11

Lic. # : KW-06009801 Licensee : ENGLEKIRK

Description : Abutment and Footing Design-Lateral-Strength: 1.2D+0.5L+1.0W+1.6H

Calculations per ACI 318-11, ACI 530-11, IBC 2012, CBC 2013, ASCE 7-10

Criteria

Retained Height	=	3.25 ft
Wall height above soil	=	0.00 ft
Slope Behind Wall	=	0.00 : 1
Height of Soil over Toe	=	0.00 in
Water height over heel	=	0.0 ft

Vertical component of active
Lateral soil pressure options:
NOT USED for Soil Pressure.
NOT USED for Sliding Resistance.
NOT USED for Overturning Resistance.

Soil Data

Allow Soil Bearing	=	1,580.0 psf
Equivalent Fluid Pressure Method		
Heel Active Pressure	=	50.0 psf/ft
Toe Active Pressure	=	50.0 psf/ft
Passive Pressure	=	300.0 psf/ft
Soil Density, Heel	=	100.00 pcf
Soil Density, Toe	=	100.00 pcf
Friction Coeff btwn Ftg & Soil	=	0.350
Soil height to ignore for passive pressure	=	0.00 in

Surcharge Loads

Surcharge Over Heel	=	0.0 psf

NOT Used To Resist Sliding & Overturning

Surcharge Over Toe	=	0.0 psf

NOT Used for Sliding & Overturning

Lateral Load Applied to Stem

Lateral Load	=	0.0 plf
...Height to Top	=	2.25 ft
...Height to Bottom	=	2.00 ft
Wind on Exposed Stem	=	0.0 psf

Adjacent Footing Load

Adjacent Footing Load	=	0.0 lbs
Footing Width	=	0.00 ft
Eccentricity	=	0.00 in
Wall to Ftg CL Dist	=	0.00 ft
Footing Type		Line Load
Base Above/Below Soil at Back of Wall	=	0.0 ft
Poisson's Ratio	=	0.300

Axial Load Applied to Stem

Axial Dead Load	=	500.0 lbs
Axial Live Load	=	2,954.0 lbs
Axial Load Eccentricity	=	0.0 in

Design Summary

Wall Stability Ratios

Overturning	=	44.03	OK
Sliding	=	5.53	OK

Total Bearing Load	=	13,332	lbs
...resultant ecc.	=	17.32	in

Soil Pressure @ Toe	=	1,541	psf	OK
Soil Pressure @ Heel	=	363	psf	OK
Allowable	=	1,580	psf	

Soil Pressure Less Than Allowable

ACI Factored @ Toe	=	1,611	psf
ACI Factored @ Heel	=	379	psf

Footing Shear @ Toe	=	0.0	psi	OK
Footing Shear @ Heel	=	26.4	psi	OK
Allowable	=	82.2	psi	

Sliding Calcs (Vertical Component NOT Used)

Lateral Sliding Force	=	826.6	lbs
less 100% Passive Force	= -	937.5	lbs
less 100% Friction Force	= -	3,630.0	lbs
Added Force Req'd	=	0.0	lbs OK
....for 1.5 : 1 Stability	=	0.0	lbs OK

Load Factors

Dead Load	1.200
Live Load	0.500
Earth, H	1.600
Wind, W	1.000
Seismic, E	1.000

Stem Construction

Top Stem

		Stem OK
Design Height Above Ftg	ft =	0.00
Wall Material Above "Ht"	=	Concrete
Thickness	in =	48.00
Rebar Size	=	# 8
Rebar Spacing	in =	12.00
Rebar Placed at	=	Edge

Design Data

fb/FB + fa/Fa	=	0.003	← OK.
Total Force @ Section	lbs =	422.5	
Moment....Actual	ft-l =	457.7	
Moment.....Allowable	ft-l =	158,990.9	
Shear.....Actual	psi =	0.8	
Shear.....Allowable	psi =	82.2	
Wall Weight	psf =	424.0	
Rebar Depth 'd'	in =	45.50	
Lap splice if above	in =	42.94	
Lap splice if below	in =	15.34	
Hook embed into footing	in =	15.34	

Concrete Data

f'c	psi =	3,000.0
Fy	psi =	

Cantilevered Retaining Wall

File = R:\10VOB8~Y\VNZUG4~O.EC6
ENERCALC, INC. 1983-2015, Build:6.15.4.11, Ver:6.15.4.11

Lic. # : KW-06009801 Licensee : ENGLEKIRK

Description : Abutment and Footing Design-Lateral-Strength: 1.2D+0.5L+1.0W+1.6H

Footing Dimensions & Strengths

Toe Width	=	0.00 ft
Heel Width	=	14.00
Total Footing Width	=	14.00
Footing Thickness	=	30.00 in
Key Width	=	0.00 in
Key Depth	=	0.00 in
Key Distance from Toe	=	0.00 ft

f'c = 3,000 psi Fy = 60,000 psi
Footing Concrete Density = 150.00 pcf
Min. As % = 0.0018
Cover @ Top 3.00 @ Btm.= 3.00 in

Footing Design Results

		Toe	Heel	
Factored Pressure	=	1,611	379	psf
Mu' : Upward	=	0	0	ft-lb
Mu' : Downward	=	0	0	ft-lb
Mu: Design	=	0	458	ft-lb
Actual 1-Way Shear	=	0.00	26.42	psi
Allow 1-Way Shear	=	0.00	82.16	psi
Toe Reinforcing	=	# 6 @ 16.00 in		← ok.
Heel Reinforcing	=	# 6 @ 16.00 in		
Key Reinforcing	=	None Spec'd		

Other Acceptable Sizes & Spacings

Toe: Not req'd, Mu < S * Fr
Heel: Not req'd, Mu < S * Fr
Key: No key defined

Summary of Overturning & Resisting Forces & Moments

Item		.....OVERTURNING..... Force lbs	Distance ft	Moment ft-lb
Heel Active Pressure	=	826.6	1.92	1,584.2
Surcharge over Heel	=			
Toe Active Pressure	=			
Surcharge Over Toe	=			
Adjacent Footing Load	=			
Added Lateral Load	=			
Load @ Stem Above Soil	=			
Total	=	826.6	**O.T.M.** =	1,584.2

Resisting/Overturning Ratio = **44.03**
Vertical Loads used for Soil Pressure = 13,332.0 lbs

		.....RESISTING..... Force lbs	Distance ft	Moment ft-lb
Soil Over Heel	=	3,250.0	9.00	29,250.0
Sloped Soil Over Heel	=			
Surcharge Over Heel	=			
Adjacent Footing Load	=			
Axial Dead Load on Stem	=	500.0	2.00	1,000.0
* Axial Live Load on Stem	=	2,954.0	2.00	5,908.0
Soil Over Toe	=			
Surcharge Over Toe	=			
Stem Weight(s)	=	1,378.0	2.00	2,756.0
Earth @ Stem Transitions	=			
Footing Weight	=	5,250.0	7.00	36,750.0
Key Weight	=			
Vert. Component	=			
Total =		10,378.0 lbs	**R.M. =**	69,756.0

* Axial live load NOT included in total displayed, or used for overturning resistance, but is included for soil pressure calculation.

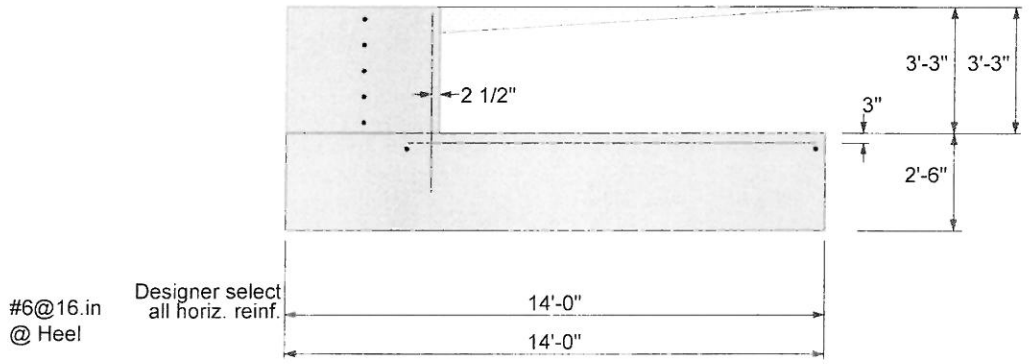
2 1/2"
3'-3"
3'-3"
3"
2'-6"
#6@16.in
@ Heel
Designer select
all horiz. reinf.
14'-0"
14'-0"

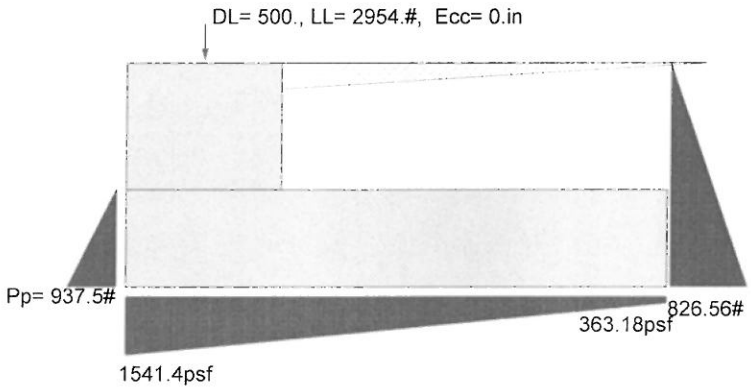
DL= 500., LL= 2954.#, Ecc= 0.in
Pp= 937.5#
826.56#
363.18psf
1541.4psf

Cantilevered Retaining Wall

File = R:\10\OB8~Y\VNZUG4~O.EC6
ENERCALC, INC. 1983-2015, Build:6.15.4.11, Ver:6.15.4.11

Lic. # : KW-06009801 Licensee : ENGLEKIRK

Description : Abutment and Footing Design-Lateral-Strength: (1.2D+0.2S_DS)+0.5L+1.0E+1.6H $S_{DS} = 0.9829$

Calculations per ACI 318-11, ACI 530-11, IBC 2012, CBC 2013, ASCE 7-10

Criteria

Retained Height	=	3.25 ft
Wall height above soil	=	0.00 ft
Slope Behind Wall	=	0.00 : 1
Height of Soil over Toe	=	0.00 in
Water height over heel	=	0.0 ft

Vertical component of active
Lateral soil pressure options:
NOT USED for Soil Pressure.
NOT USED for Sliding Resistance.
NOT USED for Overturning Resistance.

Soil Data

Allow Soil Bearing	=	1,580.0 psf
Equivalent Fluid Pressure Method		
Heel Active Pressure	=	50.0 psf/ft
Toe Active Pressure	=	50.0 psf/ft
Passive Pressure	=	300.0 psf/ft
Soil Density, Heel	=	100.00 pcf
Soil Density, Toe	=	100.00 pcf
Friction Coeff btwn Ftg & Soil	=	0.350
Soil height to ignore for passive pressure	=	0.00 in

Surcharge Loads

Surcharge Over Heel	=	0.0 psf

NOT Used To Resist Sliding & Overturning

Surcharge Over Toe	=	0.0 psf

NOT Used for Sliding & Overturning

Lateral Load Applied to Stem

Lateral Load	=	1,600.0 plf
...Height to Top	=	2.25 ft
...Height to Bottom	=	2.00 ft
Wind on Exposed Stem	=	0.0 psf

Adjacent Footing Load

Adjacent Footing Load	=	0.0 lbs
Footing Width	=	0.00 ft
Eccentricity	=	0.00 in
Wall to Ftg CL Dist	=	0.00 ft
Footing Type		Line Load
Base Above/Below Soil at Back of Wall	=	0.0 ft
Poisson's Ratio	=	0.300

Axial Load Applied to Stem

Axial Dead Load	=	500.0 lbs
Axial Live Load	=	1,662.0 lbs
Axial Load Eccentricity	=	0.0 in

Design Summary

Wall Stability Ratios

Overturning	=	20.31	OK
Sliding	=	3.73	OK
Total Bearing Load	=	12,040 lbs	
...resultant ecc.	=	14.59 in	
Soil Pressure @ Toe	=	1,308 psf	OK
Soil Pressure @ Heel	=	412 psf	OK
Allowable	=	1,580 psf	

Soil Pressure Less Than Allowable

ACI Factored @ Toe	=	1,669 psf	
ACI Factored @ Heel	=	526 psf	
Footing Shear @ Toe	=	0.0 psi	OK
Footing Shear @ Heel	=	30.8 psi	OK
Allowable	=	82.2 psi	

Sliding Calcs (Vertical Component NOT Used)

Lateral Sliding Force	=	1,226.6 lbs	
less 100% Passive Force	= -	937.5 lbs	
less 100% Friction Force	= -	3,630.0 lbs	
Added Force Req'd	=	0.0 lbs	OK
....for 1.5 : 1 Stability	=	0.0 lbs	OK

Load Factors

Dead Load	1.400
Live Load	0.500
Earth, H	1.600
Wind, W	1.000
Seismic, E	1.000

Stem Construction

Top Stem

		Stem OK
Design Height Above Ftg	ft =	0.00
Wall Material Above "Ht"	=	Concrete
Thickness	in =	48.00
Rebar Size	=	# 8
Rebar Spacing	in =	12.00
Rebar Placed at	=	Edge

Design Data

fb/FB + fa/Fa	=	0.008 ← OK.
Total Force @ Section	lbs =	822.5
Moment....Actual	ft-l =	1,307.7
Moment.....Allowable	ft-l =	158,990.9
Shear.....Actual	psi =	1.5
Shear.....Allowable	psi =	82.2
Wall Weight	psf =	424.0
Rebar Depth 'd'	in =	45.50
Lap splice if above	in =	42.94
Lap splice if below	in =	15.34
Hook embed into footing	in =	15.34

Concrete Data

f'c	psi =	3,000.0
Fy	psi =	

Cantilevered Retaining Wall

File = R:\10VOB8~Y\VNZUG4~O.EC6
ENERCALC, INC. 1983-2015, Build 6.15.4.11, Ver 6.15.4.11

Lic. # : KW-06009801 Licensee : ENGLEKIRK

Description : Abutment and Footing Design-Lateral-Strength: (1.2D+0.2S_DS)+0.5L+1.0E+1.6H

Footing Dimensions & Strengths

Toe Width	=	0.00 ft
Heel Width	=	14.00
Total Footing Width	=	14.00
Footing Thickness	=	30.00 in
Key Width	=	0.00 in
Key Depth	=	0.00 in
Key Distance from Toe	=	0.00 ft

f'c = 3,000 psi Fy = 60,000 psi
Footing Concrete Density = 150.00 pcf
Min. As % = 0.0018
Cover @ Top 3.00 @ Btm.= 3.00 in

Footing Design Results

		Toe	Heel	
Factored Pressure	=	1,669	526	psf
Mu' : Upward	=	0	0	ft-lb
Mu' : Downward	=	0	0	ft-lb
Mu: Design	=	0	1,308	ft-lb
Actual 1-Way Shear	=	0.00	30.82	psi
Allow 1-Way Shear	=	0.00	82.16	psi

Toe Reinforcing = #6 @ 16.00 in ← OK.
Heel Reinforcing = #6 @ 16.00 in
Key Reinforcing = None Spec'd

Other Acceptable Sizes & Spacings

Toe: Not req'd, Mu < S * Fr
Heel: Not req'd, Mu < S * Fr
Key: No key defined

Summary of Overturning & Resisting Forces & Moments

Item		.....OVERTURNING..... Force lbs	Distance ft	Moment ft-lb
Heel Active Pressure	=	826.6	1.92	1,584.2
Surcharge over Heel	=			
Toe Active Pressure	=			
Surcharge Over Toe	=			
Adjacent Footing Load	=			
Added Lateral Load	=	400.0	4.63	1,850.0
Load @ Stem Above Soil	=			
Total	=	1,226.6	**O.T.M.** =	3,434.2

Resisting/Overturning Ratio = **20.31**
Vertical Loads used for Soil Pressure = 12,040.0 lbs

		.....RESISTING..... Force lbs	Distance ft	Moment ft-lb
Soil Over Heel	=	3,250.0	9.00	29,250.0
Sloped Soil Over Heel	=			
Surcharge Over Heel	=			
Adjacent Footing Load	=			
Axial Dead Load on Stem	=	500.0	2.00	1,000.0
* Axial Live Load on Stem	=	1,662.0	2.00	3,324.0
Soil Over Toe	=			
Surcharge Over Toe	=			
Stem Weight(s)	=	1,378.0	2.00	2,756.0
Earth @ Stem Transitions	=			
Footing Weight	=	5,250.0	7.00	36,750.0
Key Weight	=			
Vert. Component	=			
Total =		10,378.0 lbs	**R.M. =**	69,756.0

* Axial live load NOT included in total displayed, or used for overturning resistance, but is included for soil pressure calculation.

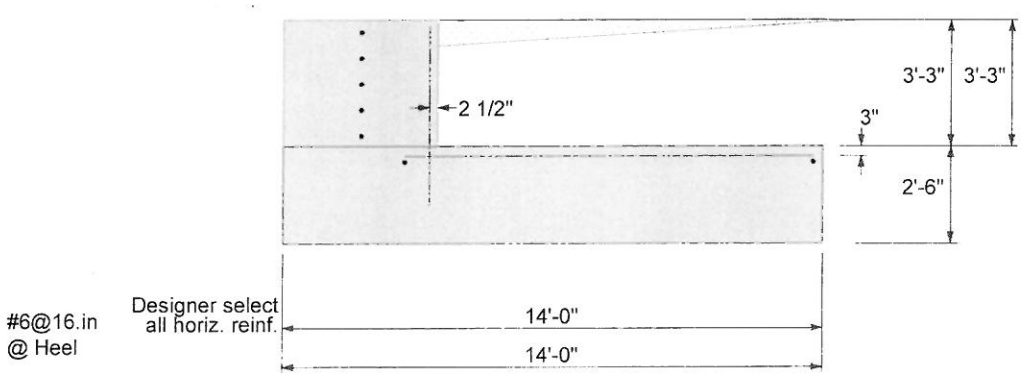
2 1/2"
3'-3"
3'-3"
3"
2'-6"
#6@16.in
@ Heel
Designer select
all horiz. reinf.
14'-0"
14'-0"

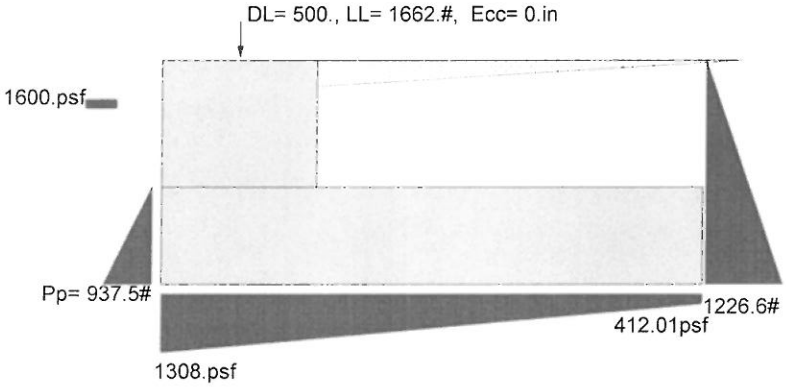
DL= 500., LL= 1662.#, Ecc= 0.in
1600.psf
Pp= 937.5#
1226.6#
412.01psf
1308.psf

Cantilevered Retaining Wall

File = R:\10VOB8~Y\VNZUG4~O.EC6
ENERCALC, INC. 1983-2015, Build 6.15.4.11, Ver.6.15.4.11

Lic. # : KW-06009801 Licensee : ENGLEKIRK

Description : Abutment and Footing Design-Lateral-Strength: 0.9D+1.0W+1.6H

Calculations per ACI 318-11, ACI 530-11, IBC 2012, CBC 2013, ASCE 7-10

Criteria

Retained Height	=	3.25 ft
Wall height above soil	=	0.00 ft
Slope Behind Wall	=	0.00 : 1
Height of Soil over Toe	=	0.00 in
Water height over heel	=	0.0 ft

Vertical component of active
Lateral soil pressure options:
NOT USED for Soil Pressure.
NOT USED for Sliding Resistance.
NOT USED for Overturning Resistance.

Soil Data

Allow Soil Bearing	=	1,580.0 psf
Equivalent Fluid Pressure Method		
Heel Active Pressure	=	50.0 psf/ft
Toe Active Pressure	=	50.0 psf/ft
Passive Pressure	=	300.0 psf/ft
Soil Density, Heel	=	100.00 pcf
Soil Density, Toe	=	100.00 pcf
Friction Coeff btwn Ftg & Soil	=	0.350
Soil height to ignore for passive pressure	=	0.00 in

Surcharge Loads

Surcharge Over Heel	=	0.0 psf

NOT Used To Resist Sliding & Overturning

Surcharge Over Toe	=	0.0 psf

NOT Used for Sliding & Overturning

Lateral Load Applied to Stem

Lateral Load	=	0.0 plf
...Height to Top	=	2.25 ft
...Height to Bottom	=	2.00 ft
Wind on Exposed Stem	=	0.0 psf

Adjacent Footing Load

Adjacent Footing Load	=	0.0 lbs
Footing Width	=	0.00 ft
Eccentricity	=	0.00 in
Wall to Ftg CL Dist	=	0.00 ft
Footing Type		Line Load
Base Above/Below Soil at Back of Wall	=	0.0 ft
Poisson's Ratio	=	0.300

Axial Load Applied to Stem

Axial Dead Load	=	500.0 lbs
Axial Live Load	=	646.0 lbs
Axial Load Eccentricity	=	0.0 in

Design Summary

Wall Stability Ratios

Overturning	=	44.03	OK
Sliding	=	5.53	OK
Total Bearing Load	=	11,024 lbs	
...resultant ecc.	=	8.39 in	
Soil Pressure @ Toe	=	1,023 psf	OK
Soil Pressure @ Heel	=	552 psf	OK
Allowable	=	1,580 psf	

Soil Pressure Less Than Allowable

ACI Factored @ Toe	=	927 psf	
ACI Factored @ Heel	=	500 psf	
Footing Shear @ Toe	=	0.0 psi	OK
Footing Shear @ Heel	=	19.8 psi	OK
Allowable	=	82.2 psi	

Sliding Calcs (Vertical Component NOT Used)

Lateral Sliding Force	=	826.6 lbs	
less 100% Passive Force	= -	937.5 lbs	
less 100% Friction Force	= -	3,630.0 lbs	
Added Force Req'd	=	0.0 lbs	OK
....for 1.5 : 1 Stability	=	0.0 lbs	OK

Load Factors

Dead Load	0.900
Live Load	1.000
Earth, H	1.600
Wind, W	1.000
Seismic, E	1.000

Stem Construction

Top Stem

		Stem OK
Design Height Above Ftg	ft =	0.00
Wall Material Above "Ht"	=	Concrete
Thickness	in =	48.00
Rebar Size	=	# 8
Rebar Spacing	in =	12.00
Rebar Placed at	=	Edge

Design Data

fb/FB + fa/Fa	=	0.003	← OK.
Total Force @ Section	lbs =	422.5	
Moment....Actual	ft-l =	457.7	
Moment.....Allowable	ft-l =	158,990.9	
Shear.....Actual	psi =	0.8	
Shear.....Allowable	psi =	82.2	
Wall Weight	psf =	424.0	
Rebar Depth 'd'	in =	45.50	
Lap splice if above	in =	42.94	
Lap splice if below	in =	15.34	
Hook embed into footing	in =	15.34	

Concrete Data

f'c	psi =	3,000.0
Fy	psi =	

Cantilevered Retaining Wall

File = R:\10VOB8~YWNZUG4~0.EC6
ENERCALC, INC. 1983-2015, Build:6.15.4.11, Ver:6.15.4.11

Lic. # : KW-06009801 Licensee : ENGLEKIRK

Description : Abutment and Footing Design-Lateral-Strength: 0.9D+1.0W+1.6H

Footing Dimensions & Strengths

Toe Width	=	0.00 ft
Heel Width	=	14.00
Total Footing Width	=	14.00
Footing Thickness	=	30.00 in
Key Width	=	0.00 in
Key Depth	=	0.00 in
Key Distance from Toe	=	0.00 ft

f'c = 3,000 psi Fy = 60,000 psi
Footing Concrete Density = 150.00 pcf
Min. As % = 0.0018
Cover @ Top 3.00 @ Btm.= 3.00 in

Footing Design Results

		Toe	Heel
Factored Pressure	=	927	500 psf
Mu' : Upward	=	0	0 ft-lb
Mu' : Downward	=	0	0 ft-lb
Mu: Design	=	0	458 ft-lb
Actual 1-Way Shear	=	0.00	19.81 psi
Allow 1-Way Shear	=	0.00	82.16 psi
Toe Reinforcing	=	# 6 @ 16.00 in	← ok.
Heel Reinforcing	=	# 6 @ 16.00 in	
Key Reinforcing	=	None Spec'd	

Other Acceptable Sizes & Spacings

Toe: Not req'd, Mu < S * Fr
Heel: Not req'd, Mu < S * Fr
Key: No key defined

Summary of Overturning & Resisting Forces & Moments

Item		.....OVERTURNING..... Force lbs	Distance ft	Moment ft-lb
Heel Active Pressure	=	826.6	1.92	1,584.2
Surcharge over Heel	=			
Toe Active Pressure	=			
Surcharge Over Toe	=			
Adjacent Footing Load	=			
Added Lateral Load	=			
Load @ Stem Above Soil	=			
Total	=	826.6	**O.T.M.** =	1,584.2

Resisting/Overturning Ratio = **44.03**
Vertical Loads used for Soil Pressure = 11,024.0 lbs

		.....RESISTING..... Force lbs	Distance ft	Moment ft-lb
Soil Over Heel	=	3,250.0	9.00	29,250.0
Sloped Soil Over Heel	=			
Surcharge Over Heel	=			
Adjacent Footing Load	=			
Axial Dead Load on Stem	=	500.0	2.00	1,000.0
* Axial Live Load on Stem	=	646.0	2.00	1,292.0
Soil Over Toe	=			
Surcharge Over Toe	=			
Stem Weight(s)	=	1,378.0	2.00	2,756.0
Earth @ Stem Transitions	=			
Footing Weight	=	5,250.0	7.00	36,750.0
Key Weight	=			
Vert. Component	=			
Total =		10,378.0 lbs	**R.M. =**	69,756.0

* Axial live load NOT included in total displayed, or used for overturning resistance, but is included for soil pressure calculation.

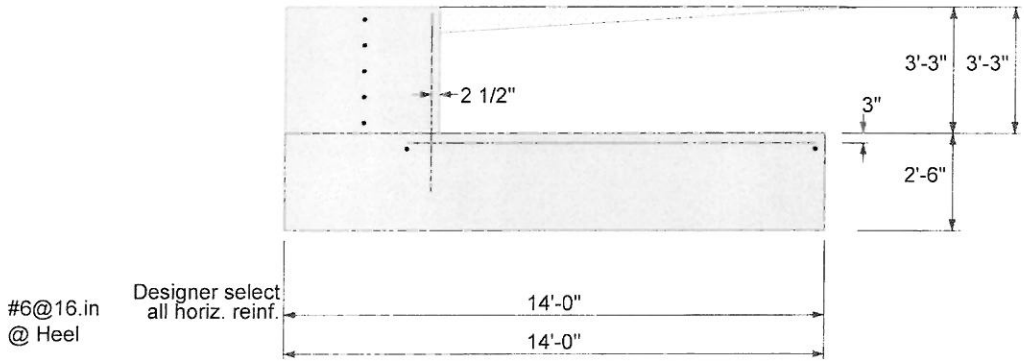
2 1/2"
3'-3"
3'-3"
3"
2'-6"
#6@16.in
@ Heel
Designer select
all horiz. reinf.
14'-0"
14'-0"

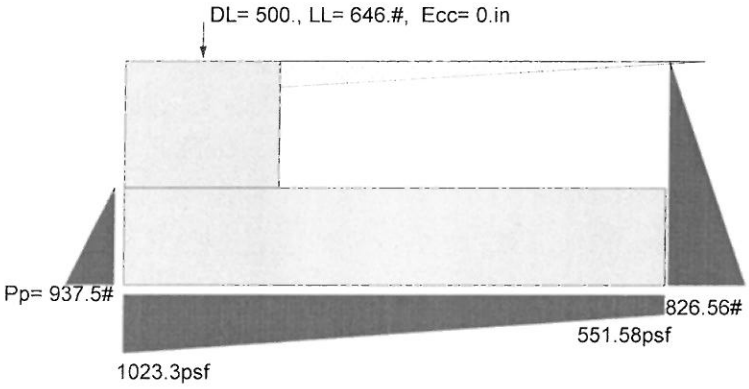
DL= 500., LL= 646.#, Ecc= 0.in
Pp= 937.5#
826.56#
551.58psf
1023.3psf

Cantilevered Retaining Wall

File = R:\10VOB8~Y\VNZUG4~O.EC6
ENERCALC, INC. 1983-2015, Build 6.15.4.11, Ver 6.15.4.11

Lic. # : KW-06009801 Licensee : ENGLEKIRK

Description : Abutment and Footing Design-Lateral-Strength: (0.9-0.2S_DS)D+1.0E+1.6H $S_{DS} = 0.989$

Calculations per ACI 318-11, ACI 530-11, IBC 2012, CBC 2013, ASCE 7-10

Criteria

Retained Height	=	3.25 ft
Wall height above soil	=	0.00 ft
Slope Behind Wall	=	0.00 : 1
Height of Soil over Toe	=	0.00 in
Water height over heel	=	0.0 ft

Vertical component of active
Lateral soil pressure options:
NOT USED for Soil Pressure.
NOT USED for Sliding Resistance.
NOT USED for Overturning Resistance.

Soil Data

Allow Soil Bearing	=	1,580.0 psf
Equivalent Fluid Pressure Method		
Heel Active Pressure	=	50.0 psf/ft
Toe Active Pressure	=	50.0 psf/ft
Passive Pressure	=	300.0 psf/ft
Soil Density, Heel	=	100.00 pcf
Soil Density, Toe	=	100.00 pcf
Friction Coeff btwn Ftg & Soil	=	0.350
Soil height to ignore for passive pressure	=	0.00 in

Surcharge Loads

Surcharge Over Heel	=	0.0 psf

NOT Used To Resist Sliding & Overturning

Surcharge Over Toe	=	0.0 psf

NOT Used for Sliding & Overturning

Lateral Load Applied to Stem

Lateral Load	=	1,600.0 plf
...Height to Top	=	2.25 ft
...Height to Bottom	=	2.00 ft
Wind on Exposed Stem	=	0.0 psf

Adjacent Footing Load

Adjacent Footing Load	=	0.0 lbs
Footing Width	=	0.00 ft
Eccentricity	=	0.00 in
Wall to Ftg CL Dist	=	0.00 ft
Footing Type		Line Load
Base Above/Below Soil at Back of Wall	=	0.0 ft
Poisson's Ratio	=	0.300

Axial Load Applied to Stem

Axial Dead Load	=	500.0 lbs
Axial Live Load	=	0.0 lbs
Axial Load Eccentricity	=	0.0 in

Design Summary

Wall Stability Ratios

Overturning	=	20.31	OK
Sliding	=	3.73	OK
Total Bearing Load	=	10,378 lbs	
...resultant ecc.	=	7.31 in	
Soil Pressure @ Toe	=	935 psf	OK
Soil Pressure @ Heel	=	548 psf	OK
Allowable	=	1,580 psf	

Soil Pressure Less Than Allowable

ACI Factored @ Toe	=	654 psf	
ACI Factored @ Heel	=	383 psf	
Footing Shear @ Toe	=	0.0 psi	OK
Footing Shear @ Heel	=	15.4 psi	OK
Allowable	=	82.2 psi	

Sliding Calcs (Vertical Component NOT Used)

Lateral Sliding Force	=	1,226.6 lbs	
less 100% Passive Force	= -	937.5 lbs	
less 100% Friction Force	= -	3,630.0 lbs	
Added Force Req'd	=	0.0 lbs	OK
....for 1.5 : 1 Stability	=	0.0 lbs	OK

Load Factors

Dead Load	0.700
Live Load	1.000
Earth, H	1.600
Wind, W	1.000
Seismic, E	1.000

Stem Construction

Top Stem

		Stem OK
Design Height Above Ftg	ft =	0.00
Wall Material Above "Ht"	=	Concrete
Thickness	in =	48.00
Rebar Size	=	# 8
Rebar Spacing	in =	12.00
Rebar Placed at	=	Edge
Design Data		
fb/FB + fa/Fa	=	0.008 ← OK.
Total Force @ Section	lbs =	822.5
Moment....Actual	ft-l =	1,307.7
Moment.....Allowable	ft-l =	158,990.9
Shear.....Actual	psi =	1.5
Shear.....Allowable	psi =	82.2
Wall Weight	psf =	424.0
Rebar Depth 'd'	in =	45.50
Lap splice if above	in =	42.94
Lap splice if below	in =	15.34
Hook embed into footing	in =	15.34
Concrete Data		
f'c	psi =	3,000.0
Fy	psi =	

Cantilevered Retaining Wall

File = R:\10VOB8~Y\VNZUG4~O.EC6
ENERCALC, INC. 1983-2015, Build:6.15.4.11, Ver:6.15.4.11

Lic. # : KW-06009801 Licensee : ENGLEKIRK

Description : Abutment and Footing Design-Lateral-Strength: (0.9-0.2S_DS)D+1.0E+1.6H

Footing Dimensions & Strengths

Toe Width	=	0.00 ft
Heel Width	=	14.00
Total Footing Width	=	14.00
Footing Thickness	=	30.00 in
Key Width	=	0.00 in
Key Depth	=	0.00 in
Key Distance from Toe	=	0.00 ft

f'c = 3,000 psi Fy = 60,000 psi
Footing Concrete Density = 150.00 pcf
Min. As % = 0.0018
Cover @ Top 3.00 @ Btm.= 3.00 in

Footing Design Results

		Toe	Heel	
Factored Pressure	=	654	383	psf
Mu' : Upward	=	0	0	ft-lb
Mu' : Downward	=	0	0	ft-lb
Mu: Design	=	0	1,308	ft-lb
Actual 1-Way Shear	=	0.00	15.41	psi
Allow 1-Way Shear	=	0.00	82.16	psi
Toe Reinforcing	=	# 6 @ 16.00 in		
Heel Reinforcing	=	# 6 @ 16.00 in		
Key Reinforcing	=	None Spec'd		

← OK.

Other Acceptable Sizes & Spacings

Toe: Not req'd, Mu < S * Fr
Heel: Not req'd, Mu < S * Fr
Key: No key defined

Summary of Overturning & Resisting Forces & Moments

Item		.....OVERTURNING..... Force lbs	Distance ft	Moment ft-lb
Heel Active Pressure	=	826.6	1.92	1,584.2
Surcharge over Heel	=			
Toe Active Pressure	=			
Surcharge Over Toe	=			
Adjacent Footing Load	=			
Added Lateral Load	=	400.0	4.63	1,850.0
Load @ Stem Above Soil	=			
Total	=	1,226.6	**O.T.M.** =	3,434.2

Resisting/Overturning Ratio = **20.31**
Vertical Loads used for Soil Pressure = 10,378.0 lbs

		.....RESISTING..... Force lbs	Distance ft	Moment ft-lb
Soil Over Heel	=	3,250.0	9.00	29,250.0
Sloped Soil Over Heel	=			
Surcharge Over Heel	=			
Adjacent Footing Load	=			
Axial Dead Load on Stem	=	500.0	2.00	1,000.0
* Axial Live Load on Stem	=			
Soil Over Toe	=			
Surcharge Over Toe	=			
Stem Weight(s)	=	1,378.0	2.00	2,756.0
Earth @ Stem Transitions	=			
Footing Weight	=	5,250.0	7.00	36,750.0
Key Weight	=			
Vert. Component	=			
Total =		10,378.0 lbs	**R.M. =**	69,756.0

* Axial live load NOT included in total displayed, or used for overturning resistance, but is included for soil pressure calculation.

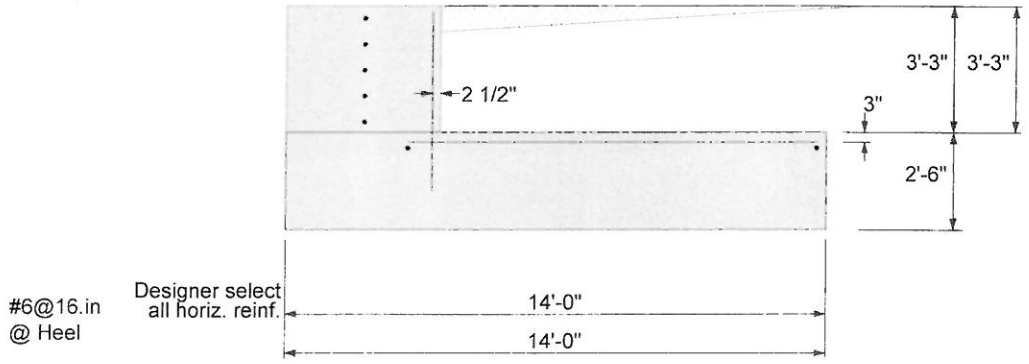
2 1/2"
3'-3"
3'-3"
3"
2'-6"
#6@16.in
@ Heel
Designer select
all horiz. reinf.
14'-0"
14'-0"

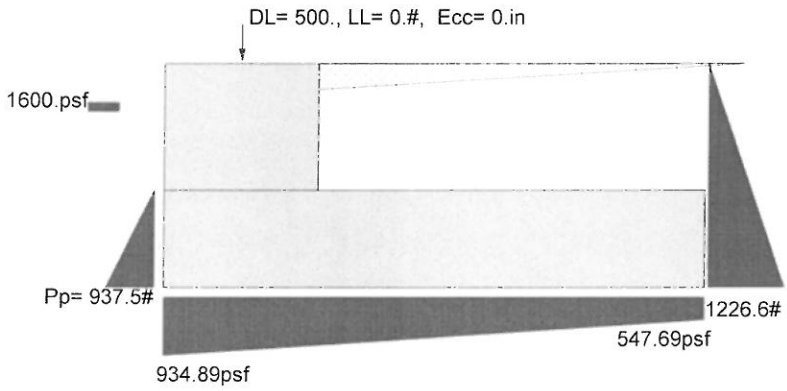
DL= 500., LL= 0.#, Ecc= 0.in
1600.psf
Pp= 937.5#
1226.6#
547.69psf
934.89psf

Soil Bearing under lateral loading:

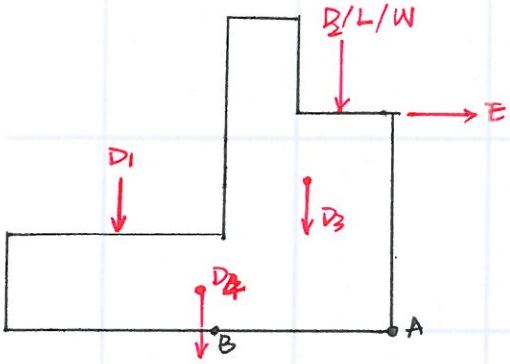

NO.	Loading (#)	Distance to A	M_A	Distance to B
D1	3250	9	29250	-2
D2	500	2.42	1210	4.58
D3	1103	1.5	1655	5.5
D4	5250	7	36750	0
L	1662	2.42	4022	4.58
W	646	2.42	1564	4.58
E	400	4.63	1850	4.63
H	826.6	1.92	1584.2	1584.2

LOAD COMBINATIONS	BSM/OTM	Sliding	Max Bearing Pressure.
D + 0.6W + H	44:1	5.529:1	965.4
(1+0.14 S_{DS}) D + 0.7E + H	27.62:1	4.59:1	1034.5
D + 0.75L + 0.75(0.6W) + H	44:1	5.53:1	1223.5
(1+0.15 S_{DS}) D + 0.75L + 0.525E + H	30:1	4.76:1	1272.1
0.6D + 0.6W + H	26.4:1	3.77:1	633.5
(0.6 - 0.14 S_{DS}) D + 0.7E + H	11.15:1	2.36:1	469.8

< 1000 x 1.33 + 100 x 2.5 = 1580 psf.
OK.

Cantilevered Retaining Wall

File = R:\10VOB8~Y\VNZUG4~O.EC6
ENERCALC, INC. 1983-2015, Build 6.15.4.11, Ver 6.15.4.11

Lic. # : KW-06009801 Licensee : ENGLEKIRK

Description : Abutment and Footing Design-Lateral-Service: D+0.6W+H

Calculations per ACI 318-11, ACI 530-11, IBC 2012, CBC 2013, ASCE 7-10

Criteria

Retained Height	=	3.25 ft
Wall height above soil	=	0.00 ft
Slope Behind Wall	=	0.00 : 1
Height of Soil over Toe	=	0.00 in
Water height over heel	=	0.0 ft

Vertical component of active
Lateral soil pressure options:
NOT USED for Soil Pressure.
NOT USED for Sliding Resistance.
NOT USED for Overturning Resistance.

Soil Data

Allow Soil Bearing	=	1,580.0 psf
Equivalent Fluid Pressure Method		
Heel Active Pressure	=	50.0 psf/ft
Toe Active Pressure	=	50.0 psf/ft
Passive Pressure	=	300.0 psf/ft
Soil Density, Heel	=	100.00 pcf
Soil Density, Toe	=	100.00 pcf
Friction Coeff btwn Ftg & Soil	=	0.350
Soil height to ignore for passive pressure	=	0.00 in

Surcharge Loads

Surcharge Over Heel	=	0.0 psf

NOT Used To Resist Sliding & Overturning

Surcharge Over Toe	=	0.0 psf

NOT Used for Sliding & Overturning

Lateral Load Applied to Stem

Lateral Load	=	0.0 plf
...Height to Top	=	2.25 ft
...Height to Bottom	=	2.00 ft
Wind on Exposed Stem	=	0.0 psf

Adjacent Footing Load

Adjacent Footing Load	=	0.0 lbs
Footing Width	=	0.00 ft
Eccentricity	=	0.00 in
Wall to Ftg CL Dist	=	0.00 ft
Footing Type		Line Load
Base Above/Below Soil at Back of Wall	=	0.0 ft
Poisson's Ratio	=	0.300

Axial Load Applied to Stem

Axial Dead Load	=	500.0 lbs
Axial Live Load	=	388.0 lbs
Axial Load Eccentricity	=	0.0 in

Design Summary

Wall Stability Ratios

Overturning	=	44.03	OK
Sliding	=	5.53	OK
Total Bearing Load	=	10,766 lbs	
...resultant ecc.	=	7.15 in	
Soil Pressure @ Toe	=	965 psf	OK
Soil Pressure @ Heel	=	573 psf	OK
Allowable	=	1,580 psf	

Soil Pressure Less Than Allowable

ACI Factored @ Toe	=	965 psf	
ACI Factored @ Heel	=	573 psf	
Footing Shear @ Toe	=	0.0 psi	OK
Footing Shear @ Heel	=	22.0 psi	OK
Allowable	=	82.2 psi	

Sliding Calcs (Vertical Component NOT Used)

Lateral Sliding Force	=	826.6 lbs	
less 100% Passive Force	= -	937.5 lbs	
less 100% Friction Force	= -	3,630.0 lbs	
Added Force Req'd	=	0.0 lbs	OK
....for 1.5 : 1 Stability	=	0.0 lbs	OK

Load Factors

Dead Load	1.000
Live Load	1.000
Earth, H	1.000
Wind, W	1.000
Seismic, E	1.000

Stem Construction

Top Stem

		Stem OK
Design Height Above Ftg	ft =	0.00
Wall Material Above "Ht"	=	Concrete
Thickness	in =	48.00
Rebar Size	=	# 8
Rebar Spacing	in =	12.00
Rebar Placed at	=	Edge

Design Data

fb/FB + fa/Fa	=	0.002
Total Force @ Section	lbs =	264.1
Moment....Actual	ft-l =	286.1
Moment.....Allowable	ft-l =	158,990.9
Shear.....Actual	psi =	0.5
Shear.....Allowable	psi =	82.2
Wall Weight	psf =	424.0
Rebar Depth 'd'	in =	45.50
Lap splice if above	in =	42.94
Lap splice if below	in =	15.34
Hook embed into footing	in =	15.34

Concrete Data

f'c	psi =	3,000.0
Fy	psi =	

Cantilevered Retaining Wall

File = R:\10VOB8~YWNZUG4~O.EC6
ENERCALC, INC. 1983-2015, Build:6.15.4.11, Ver:6.15.4.11

Lic. # : KW-06009801 — Licensee : ENGLEKIRK

Description : Abutment and Footing Design-Lateral-Service: D+0.6W+H

Footing Dimensions & Strengths

Toe Width	=	0.00 ft
Heel Width	=	14.00
Total Footing Width	=	14.00
Footing Thickness	=	30.00 in
Key Width	=	0.00 in
Key Depth	=	0.00 in
Key Distance from Toe	=	0.00 ft

f'c = 3,000 psi Fy = 60,000 psi
Footing Concrete Density = 150.00 pcf
Min. As % = 0.0018
Cover @ Top 3.00 @ Btm.= 3.00 in

Footing Design Results

		Toe	Heel	
Factored Pressure	=	965	573	psf
Mu' : Upward	=	0	0	ft-lb
Mu' : Downward	=	0	0	ft-lb
Mu: Design	=	0	286	ft-lb
Actual 1-Way Shear	=	0.00	22.01	psi
Allow 1-Way Shear	=	0.00	82.16	psi

Toe Reinforcing = # 6 @ 16.00 in
Heel Reinforcing = # 6 @ 16.00 in
Key Reinforcing = None Spec'd

Other Acceptable Sizes & Spacings

Toe: Not req'd, Mu < S * Fr
Heel: Not req'd, Mu < S * Fr
Key: No key defined

Summary of Overturning & Resisting Forces & Moments

Item		.....OVERTURNING..... Force lbs	Distance ft	Moment ft-lb
Heel Active Pressure	=	826.6	1.92	1,584.2
Surcharge over Heel	=			
Toe Active Pressure	=			
Surcharge Over Toe	=			
Adjacent Footing Load	=			
Added Lateral Load	=			
Load @ Stem Above Soil	=			
Total	=	826.6	**O.T.M.** =	1,584.2

Resisting/Overturning Ratio = **44.03**
Vertical Loads used for Soil Pressure = 10,766.0 lbs

		.....RESISTING..... Force lbs	Distance ft	Moment ft-lb
Soil Over Heel	=	3,250.0	9.00	29,250.0
Sloped Soil Over Heel	=			
Surcharge Over Heel	=			
Adjacent Footing Load	=			
Axial Dead Load on Stem	=	500.0	2.00	1,000.0
* Axial Live Load on Stem	=	388.0	2.00	776.0
Soil Over Toe	=			
Surcharge Over Toe	=			
Stem Weight(s)	=	1,378.0	2.00	2,756.0
Earth @ Stem Transitions	=			
Footing Weight	=	5,250.0	7.00	36,750.0
Key Weight	=			
Vert. Component	=			
Total =		10,378.0 lbs	**R.M. =**	69,756.0

* Axial live load NOT included in total displayed, or used for overturning resistance, but is included for soil pressure calculation.

Cantilevered Retaining Wall

File = R:\10VOB8~YWNZUG4~O.EC6
ENERCALC, INC. 1983-2015, Build:6.15.4.11, Ver:6.15.4.11

Lic. # : KW-06009801 Licensee : ENGLEKIRK

Description : Abutment and Footing Design-Lateral-Service: (1+0.14S_DS)D+0.7E+H

Calculations per ACI 318-11, ACI 530-11, IBC 2012, CBC 2013, ASCE 7-10

Criteria

Retained Height	=	3.25 ft
Wall height above soil	=	0.00 ft
Slope Behind Wall	=	0.00 : 1
Height of Soil over Toe	=	0.00 in
Water height over heel	=	0.0 ft

Vertical component of active
Lateral soil pressure options:
NOT USED for Soil Pressure.
NOT USED for Sliding Resistance.
NOT USED for Overturning Resistance.

Soil Data

Allow Soil Bearing	=	1,580.0 psf
Equivalent Fluid Pressure Method		
Heel Active Pressure	=	50.0 psf/ft
Toe Active Pressure	=	50.0 psf/ft
Passive Pressure	=	300.0 psf/ft
Soil Density, Heel	=	114.00 pcf
Soil Density, Toe	=	114.00 pcf
Friction Coeff btwn Ftg & Soil	=	0.350
Soil height to ignore for passive pressure	=	0.00 in

Surcharge Loads

Surcharge Over Heel = 0.0 psf
NOT Used To Resist Sliding & Overturning
Surcharge Over Toe = 0.0 psf
NOT Used for Sliding & Overturning

Lateral Load Applied to Stem

Lateral Load	=	1,120.0 plf
...Height to Top	=	2.25 ft
...Height to Bottom	=	2.00 ft
Wind on Exposed Stem	=	0.0 psf

Adjacent Footing Load

Adjacent Footing Load	=	0.0 lbs
Footing Width	=	0.00 ft
Eccentricity	=	0.00 in
Wall to Ftg CL Dist	=	0.00 ft
Footing Type		Line Load
Base Above/Below Soil at Back of Wall	=	0.0 ft
Poisson's Ratio	=	0.300

Axial Load Applied to Stem

Axial Dead Load	=	570.0 lbs
Axial Live Load	=	0.0 lbs
Axial Load Eccentricity	=	0.0 in

Design Summary

Wall Stability Ratios

Overturning	=	27.62	OK
Sliding	=	4.59	OK
Total Bearing Load	=	11,833 lbs	
...resultant ecc.	=	6.27 in	
Soil Pressure @ Toe	=	1,035 psf	OK
Soil Pressure @ Heel	=	656 psf	OK
Allowable	=	1,580 psf	
Soil Pressure Less Than Allowable			
ACI Factored @ Toe	=	1,035 psf	
ACI Factored @ Heel	=	656 psf	
Footing Shear @ Toe	=	0.0 psi	OK
Footing Shear @ Heel	=	25.1 psi	OK
Allowable	=	82.2 psi	

Sliding Calcs (Vertical Component NOT Used)

Lateral Sliding Force	=	1,106.6 lbs	
less 100% Passive Force	= -	937.5 lbs	
less 100% Friction Force	= -	4,140.6 lbs	
Added Force Req'd	=	0.0 lbs	OK
....for 1.5 : 1 Stability	=	0.0 lbs	OK

Load Factors

Dead Load	1.000
Live Load	1.000
Earth, H	1.000
Wind, W	1.000
Seismic, E	1.000

Stem Construction

Top Stem

		Stem OK
Design Height Above Ftg	ft =	0.00
Wall Material Above "Ht"	=	Concrete
Thickness	in =	48.00
Rebar Size	=	# 8
Rebar Spacing	in =	12.00
Rebar Placed at	=	Edge
Design Data		
fb/FB + fa/Fa	=	0.006
Total Force @ Section	lbs =	544.1
Moment....Actual	ft-l =	881.1
Moment.....Allowable	ft-l =	158,990.9
Shear.....Actual	psi =	1.0
Shear.....Allowable	psi =	82.2
Wall Weight	psf =	484.0
Rebar Depth 'd'	in =	45.50
Lap splice if above	in =	42.94
Lap splice if below	in =	15.34
Hook embed into footing	in =	15.34
Concrete Data		
f'c	psi =	3,000.0
Fy	psi =	

Cantilevered Retaining Wall

File = R:\10VOB8~Y\VNZUG4~O.EC6
ENERCALC, INC. 1983-2015, Build:6.15.4.11, Ver:6.15.4.11

Lic. # : KW-06009801 Licensee : ENGLEKIRK

Description : Abutment and Footing Design-Lateral-Service: (1+0.14S_DS)D+0.7E+H

Footing Dimensions & Strengths

Toe Width	=	0.00 ft
Heel Width	=	14.00
Total Footing Width	=	14.00
Footing Thickness	=	30.00 in
Key Width	=	0.00 in
Key Depth	=	0.00 in
Key Distance from Toe	=	0.00 ft

f'c = 3,000 psi Fy = 60,000 psi
Footing Concrete Density = 171.00 pcf
Min. As % = 0.0018
Cover @ Top 3.00 @ Btm.= 3.00 in

Footing Design Results

		Toe	Heel	
Factored Pressure	=	1,035	656	psf
Mu' : Upward	=	0	0	ft-lb
Mu' : Downward	=	0	0	ft-lb
Mu: Design	=	0	881	ft-lb
Actual 1-Way Shear	=	0.00	25.09	psi
Allow 1-Way Shear	=	0.00	82.16	psi

Toe Reinforcing = # 6 @ 16.00 in
Heel Reinforcing = # 6 @ 16.00 in
Key Reinforcing = None Spec'd

Other Acceptable Sizes & Spacings

Toe: Not req'd, Mu < S * Fr
Heel: Not req'd, Mu < S * Fr
Key: No key defined

Summary of Overturning & Resisting Forces & Moments

Item		.....OVERTURNING..... Force lbs	Distance ft	Moment ft-lb
Heel Active Pressure	=	826.6	1.92	1,584.2
Surcharge over Heel	=			
Toe Active Pressure	=			
Surcharge Over Toe	=			
Adjacent Footing Load	=			
Added Lateral Load	=	280.0	4.63	1,295.0
Load @ Stem Above Soil	=			
Total	=	1,106.6	**O.T.M.** =	2,879.2

Resisting/Overturning Ratio = **27.62**
Vertical Loads used for Soil Pressure = 11,833.0 lbs

		.....RESISTING..... Force lbs	Distance ft	Moment ft-lb
Soil Over Heel	=	3,705.0	9.00	33,345.0
Sloped Soil Over Heel	=			
Surcharge Over Heel	=			
Adjacent Footing Load	=			
Axial Dead Load on Stem	=	570.0	2.00	1,140.0
* Axial Live Load on Stem	=			
Soil Over Toe	=			
Surcharge Over Toe	=			
Stem Weight(s)	=	1,573.0	2.00	3,146.0
Earth @ Stem Transitions	=			
Footing Weight	=	5,985.0	7.00	41,895.0
Key Weight	=			
Vert. Component	=			
Total =		11,833.0 lbs	**R.M. =**	79,526.0

* Axial live load NOT included in total displayed, or used for overturning resistance, but is included for soil pressure calculation.

Cantilevered Retaining Wall

File = R:\10VOB8~Y\VNZUG4~O.EC6
ENERCALC, INC. 1983-2015, Build 6.15.4.11, Ver 6.15.4.11

Lic. # : KW-06009801 Licensee : ENGLEKIRK

Description : Abutment and Footing Design-Lateral-Service: D+0.75L+0.75(0.6W)+H

Calculations per ACI 318-11, ACI 530-11, IBC 2012, CBC 2013, ASCE 7-10

Criteria

Retained Height	=	3.25 ft
Wall height above soil	=	0.00 ft
Slope Behind Wall	=	0.00 : 1
Height of Soil over Toe	=	0.00 in
Water height over heel	=	0.0 ft

Vertical component of active
Lateral soil pressure options:
NOT USED for Soil Pressure.
NOT USED for Sliding Resistance.
NOT USED for Overturning Resistance.

Soil Data

Allow Soil Bearing	=	1,580.0 psf
Equivalent Fluid Pressure Method		
Heel Active Pressure	=	50.0 psf/ft
Toe Active Pressure	=	50.0 psf/ft
Passive Pressure	=	300.0 psf/ft
Soil Density, Heel	=	100.00 pcf
Soil Density, Toe	=	100.00 pcf
Friction Coeff btwn Ftg & Soil	=	0.350
Soil height to ignore for passive pressure	=	0.00 in

Surcharge Loads

Surcharge Over Heel	=	0.0 psf

NOT Used To Resist Sliding & Overturning

Surcharge Over Toe	=	0.0 psf

NOT Used for Sliding & Overturning

Lateral Load Applied to Stem

Lateral Load	=	0.0 plf
...Height to Top	=	2.25 ft
...Height to Bottom	=	2.00 ft
Wind on Exposed Stem	=	0.0 psf

Adjacent Footing Load

Adjacent Footing Load	=	0.0 lbs
Footing Width	=	0.00 ft
Eccentricity	=	0.00 in
Wall to Ftg CL Dist	=	0.00 ft
Footing Type		Line Load
Base Above/Below Soil at Back of Wall	=	0.0 ft
Poisson's Ratio	=	0.300

Axial Load Applied to Stem

Axial Dead Load	=	500.0 lbs
Axial Live Load	=	1,537.0 lbs
Axial Load Eccentricity	=	0.0 in

Design Summary

Wall Stability Ratios

Overturning	=	44.03	OK
Sliding	=	5.53	OK
Total Bearing Load	=	11,915 lbs	
...resultant ecc.	=	12.25 in	
Soil Pressure @ Toe	=	1,223 psf	OK
Soil Pressure @ Heel	=	479 psf	OK
Allowable	=	1,580 psf	

Soil Pressure Less Than Allowable

ACI Factored @ Toe	=	1,223 psf	
ACI Factored @ Heel	=	479 psf	
Footing Shear @ Toe	=	0.0 psi	OK
Footing Shear @ Heel	=	22.0 psi	OK
Allowable	=	82.2 psi	

Sliding Calcs (Vertical Component NOT Used)

Lateral Sliding Force	=	826.6 lbs	
less 100% Passive Force	= -	937.5 lbs	
less 100% Friction Force	= -	3,630.0 lbs	
Added Force Req'd	=	0.0 lbs	OK
....for 1.5 : 1 Stability	=	0.0 lbs	OK

Load Factors

Dead Load	1.000
Live Load	1.000
Earth, H	1.000
Wind, W	1.000
Seismic, E	1.000

Stem Construction

Top Stem

		Stem OK
Design Height Above Ftg	ft =	0.00
Wall Material Above "Ht"	=	Concrete
Thickness	in =	48.00
Rebar Size	=	# 8
Rebar Spacing	in =	12.00
Rebar Placed at	=	Edge

Design Data

fb/FB + fa/Fa	=	0.002
Total Force @ Section	lbs =	264.1
Moment....Actual	ft-l =	286.1
Moment.....Allowable	ft-l =	158,990.9
Shear.....Actual	psi =	0.5
Shear.....Allowable	psi =	82.2
Wall Weight	psf =	424.0
Rebar Depth 'd'	in =	45.50
Lap splice if above	in =	42.94
Lap splice if below	in =	15.34
Hook embed into footing	in =	15.34

Concrete Data

f'c	psi =	3,000.0
Fy	psi =	

Cantilevered Retaining Wall

File = R:\10VOB8~Y\VNZUG4~O.EC6
ENERCALC, INC. 1983-2015, Build 6.15.4.11, Ver 6.15.4.11

Lic. # : KW-06009801 Licensee : ENGLEKIRK

Description : Abutment and Footing Design-Lateral-Service: D+0.75L+0.75(0.6W)+H

Footing Dimensions & Strengths

Toe Width	=	0.00 ft
Heel Width	=	14.00
Total Footing Width	=	14.00
Footing Thickness	=	30.00 in
Key Width	=	0.00 in
Key Depth	=	0.00 in
Key Distance from Toe	=	0.00 ft

f'c = 3,000 psi Fy = 60,000 psi
Footing Concrete Density = 150.00 pcf
Min. As % = 0.0018
Cover @ Top 3.00 @ Btm.= 3.00 in

Footing Design Results

		Toe	Heel	
Factored Pressure	=	1,223	479	psf
Mu' : Upward	=	0	0	ft-lb
Mu' : Downward	=	0	0	ft-lb
Mu: Design	=	0	286	ft-lb
Actual 1-Way Shear	=	0.00	22.01	psi
Allow 1-Way Shear	=	0.00	82.16	psi

Toe Reinforcing = # 6 @ 16.00 in
Heel Reinforcing = # 6 @ 16.00 in
Key Reinforcing = None Spec'd

Other Acceptable Sizes & Spacings

Toe: Not req'd, Mu < S * Fr
Heel: Not req'd, Mu < S * Fr
Key: No key defined

Summary of Overturning & Resisting Forces & Moments

Item		.....OVERTURNING..... Force lbs	Distance ft	Moment ft-lb
Heel Active Pressure	=	826.6	1.92	1,584.2
Surcharge over Heel	=			
Toe Active Pressure	=			
Surcharge Over Toe	=			
Adjacent Footing Load	=			
Added Lateral Load	=			
Load @ Stem Above Soil	=			
Total	=	826.6	**O.T.M.** =	1,584.2

Resisting/Overturning Ratio = **44.03**
Vertical Loads used for Soil Pressure = 11,915.0 lbs

		.....RESISTING..... Force lbs	Distance ft	Moment ft-lb
Soil Over Heel	=	3,250.0	9.00	29,250.0
Sloped Soil Over Heel	=			
Surcharge Over Heel	=			
Adjacent Footing Load	=			
Axial Dead Load on Stem	=	500.0	2.00	1,000.0
* Axial Live Load on Stem	=	1,537.0	2.00	3,074.0
Soil Over Toe	=			
Surcharge Over Toe	=			
Stem Weight(s)	=	1,378.0	2.00	2,756.0
Earth @ Stem Transitions	=			
Footing Weight	=	5,250.0	7.00	36,750.0
Key Weight	=			
Vert. Component	=			
Total =		10,378.0 lbs	**R.M. =**	69,756.0

* Axial live load NOT included in total displayed, or used for overturning resistance, but is included for soil pressure calculation.

Cantilevered Retaining Wall

File = R:\10VOB8~Y\VNZUG4~O.EC6
ENERCALC, INC. 1983-2015, Build 6.15.4.11, Ver.6.15.4.11

Lic. # : KW-06009801 Licensee : ENGLEKIRK

Description : Abutment and Footing Design-Lateral-Service: (1+0.10S_DS)D+0.75L+0.525E+H

Calculations per ACI 318-11, ACI 530-11, IBC 2012, CBC 2013, ASCE 7-10

Criteria

Retained Height	=	3.25 ft
Wall height above soil	=	0.00 ft
Slope Behind Wall	=	0.00 : 1
Height of Soil over Toe	=	0.00 in
Water height over heel	=	0.0 ft

Vertical component of active
Lateral soil pressure options:
NOT USED for Soil Pressure.
NOT USED for Sliding Resistance.
NOT USED for Overturning Resistance.

Soil Data

Allow Soil Bearing	=	1,580.0 psf
Equivalent Fluid Pressure Method		
Heel Active Pressure	=	50.0 psf/ft
Toe Active Pressure	=	50.0 psf/ft
Passive Pressure	=	300.0 psf/ft
Soil Density, Heel	=	110.00 pcf
Soil Density, Toe	=	110.00 pcf
Friction Coeff btwn Ftg & Soil	=	0.350
Soil height to ignore for passive pressure	=	0.00 in

Surcharge Loads

Surcharge Over Heel	=	0.0 psf

NOT Used To Resist Sliding & Overturning

Surcharge Over Toe	=	0.0 psf

NOT Used for Sliding & Overturning

Lateral Load Applied to Stem

Lateral Load	=	840.0 plf
...Height to Top	=	2.25 ft
...Height to Bottom	=	2.00 ft
Wind on Exposed Stem	=	0.0 psf

Adjacent Footing Load

Adjacent Footing Load	=	0.0 lbs
Footing Width	=	0.00 ft
Eccentricity	=	0.00 in
Wall to Ftg CL Dist	=	0.00 ft
Footing Type		Line Load
Base Above/Below Soil at Back of Wall	=	0.0 ft
Poisson's Ratio	=	0.300

Axial Load Applied to Stem

Axial Dead Load	=	550.0 lbs
Axial Live Load	=	1,247.0 lbs
Axial Load Eccentricity	=	0.0 in

Design Summary

Wall Stability Ratios

Overturning	=	30.03	OK
Sliding	=	4.76	OK
Total Bearing Load	=	12,668 lbs	
...resultant ecc.	=	11.36 in	
Soil Pressure @ Toe	=	1,272 psf	OK
Soil Pressure @ Heel	=	538 psf	OK
Allowable	=	1,580 psf	

Soil Pressure Less Than Allowable

ACI Factored @ Toe	=	1,272 psf	
ACI Factored @ Heel	=	538 psf	
Footing Shear @ Toe	=	0.0 psi	OK
Footing Shear @ Heel	=	24.2 psi	OK
Allowable	=	82.2 psi	

Sliding Calcs (Vertical Component NOT Used)

Lateral Sliding Force	=	1,036.6 lbs	
less 100% Passive Force	= -	937.5 lbs	
less 100% Friction Force	= -	3,990.0 lbs	
Added Force Req'd	=	0.0 lbs	OK
....for 1.5 : 1 Stability	=	0.0 lbs	OK

Load Factors

Dead Load	1.000
Live Load	1.000
Earth, H	1.000
Wind, W	1.000
Seismic, E	1.000

Stem Construction

Top Stem

		Stem OK
Design Height Above Ftg	ft =	0.00
Wall Material Above "Ht"	=	Concrete
Thickness	in =	48.00
Rebar Size	=	# 8
Rebar Spacing	in =	12.00
Rebar Placed at	=	Edge

Design Data

fb/FB + fa/Fa	=	0.005
Total Force @ Section	lbs =	474.1
Moment....Actual	ft-l =	732.3
Moment.....Allowable	ft-l =	158,990.9
Shear.....Actual	psi =	0.9
Shear.....Allowable	psi =	82.2
Wall Weight	psf =	468.0
Rebar Depth 'd'	in =	45.50
Lap splice if above	in =	42.94
Lap splice if below	in =	15.34
Hook embed into footing	in =	15.34

Concrete Data

f'c	psi =	3,000.0
Fy	psi =	

Cantilevered Retaining Wall

File = R:\10VOB8~Y\VNZUG4~O.EC6
ENERCALC, INC. 1983-2015, Build:6.15.4.11, Ver:6.15.4.11

Lic. # : KW-06009801 Licensee : ENGLEKIRK

Description : Abutment and Footing Design-Lateral-Service: (1+0.10S_DS)D+0.75L+0.525E+H

Footing Dimensions & Strengths

Toe Width	=	0.00 ft
Heel Width	=	14.00
Total Footing Width	=	14.00
Footing Thickness	=	30.00 in
Key Width	=	0.00 in
Key Depth	=	0.00 in
Key Distance from Toe	=	0.00 ft

f'c = 3,000 psi Fy = 60,000 psi
Footing Concrete Density = 165.00 pcf
Min. As % = 0.0018
Cover @ Top 3.00 @ Btm.= 3.00 in

Footing Design Results

		Toe	Heel	
Factored Pressure	=	1,272	538	psf
Mu' : Upward	=	0	0	ft-lb
Mu' : Downward	=	0	0	ft-lb
Mu: Design	=	0	732	ft-lb
Actual 1-Way Shear	=	0.00	24.21	psi
Allow 1-Way Shear	=	0.00	82.16	psi

Toe Reinforcing = # 6 @ 16.00 in
Heel Reinforcing = # 6 @ 16.00 in
Key Reinforcing = None Spec'd

Other Acceptable Sizes & Spacings

Toe: Not req'd, Mu < S * Fr
Heel: Not req'd, Mu < S * Fr
Key: No key defined

Summary of Overturning & Resisting Forces & Moments

Item		.....OVERTURNING..... Force lbs	Distance ft	Moment ft-lb
Heel Active Pressure	=	826.6	1.92	1,584.2
Surcharge over Heel	=			
Toe Active Pressure	=			
Surcharge Over Toe	=			
Adjacent Footing Load	=			
Added Lateral Load	=	210.0	4.63	971.3
Load @ Stem Above Soil	=			
Total	=	1,036.6	**O.T.M.** =	2,555.5

Resisting/Overturning Ratio = **30.03**
Vertical Loads used for Soil Pressure = 12,668.0 lbs

		.....RESISTING..... Force lbs	Distance ft	Moment ft-lb
Soil Over Heel	=	3,575.0	9.00	32,175.0
Sloped Soil Over Heel	=			
Surcharge Over Heel	=			
Adjacent Footing Load	=			
Axial Dead Load on Stem	=	550.0	2.00	1,100.0
* Axial Live Load on Stem	=	1,247.0	2.00	2,494.0
Soil Over Toe	=			
Surcharge Over Toe	=			
Stem Weight(s)	=	1,521.0	2.00	3,042.0
Earth @ Stem Transitions	=			
Footing Weight	=	5,775.0	7.00	40,425.0
Key Weight	=			
Vert. Component	=			
Total =		11,421.0 lbs	**R.M. =**	76,742.0

* Axial live load NOT included in total displayed, or used for overturning resistance, but is included for soil pressure calculation.

Cantilevered Retaining Wall

File = R:\10VOB8~YWNZUG4~O.EC6
ENERCALC, INC. 1983-2015, Build 6.15.4.11, Ver 6.15.4.11

Lic. # : KW-06009801 Licensee : ENGLEKIRK

Description : Abutment and Footing Design-Lateral-Service: 0.6D+0.6W+H

Calculations per ACI 318-11, ACI 530-11, IBC 2012, CBC 2013, ASCE 7-10

Criteria

Retained Height	=	3.25 ft
Wall height above soil	=	0.00 ft
Slope Behind Wall	=	0.00 : 1
Height of Soil over Toe	=	0.00 in
Water height over heel	=	0.0 ft

Vertical component of active
Lateral soil pressure options:
NOT USED for Soil Pressure.
NOT USED for Sliding Resistance.
NOT USED for Overturning Resistance.

Soil Data

Allow Soil Bearing	=	1,580.0 psf
Equivalent Fluid Pressure Method		
Heel Active Pressure	=	50.0 psf/ft
Toe Active Pressure	=	50.0 psf/ft
Passive Pressure	=	300.0 psf/ft
Soil Density, Heel	=	60.00 pcf
Soil Density, Toe	=	60.00 pcf
Friction Coeff btwn Ftg & Soil	=	0.350
Soil height to ignore for passive pressure	=	0.00 in

Surcharge Loads

Surcharge Over Heel	=	0.0 psf

NOT Used To Resist Sliding & Overturning

Surcharge Over Toe	=	0.0 psf

NOT Used for Sliding & Overturning

Lateral Load Applied to Stem

Lateral Load	=	0.0 plf
...Height to Top	=	2.25 ft
...Height to Bottom	=	2.00 ft
Wind on Exposed Stem	=	0.0 psf

Adjacent Footing Load

Adjacent Footing Load	=	0.0 lbs
Footing Width	=	0.00 ft
Eccentricity	=	0.00 in
Wall to Ftg CL Dist	=	0.00 ft
Footing Type		Line Load
Base Above/Below Soil at Back of Wall	=	0.0 ft
Poisson's Ratio	=	0.300

Axial Load Applied to Stem

Axial Dead Load	=	300.0 lbs
Axial Live Load	=	388.0 lbs
Axial Load Eccentricity	=	0.0 in

Design Summary

Wall Stability Ratios

Overturning	=	26.42	OK
Sliding	=	3.77	OK

Total Bearing Load	=	6,615 lbs	
...resultant ecc.	=	9.54 in	
Soil Pressure @ Toe	=	633 psf	OK
Soil Pressure @ Heel	=	312 psf	OK
Allowable	=	1,580 psf	

Soil Pressure Less Than Allowable

ACI Factored @ Toe	=	633 psf	
ACI Factored @ Heel	=	312 psf	
Footing Shear @ Toe	=	0.0 psi	OK
Footing Shear @ Heel	=	13.2 psi	OK
Allowable	=	82.2 psi	

Sliding Calcs (Vertical Component NOT Used)

Lateral Sliding Force	=	826.6 lbs	
less 100% Passive Force	= -	937.5 lbs	
less 100% Friction Force	= -	2,170.0 lbs	
Added Force Req'd	=	0.0 lbs	OK
....for 1.5 : 1 Stability	=	0.0 lbs	OK

Load Factors

Dead Load	1.000
Live Load	1.000
Earth, H	1.000
Wind, W	1.000
Seismic, E	1.000

Stem Construction

Top Stem

		Stem OK
Design Height Above Ftg	ft =	0.00
Wall Material Above "Ht"	=	Concrete
Thickness	in =	48.00
Rebar Size	=	# 8
Rebar Spacing	in =	12.00
Rebar Placed at	=	Edge

Design Data

fb/FB + fa/Fa	=	0.002
Total Force @ Section	lbs =	264.1
Moment....Actual	ft-l =	286.1
Moment.....Allowable	ft-l =	158,990.9
Shear.....Actual	psi =	0.5
Shear.....Allowable	psi =	82.2
Wall Weight	psf =	254.4
Rebar Depth 'd'	in =	45.50
Lap splice if above	in =	42.94
Lap splice if below	in =	15.34
Hook embed into footing	in =	15.34

Concrete Data

f'c	psi =	3,000.0
Fy	psi =	

Cantilevered Retaining Wall

File = R:\10VOB8~Y\VNZUG4~O.EC6
ENERCALC, INC. 1983-2015, Build 6.15.4.11, Ver:6.15.4.11

Lic. # : KW-06009801 Licensee : ENGLEKIRK

Description : Abutment and Footing Design-Lateral-Service: 0.6D+0.6W+H

Footing Dimensions & Strengths

Toe Width	=	0.00 ft
Heel Width	=	14.00
Total Footing Width	=	14.00
Footing Thickness	=	30.00 in
Key Width	=	0.00 in
Key Depth	=	0.00 in
Key Distance from Toe	=	0.00 ft

f'c = 3,000 psi Fy = 60,000 psi
Footing Concrete Density = 90.00 pcf
Min. As % = 0.0018
Cover @ Top 3.00 @ Btm.= 3.00 in

Footing Design Results

		Toe	Heel	
Factored Pressure	=	633	312	psf
Mu' : Upward	=	0	0	ft-lb
Mu' : Downward	=	0	0	ft-lb
Mu: Design	=	0	286	ft-lb
Actual 1-Way Shear	=	0.00	13.21	psi
Allow 1-Way Shear	=	0.00	82.16	psi

Toe Reinforcing = # 6 @ 16.00 in
Heel Reinforcing = # 6 @ 16.00 in
Key Reinforcing = None Spec'd

Other Acceptable Sizes & Spacings

Toe: Not req'd, Mu < S * Fr
Heel: Not req'd, Mu < S * Fr
Key: No key defined

Summary of Overturning & Resisting Forces & Moments

Item		.....OVERTURNING..... Force lbs	Distance ft	Moment ft-lb
Heel Active Pressure	=	826.6	1.92	1,584.2
Surcharge over Heel	=			
Toe Active Pressure	=			
Surcharge Over Toe	=			
Adjacent Footing Load	=			
Added Lateral Load	=			
Load @ Stem Above Soil	=			
Total	=	826.6	**O.T.M.** =	1,584.2

Resisting/Overturning Ratio = **26.42**
Vertical Loads used for Soil Pressure = 6,614.8 lbs

		.....RESISTING..... Force lbs	Distance ft	Moment ft-lb
Soil Over Heel	=	1,950.0	9.00	17,550.0
Sloped Soil Over Heel	=			
Surcharge Over Heel	=			
Adjacent Footing Load	=			
Axial Dead Load on Stem	=	300.0	2.00	600.0
* Axial Live Load on Stem	=	388.0	2.00	776.0
Soil Over Toe	=			
Surcharge Over Toe	=			
Stem Weight(s)	=	826.8	2.00	1,653.6
Earth @ Stem Transitions	=			
Footing Weight	=	3,150.0	7.00	22,050.0
Key Weight	=			
Vert. Component	=			
Total =		6,226.8 lbs	**R.M. =**	41,853.6

* Axial live load NOT included in total displayed, or used for overturning resistance, but is included for soil pressure calculation.

Cantilevered Retaining Wall

File = R:\10VOB6~Y\VNZUG4~0.EC6
ENERCALC, INC. 1983-2015, Build:6.15.4.11, Ver:6.15.4.11

Lic. # : KW-06009801 Licensee : ENGLEKIRK

Description : Abutment and Footing Design-Lateral-Service: (0.6-0.14S_DS)D+0.7E+H

Calculations per ACI 318-11, ACI 530-11, IBC 2012, CBC 2013, ASCE 7-10

Criteria

Retained Height	=	3.25 ft
Wall height above soil	=	0.00 ft
Slope Behind Wall	=	0.00 : 1
Height of Soil over Toe	=	0.00 in
Water height over heel	=	0.0 ft

Vertical component of active
Lateral soil pressure options:
NOT USED for Soil Pressure.
NOT USED for Sliding Resistance.
NOT USED for Overturning Resistance.

Soil Data

Allow Soil Bearing	=	1,580.0 psf
Equivalent Fluid Pressure Method		
Heel Active Pressure	=	50.0 psf/ft
Toe Active Pressure	=	50.0 psf/ft
Passive Pressure	=	300.0 psf/ft
Soil Density, Heel	=	46.00 pcf
Soil Density, Toe	=	46.00 pcf
Friction Coeff btwn Ftg & Soil	=	0.350
Soil height to ignore for passive pressure	=	0.00 in

Surcharge Loads

Surcharge Over Heel	=	0.0 psf

NOT Used To Resist Sliding & Overturning

Surcharge Over Toe	=	0.0 psf

NOT Used for Sliding & Overturning

Lateral Load Applied to Stem

Lateral Load	=	1,120.0 plf
...Height to Top	=	2.25 ft
...Height to Bottom	=	2.00 ft
Wind on Exposed Stem	=	0.0 psf

Adjacent Footing Load

Adjacent Footing Load	=	0.0 lbs
Footing Width	=	0.00 ft
Eccentricity	=	0.00 in
Wall to Ftg CL Dist	=	0.00 ft
Footing Type		Line Load
Base Above/Below Soil at Back of Wall	=	0.0 ft
Poisson's Ratio	=	0.300

Axial Load Applied to Stem

Axial Dead Load	=	230.0 lbs
Axial Live Load	=	0.0 lbs
Axial Load Eccentricity	=	0.0 in

Design Summary

Wall Stability Ratios

Overturning	=	11.14	OK
Sliding	=	2.36	OK
Total Bearing Load	=	4,774 lbs	
...resultant ecc.	=	10.58 in	
Soil Pressure @ Toe	=	470 psf	OK
Soil Pressure @ Heel	=	212 psf	OK
Allowable	=	1,580 psf	

Soil Pressure Less Than Allowable

ACI Factored @ Toe	=	470 psf	
ACI Factored @ Heel	=	212 psf	
Footing Shear @ Toe	=	0.0 psi	OK
Footing Shear @ Heel	=	10.1 psi	OK
Allowable	=	82.2 psi	

Sliding Calcs (Vertical Component NOT Used)

Lateral Sliding Force	=	1,106.6 lbs	
less 100% Passive Force	= -	937.5 lbs	
less 100% Friction Force	= -	1,670.9 lbs	
Added Force Req'd	=	0.0 lbs	OK
....for 1.5 : 1 Stability	=	0.0 lbs	OK

Load Factors

Dead Load	1.000
Live Load	1.000
Earth, H	1.000
Wind, W	1.000
Seismic, E	1.000

Stem Construction

Top Stem

			Stem OK
Design Height Above Ftg	ft =		0.00
Wall Material Above "Ht"	=		Concrete
Thickness	in =		48.00
Rebar Size	=		# 8
Rebar Spacing	in =		12.00
Rebar Placed at	=		Edge
Design Data			
fb/FB + fa/Fa	=		0.006
Total Force @ Section	lbs =		544.1
Moment....Actual	ft-l =		881.1
Moment.....Allowable	ft-l =		158,990.9
Shear.....Actual	psi =		1.0
Shear.....Allowable	psi =		82.2
Wall Weight	psf =		195.0
Rebar Depth 'd'	in =		45.50
Lap splice if above	in =		42.94
Lap splice if below	in =		15.34
Hook embed into footing	in =		15.34
Concrete Data			
f'c	psi =		3,000.0
Fy	psi =		

Cantilevered Retaining Wall

File = R:\10VOB8~Y\VNZUG4~O.EC6
ENERCALC, INC. 1983-2015, Build:6.15.4.11, Ver:6.15.4.11

Lic. # : KW-06009801 Licensee : ENGLEKIRK

Description : Abutment and Footing Design-Lateral-Service: (0.6-0.14S_DS)D+0.7E+H

Footing Dimensions & Strengths

Toe Width	=	0.00 ft
Heel Width	=	14.00
Total Footing Width	=	14.00
Footing Thickness	=	30.00 in
Key Width	=	0.00 in
Key Depth	=	0.00 in
Key Distance from Toe	=	0.00 ft

f'c = 3,000 psi Fy = 60,000 psi
Footing Concrete Density = 69.00 pcf
Min. As % = 0.0018
Cover @ Top 3.00 @ Btm.= 3.00 in

Footing Design Results

		Toe	Heel	
Factored Pressure	=	470	212	psf
Mu' : Upward	=	0	0	ft-lb
Mu' : Downward	=	0	0	ft-lb
Mu: Design	=	0	881	ft-lb
Actual 1-Way Shear	=	0.00	10.13	psi
Allow 1-Way Shear	=	0.00	82.16	psi

Toe Reinforcing = # 6 @ 16.00 in
Heel Reinforcing = # 6 @ 16.00 in
Key Reinforcing = None Spec'd

Other Acceptable Sizes & Spacings

Toe: Not req'd, Mu < S * Fr
Heel: Not req'd, Mu < S * Fr
Key: No key defined

Summary of Overturning & Resisting Forces & Moments

Item		.....OVERTURNING..... Force lbs	Distance ft	Moment ft-lb
Heel Active Pressure	=	826.6	1.92	1,584.2
Surcharge over Heel	=			
Toe Active Pressure	=			
Surcharge Over Toe	=			
Adjacent Footing Load	=			
Added Lateral Load	=	280.0	4.63	1,295.0
Load @ Stem Above Soil	=			
Total	=	1,106.6	**O.T.M.** =	2,879.2

Resisting/Overturning Ratio = **11.14**
Vertical Loads used for Soil Pressure = 4,773.9 lbs

		.....RESISTING..... Force lbs	Distance ft	Moment ft-lb
Soil Over Heel	=	1,495.0	9.00	13,455.0
Sloped Soil Over Heel	=			
Surcharge Over Heel	=			
Adjacent Footing Load	=			
Axial Dead Load on Stem	=	230.0	2.00	460.0
* Axial Live Load on Stem	=			
Soil Over Toe	=			
Surcharge Over Toe	=			
Stem Weight(s)	=	633.9	2.00	1,267.8
Earth @ Stem Transitions	=			
Footing Weight	=	2,415.0	7.00	16,905.0
Key Weight	=			
Vert. Component	=			
Total =		4,773.9 lbs	**R.M. =**	32,087.8

* Axial live load NOT included in total displayed, or used for overturning resistance, but is included for soil pressure calculation.

NOTES:
1. REFER TO SPECS FOR STRUCTURAL CALCS.
2. STRUCTURAL CALCS TAKE PRECEDENCE OVER DETAIL HERE IN.
3. ALL EXPOSED CONC. SHALL RECEIVE MEDIUM SAND BLAST FINISH.

CONCRETE STRENGTH: f'_c = 4500 psi

(1) UNDISTURBED NATIVE GRADE OR CERTIFIED COMPACTED FILL

(2) FINISH SURFACE

(3) FOR BRIDGE DETAIL, SEE SHEET L-10

(4) CONCRETE FOOTING W/ REBAR

(5) NATURAL COLOR CONCRETE ABUTMENT

(6) ~~#4 VERTICAL REBAR @ 16" O.C.~~ REINF. AS SHOWN

(7) ~~#4 CONT. HORIZONTAL REBAR~~ REINF. AS SHOWN

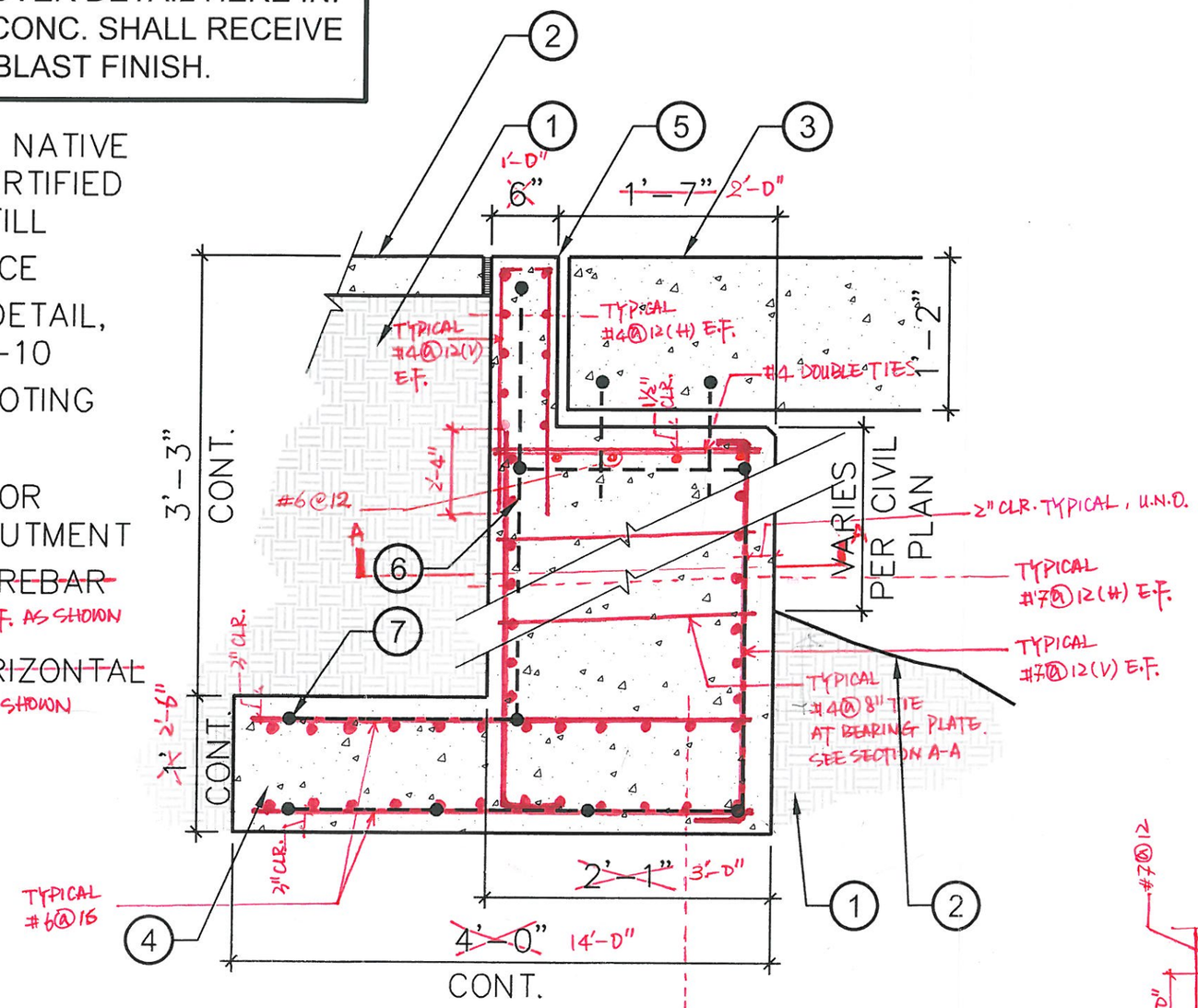

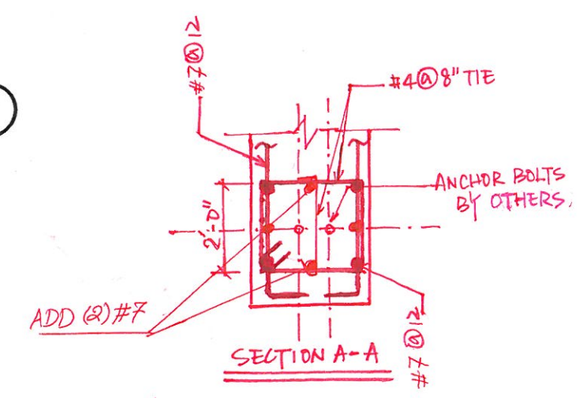

G ABUTMENT

SCALE: 3/4"=1'-0"

APPENDIX F
BRIDGE ABUTMENT DETAIL

NOTES:
1. REFER TO SPECS FOR STRUCTURAL CALCS.
2. STRUCTURAL CALCS TAKE PRECEDENCE OVER DETAIL HERE IN.
3. ALL EXPOSED CONC. SHALL RECEIVE MEDIUM SAND BLAST FINISH.

CONCRETE STRENGTH: f'_c = 4500 psi

(1) UNDISTURBED NATIVE GRADE OR CERTIFIED COMPACTED FILL

(2) FINISH SURFACE

(3) FOR BRIDGE DETAIL, SEE SHEET L-10

(4) CONCRETE FOOTING W/ REBAR

(5) NATURAL COLOR CONCRETE ABUTMENT

(6) ~~#4 VERTICAL REBAR @ 16" O.C.~~ REINF. AS SHOWN

(7) ~~#4 CONT. HORIZONTAL REBAR~~ REINF. AS SHOWN

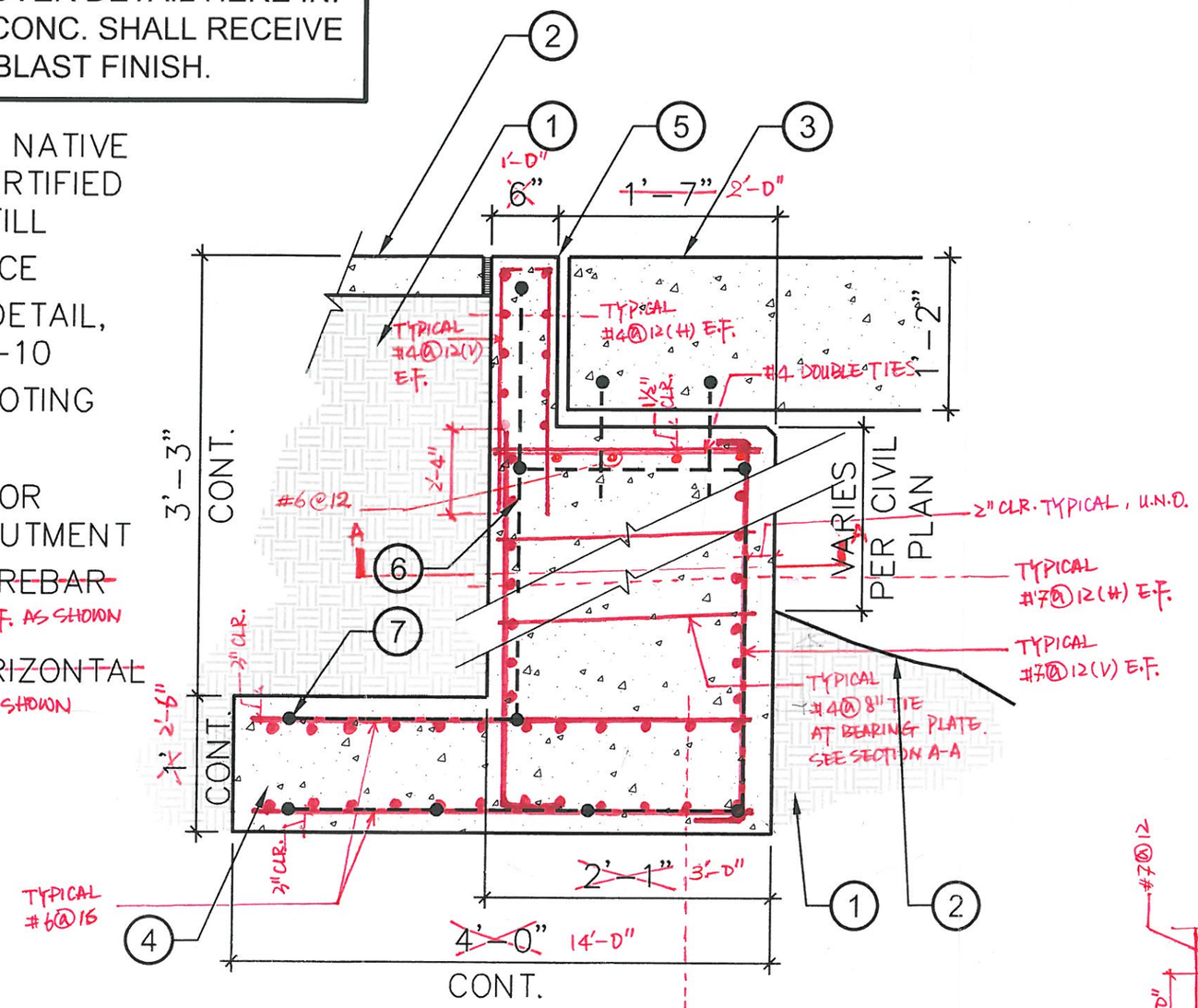

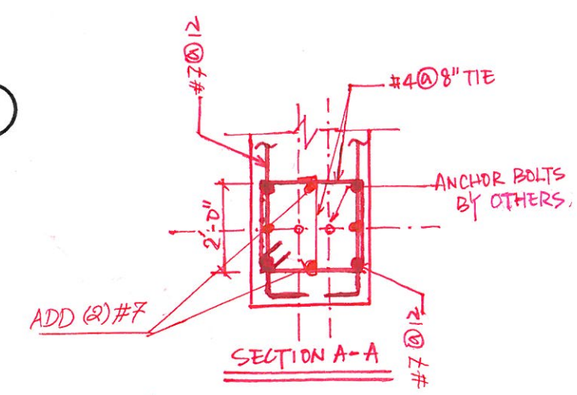

G ABUTMENT

SCALE: 3/4"=1'-0"

APPENDIX G
OUTDOOR LIGHTING COMPLIANCE

CERTIFICATE OF COMPLIANCE	NRCC-LTO-01-E
Outdoor Lighting	(Page 1 of 4)
Project Name: Village Pond Park	Date Prepared: 7-2-2015

A. General Information

Project Address: Village Pond Park, Lake Forest, CA 92630	Total Illuminated Hardscape Area 25,864 sq ft

Phase of Construction: ☐ New Construction ☐ Addition ☒ Alteration

Outdoor Lighting Zone (OLZ) ☐ OLZ-1 ☐ OLZ-2 ☒ OLZ-3 ☐ OLZ-4

I have confirmed with the AHJ which OLZ applies to this site. For default lighting zone designations, see Title 24 Part 6, §10-114

B. LIGHTING COMPLIANCE DOCUMENTS

(check box for each document included)

For detailed instructions on the use of this and all Energy Efficiency Standards compliance documents, refer to the Nonresidential Manual published by the California Energy Commission.

☒	NRCC-LTO-01-E	Certificate of Compliance
☒	NRCC-LTO-02-E	Outdoor Lighting Controls Certificate of Compliance
☐	NRCC-LTO-03-E	Outdoor Lighting Power Allowance Certificate of Compliance

C. Summary of Allowed Outdoor Lighting Power			Watts
1.	**Sum Total ALLOWED** Outdoor Lighting Wattage from NRCC-LTO-03-E, page 1	=	5,038
	Complies ONLY if **Installed ≤ Allowed**		
2.	**Sum Total INSTALLED** Outdoor lighting Wattage from NRCC-LTO-01-E, page 3		2,544

D. Declaration of Required Installation Certificates

Declare by checking all Installation Certificates that will be submitted. (Retain copies and verify forms are completed and signed.)

☐ NRCI-LTO-01-E - Must be submitted for all buildings	☐ Field Inspector
☐ NRCI-LTO-02-E - Must be submitted for a lighting control system, or for an Energy Management Control System (EMCS), to be recognized for compliance.	☐ Field Inspector

E. Declaration of Required Certificates of Acceptance

Declare by checking all of the Certificates of Acceptance that will be submitted. (Retain copies and verify forms are completed and signed.)

☐ NRCA-LTO-02-A - Must be submitted for outdoor lighting controls.	☐ Field Inspector

F. Schedule of luminaires exempt from the outdoor lighting power requirements in §140.7

Name or Symbol	Description of exempt luminaire in accordance with the exemptions

G. Schedule of luminaires exempt from the cutoff requirements in §130.2(b)

Name or Symbol	Description of exempt luminaire in accordance with the exemptions
B	HID/Incandescent underwater fountain luminaire

H. Schedule of luminaires exempt from the outdoor lighting control requirements in §130.2(c)

Name or Symbol	Description of exempt luminaire in accordance with the exemptions

I. Outdoor Lighting Schedule and Field Inspection Energy Checklist

Luminaire Schedule		Installed Watts					Location	Cutoff	Field Inspector	
A	B	C	D		E	F	G	H	I	
Name or Item Tag	Complete Luminaire Description	Watts per Luminaire	How wattage was determined: CEC Default from NA8	How wattage was determined: According to §130.0(c)	Number of Luminaires	Total Installed Watts in this area (C x E)	Primary Function area in which these luminaires are installed	BUG Rating	Pass	Fail
A	LED pathway luminaire	50	☒	☐	44	2200	Pathways	B1 U0 G1	☐	☐
B	Incand/HID underwater fountain luminaire	100	☐	☒	3	300	Fountain	N/A	☐	☐
C	LED pathway bollard	22	☒	☐	2	44	Pathways	N/A	☐	☐
			☐	☐					☐	☐
			☐	☐					☐	☐
			☐	☐					☐	☐
			☐	☐					☐	☐
			☐	☐					☐	☐
			☐	☐					☐	☐
			☐	☐					☐	☐
			☐	☐					☐	☐
			☐	☐					☐	☐
			☐	☐					☐	☐
			☐	☐					☐	☐
			☐	☐					☐	☐
			☐	☐					☐	☐
			☐	☐					☐	☐
			☐	☐					☐	☐
			☐	☐					☐	☐
			☐	☐					☐	☐
			☐	☐					☐	☐
					INSTALLED WATTS PAGE TOTAL:	2544	Enter sum total of all pages (**Sum Total INSTALLED** Outdoor lighting wattage) into NRCC-LTO-01-E; Page 1		2544	

CERTIFICATE OF COMPLIANCE	NRCC-LTO-01-E
Outdoor Lighting	(Page 4 of 4)
Project Name: Village Pond Park	Date Prepared: 7-2-2015

DOCUMENTATION AUTHOR'S DECLARATION STATEMENT	
1. I certify that this Certificate of Compliance documentation is accurate and complete.	
Documentation Author Name: Christopher D. Karjala	Documentation Author Signature: X
Company: CD Design Group	Signature Date: 7-2-2015
Address: P.O. Box 4107	CEA Certification Identification (if applicable):
City/State/Zip: Irvine, CA 92616-4107	Phone: (949) 387-8476

RESPONSIBLE PERSON'S DECLARATION STATEMENT

I certify the following under penalty of perjury, under the laws of the State of California:

1. The information provided on this Certificate of Compliance is true and correct.
2. I am eligible under Division 3 of the Business and Professions Code to accept responsibility for the building design or system design identified on this Certificate of Compliance (responsible designer).
3. The energy features and performance specifications, materials, components, and manufactured devices for the building design or system design identified on this Certificate of Compliance conform to the requirements of Title 24, Part 1 and Part 6 of the California Code of Regulations.
4. The building design features or system design features identified on this Certificate of Compliance are consistent with the information provided on other applicable compliance documents, worksheets, calculations, plans and specifications submitted to the enforcement agency for approval with this building permit application.
5. I will ensure that a completed signed copy of this Certificate of Compliance shall be made available with the building permit(s) issued for the building, and made available to the enforcement agency for all applicable inspections. I understand that a completed signed copy of this Certificate of Compliance is required to be included with the documentation the builder provides to the building owner at occupancy.

Responsible Designer Name: Dale C. Karjala, P.E.	Responsible Designer Signature: X
Company : CD Design Group	Date Signed: 7-2-2015
Address: P.O. Box 4107	License: E-7338
City/State/Zip: Irvine, CA 92616-4107	Phone: (949) 387-8476

APPENDIX H
OUTDOOR LIGHTING CONTROLS

OUTDOOR LIGHTING CONTROLS

The NRCC-LTO-02-E shall be used to document all mandatory outdoor lighting controls that are applicable to the project.

A. Mandatory Outdoor Lighting Control Declaration Statements

Check all that apply:

- ☐ Lighting shall be controlled by self-contained lighting control devices which are certified to the Energy Commission according to the Title 20 Appliance Efficiency Regulations in accordance with §110.9(a).
- ☐ Lighting shall be controlled by a lighting control system or energy management control system in accordance with §110.9. An Installation Certificate shall be submitted in accordance with §130.4(b).
- ☐ All lighting controls and equipment shall comply with the applicable requirements in §110.9 and shall be installed in accordance with the manufacturer's instructions in accordance with §130.1
- ☒ Part-Night Outdoor Lighting Controls, as defined in Section 100.1(b), shall meet the requirements in Section 110.9(b)5
- ☐ All outdoor incandescent luminaires rated over 100 watts, determined in accordance with Section 130.0(c), shall be controlled by a motion sensor.
- ☐ All outdoor luminaires rated for use with lamps greater than 150 lamp watts, determined in accordance with Section 130.0(c), shall comply with Backlight, Uplight, and Glare (collectively referred to as "BUG") in accordance with Section 130.2(b)
- ☒ All installed outdoor lighting shall be controlled by a photocontrol or outdoor astronomical time-switch control in accordance with Section 130.2(c)1
- ☒ All installed outdoor lighting shall be circuited and independently controlled from other electrical loads by an automatic scheduling control in accordance with Section 130.2(c)2
- ☒ All installed outdoor lighting, where the bottom of the luminaire is mounted 24 feet or less above the ground, shall be controlled with automatic lighting controls in accordance with Section 130.2(c)3
- ☐ For Outdoor Sales Frontage, Outdoor Sales Lots, and Outdoor Sales Canopies lighting, an automatic lighting control in accordance with Section 130.2(c)4
- ☐ For Building Facade, Ornamental Hardscape and Outdoor Dining lighting, an automatic lighting control in accordance with Section 130.2(c)5
- ☒ Before an occupancy permit is granted for a newly constructed building or area, or a new lighting system serving a building, area, or site is operated for normal use, indoor lighting controls serving the building, area, or site shall be certified as meeting the Acceptance Requirements for Code Compliance in accordance with §130.4.(a). Outdoor lighting controls shall comply with the applicable requirements of Section 130.2(c) and Reference Nonresidential Appendix NA7.8

B. Mandatory Outdoor Lighting Control Schedule and Field Inspection Checklist

Outdoor Lighting Control Schedule			Standards Complying With (✓ all that apply, or enter 'E' if Exempted)						✓ if Acceptance Test Required	Field Inspector	
A	B	C	D	E	F	G	H	I	J	K	
Location and Application of Luminaires being controlled	Type/ Description of Lighting Control (i.e. motion sensor, photocontrol, outdoor astronomical time-switch control, centralized time-based zone lighting control)	# of Units	§130.2(a)	§130.2(c)1	§130.2(c)2	§130.2(c)3	§130.2(c)4	§130.2(c)5		Pass	Fail
Type A&C pathway luminaires	Master control photocell & timeclock	46	X	X	X	X				☐	☐
		1 + 1								☐	☐
										☐	☐
										☐	☐
										☐	☐
										☐	☐
										☐	☐
										☐	☐
										☐	☐
										☐	☐
										☐	☐
										☐	☐
										☐	☐
										☐	☐
										☐	☐
										☐	☐
										☐	☐

CERTIFICATE OF COMPLIANCE	NRCC-LTO-02-E
Outdoor Lighting Controls	(Page 3 of 3)
Project Name: Village Pond Park	Date Prepared: 7-2-2015

DOCUMENTATION AUTHOR'S DECLARATION STATEMENT	
1. I certify that this Certificate of Compliance documentation is accurate and complete.	
Documentation Author Name: Christopher D. Karjala	Documentation Author Signature: X
Company: CD Design Group	Signature Date: 7-2-2015
Address: P.O. Box 4107	CEA Certification Identification (if applicable):
City/State/Zip: Irvine, CA 92616-4107	Phone: (949) 387-8476

RESPONSIBLE PERSON'S DECLARATION STATEMENT

I certify the following under penalty of perjury, under the laws of the State of California:

1. The information provided on this Certificate of Compliance is true and correct.
2. I am eligible under Division 3 of the Business and Professions Code to accept responsibility for the building design or system design identified on this Certificate of Compliance (responsible designer).
3. The energy features and performance specifications, materials, components, and manufactured devices for the building design or system design identified on this Certificate of Compliance conform to the requirements of Title 24, Part 1 and Part 6 of the California Code of Regulations.
4. The building design features or system design features identified on this Certificate of Compliance are consistent with the information provided on other applicable compliance documents, worksheets, calculations, plans and specifications submitted to the enforcement agency for approval with this building permit application.
5. I will ensure that a completed signed copy of this Certificate of Compliance shall be made available with the building permit(s) issued for the building, and made available to the enforcement agency for all applicable inspections. I understand that a completed signed copy of this Certificate of Compliance is required to be included with the documentation the builder provides to the building owner at occupancy.

Responsible Designer Name: Dale C. Karjala, P.E.	Responsible Designer Signature: X
Company : CD Design Group	Date Signed: 7-2-2015
Address: P.O. Box 4107	License: E-7338
City/State/Zip: Irvine, CA 92616-4107	Phone: (949) 387-8476

APPENDIX I
OUTDOOR LIGHTING POWER

OUTDOOR LIGHTING POWER ALLOWANCES

CERTIFICATE OF COMPLIANCE	NRCC-LTO-03-E
Outdoor Lighting Power Allowances	(Page 1 of 4)
Project Name: Village Pond Park	Date Prepared: 7-2-2015

A. OUTDOOR LIGHTING POWER ALLOWANCE SUMMARY

1. General Hardscape Lighting Power Allowance (Site Total from Section B of NRCC-LTO-03-E)	1. 5,038W

2. Additional Specific "use it or lose it" Lighting Power Allowances listed in each of these cells shall be identical to total allowed watts determined in Section C-1 to C-4 of NRCC-LTO-03-E.

PER APPLICATION from Section C-1		PER UNIT LENGTH (SALES FRONTAGE) from Section C-2		PER HARDSCAPE AREA (ORNAMENTAL LIGHTING) from Section C-3		PER SPECIFIC AREA from Section C-4.		
5,038	+	-	+	-	+	-	=	2. 5,038W

3. **Sum Total ALLOWED** Outdoor Lighting Wattage (add rows 1 and 2)	3. 5,038W

B. GENERAL HARDSCAPE LIGHTING POWER ALLOWANCE FROM TABLE 140.7-A

Area Wattage Allowance (AWA)				Linear Wattage Allowance (LWA)			Initial Wattage Allowance (IWA)	Total General Hardscape Lighting Allowance
A	B	C	D	E	F	G	H	I
Name of area	Illuminated Hardscape Area	AWA Per Square Foot	AWA (B x C)	Perimeter Length of General Hardscape	LPA per Linear Foot	LWA (E x F)	IWA (Watts)	D + G + H
Pathways	25,864 sq ft	0.09w	2,328w	3,233 l.f.	0.60w	1,940w	770w	5,038W
							TOTAL	5,038W

CERTIFICATE OF COMPLIANCE	NRCC-LTO-03-E
Outdoor Lighting Power Allowances	(Page 2 of 4)
Project Name: Village Pond Park	Date Prepared: 7-2-2015

C. ADDITIONAL "USE IT OR LOSE IT" OUTDOOR LIGHTING POWER ALLOWANCES FOR SPECIFIC APPLICATIONS

☐ The additional specific outdoor lighting power allowance shall be the smaller of the allowed lighting power or the actual lighting power used.

☐ Use Outdoor Lighting Zone (OLZ) that is documented on page 1 of NRCC-LTO-01-E to calculate the specific wattage allowances.

C-1. WATTAGE ALLOWANCE PER APPLICATION – Table 140.7-B

☐ Available only for qualifying locations, which include Building Entrances or Exits; Primary Entrances to Senior Care Facilities, Police Stations, Hospitals, Fire Stations, and Emergency Vehicle Facilities; Drive Up Windows; Vehicle Service Station Uncovered Fuel Dispenser

☐ If more than one luminaire type is used per location, use multiple rows for that location

A	B	C	D	E	F	G	H	I	J
	ALLOTTED WATTS			DESIGN WATTS					
Name of Location for which allowance is claimed	Number of qualifying locations	Wattage Allowance per qualifying location	Allotted Watts (B x C)	Luminaire Code or Symbol	Luminaire Description	Luminaire Quantity	Watts per luminaire	Design Watts (G x H)	Allowed Watts (smaller of D or I)
								Sum total allowance per application on this site:	

C-2. WATTAGE ALLOWANCE PER UNIT LENGTH (Sales Frontage) from Table 140.7-B

☐ If more than one luminaire type is used per location, use multiple rows for that location

A	B	C	D	E	F	G	H	I	J
	ALLOTTED WATTS			DESIGN WATTS					
Name of Location for which allowance is claimed	Linear feet of Sales Frontage	Wattage Allowance per linear foot	Allotted Watts (B x C)	Luminaire Code or Symbol	Luminaire Description	Luminaire Quantity	Watts per luminaire	Design Watts (G x H)	Allowed Watts (smaller of D or I)
								Sum total allowance for sales frontage on the site:.	

CERTIFICATE OF COMPLIANCE	NRCC-LTO-03-E
Outdoor Lighting Power Allowances	(Page 3 of 4)
Project Name: Village Pond Park	Date Prepared: 7-2-2015

C-3. WATTAGE ALLOWANCE PER SQUARE FOOT OF HARDSCAPE AREA (Ornamental Lighting) – Table 140.7-B

☐ Allowance for the total site illuminated hardscape area. Luminaires qualifying for this allowance shall be rated for 100 watts or less as determined in accordance with Section 130.0(c), and shall be post-top luminaires, lanterns, pendant luminaires, or chandeliers.

☐ If more than one luminaire type is used per location, use multiple rows for that location

A	B	C	D	E	F	G	H	I	J
	ALLOTTED WATTS			DESIGN WATTS					
Name of area for which ornamental allowance is claimed	Square feet of Hardscape	Wattage Allowance per square foot	Allotted Watts (B x C)	Luminaire Code or Symbol	Luminaire Description	Luminaire Quantity	Watts per luminaire	Design Watts (G x H)	Allowed Watts (smaller of D or I)
Sum total allowance for ornamental lighting on the site:.									

C-4. WATTAGE ALLOWANCE PER SQUARE FOOT OF SPECIFIC AREA - Table 140.7-B

☐ Allowances for Building Facades; Outdoor Sales Lots; Vehicle Service Station Hardscape; Vehicle Service Station Canopies; Sales Canopies; Non-sales Canopies; Guard Stations; Student Pick-up/Drop-off zone: Outdoor Dining; Special Security Lighting for Retail Parking and Pedestrian Hardscape.

☐ If more than one luminaire type is used per location, use multiple rows for that location

A	B	C	D	E	F	G	H	I	J
	ALLOTTED WATTS			DESIGN WATTS					
Name of Location for which allowance is claimed	Illuminated Area of Application	Wattage Allowance per square foot	Allotted Watts (B x C)	Luminaire Code or Symbol	Luminaire Description	Luminaire Quantity	Watts per luminaire	Design Watts (G x H)	Allowed Watts (smaller of D or I)
Sum total allowance for specific area on the site:									

CERTIFICATE OF COMPLIANCE	NRCC-LTO-03-E
Outdoor Lighting Power Allowances	(Page 4 of 4)
Project Name: Village Pond Park	Date Prepared: 7-2-2015

DOCUMENTATION AUTHOR'S DECLARATION STATEMENT	
1. I certify that this Certificate of Compliance documentation is accurate and complete.	
Documentation Author Name: Christopher D. Karjala	Documentation Author Signature: X
Company: CD Design Group	Signature Date: 7-2-2015
Address: P.O. Box 4107	CEA Certification Identification (if applicable):
City/State/Zip: Irvine, CA 92616-4107	Phone: (949) 387-8476

RESPONSIBLE PERSON'S DECLARATION STATEMENT

I certify the following under penalty of perjury, under the laws of the State of California:

1. The information provided on this Certificate of Compliance is true and correct.
2. I am eligible under Division 3 of the Business and Professions Code to accept responsibility for the building design or system design identified on this Certificate of Compliance (responsible designer).
3. The energy features and performance specifications, materials, components, and manufactured devices for the building design or system design identified on this Certificate of Compliance conform to the requirements of Title 24, Part 1 and Part 6 of the California Code of Regulations.
4. The building design features or system design features identified on this Certificate of Compliance are consistent with the information provided on other applicable compliance documents, worksheets, calculations, plans and specifications submitted to the enforcement agency for approval with this building permit application.
5. I will ensure that a completed signed copy of this Certificate of Compliance shall be made available with the building permit(s) issued for the building, and made available to the enforcement agency for all applicable inspections. I understand that a completed signed copy of this Certificate of Compliance is required to be included with the documentation the builder provides to the building owner at occupancy.

Responsible Designer Name: Dale C. Karjala, P.E.	Responsible Designer Signature: X
Company : CD Design Group	Date Signed: 7-2-2015
Address: P.O. Box 4107	License: E-7338
City/State/Zip: Irvine, CA 92616-4107	Phone: (949) 387-8476

APPENDIX J
GEOTECHNICAL REPORT
(INFORMATIONAL ONLY)

Converse Consultants

Geotechnical Engineering, Environmental & Groundwater Science, Inspection & Testing Services

GEOTECHNICAL STUDY REPORT
Proposed Village Pond Park
23102 Ridge Route Drive
Lake Forest, California

Converse Project No. 15-32-162-01

May 31, 2016

Prepared For:

City of Lake Forest
25550 Commercentre Drive
Lake Forest, California 92630

Prepared By:

Converse Consultants
3176 Pullman Street, Suite 108
Costa Mesa, California 92626

Converse Consultants
Geotechnical Engineering, Environmental & Groundwater Science, Inspection & Testing Services

May 31, 2016

Mr. Douglas Erdman, PE
Principal Civil Engineer
City of Lake Forest
25550 Commercentre Drive
Lake Forest, California 92630

Subject: **GEOTECHNICAL STUDY REPORT**
Proposed Village Pond Park
23102 Ridge Route Drive
Lake Forest, California
Converse Project No. 15-32-162-01

Dear Mr. Erdman,

Converse Consultants (Converse) has prepared this report presenting the results of our geotechnical study for the Village Pond Park Project in the City of Lake Forest, California. This report was prepared in accordance with our proposal dated December 28, 2015.

Based on our background review, field exploration, laboratory testing, geologic evaluation and geotechnical analysis, the site is suitable from a geotechnical standpoint for the proposed project, provided our conclusions and recommendations are implemented during design and construction.

We appreciate the opportunity to be of service to the City of Lake Forest. If you have any questions, please do not hesitate to contact us at (626) 930-1200.

CONVERSE CONSULTANTS

Siva K. Sivathasan, PhD, PE, GE, DGE, QSD, F. ASCE
Senior Vice President / Principal Engineer

REGISTERED PROFESSIONAL ENGINEER
KATHIRAVETPILLAI SIVATHASAN
No. 2708
Exp 6-30-18
GEOTECHNICAL
STATE OF CALIFORNIA

Dist.: 5/Addressee

EXECUTIVE SUMMARY

The following is a summary of our geotechnical study, conclusions and recommendations, as presented in the body of this report. Please refer to the appropriate sections of the report for complete conclusions and recommendations. In the event of a conflict between this summary and the report, or an omission in the summary, the report shall prevail.

- The project site is located at 23102 Ridge Route Road within the City of Lake Forest, California. The proposed project involves site improvements as part of the revitalization of the Village Pond Park including the construction of a new 30-foot-long pedestrian bridge, a new entry overhead structure, picnic tables and benching. The structure loads are anticipated to be moderate on the scale of 13,000 pounds.

- A pond depth survey was conducted by Converse geologists on February 9 & 10, 2016 and included collecting 120 depth readings to gauge the volume of soft sediments and firm bottom depths of the pond. The 120 survey points were laid out on a 20' x 20' grid system at specific and methodical locations and then measured using a boat. Depths to soft sediments were obtained using a tape measure and depths to firm bottoms were obtained using a steel rod that was pushed into the bottom sediments to establish firm bottom depth elevations.

- A total of six (6) borings (BH-1 through BH-6) were drilled within the project site on February 12, 2016. The borings were advanced using a truck mounted drill rig with an 8-inch outer diameter hollow-stem auger to depths ranging from 11.5 to 51.5 feet below existing ground surface (bgs) for geotechnical study.

- There are no active faults projecting toward or extending across the proposed site. The site is not located within a currently designated State of California Earthquake Fault Zone. Moderate to strong ground shaking from earthquakes associated with the Newport-Inglewood Fault and other nearby and distant faults may occur during the lifetime of the project.

- The site is not located within a potential liquefaction zone per the State of California Seismic Hazard Zones Map for the Lake Forest Quadrangle. The results of liquefaction analyses indicate the site soils are not susceptible to liquefaction. The estimated potential seismically induced settlement is anticipated to be less than 0.25 inches with potential differential settlement of approximately 0.15 inches over a distance of 30 feet.

- Undocumented fill consisting of clayey sand and silty sand were encountered up to five (5) feet in depth at the sites. Deeper artificial fill may exist at the site. The fills are generally moderately dense. Undocumented fill should be excavated and recompacted. The alluvial sediments consist predominately of layered sandy clays,

Copyright 2016 Converse Consultants

sandy silts, clayey sands and silty sands up to a depth of approximately 51.5 feet below ground surface.

- During our exploration, groundwater was encountered at 30 feet and 42 feet below ground surface at borings BH-1 and BH-2, respectively. The regional groundwater table should be expected to be encountered during the planned construction, specifically for bridge pier foundations.

- The surficial site soils at the site exhibit a “Low” expansive potential. Mitigation for expansive soil may be considered during grading operations.

- Site soils have “moderate” concentrations of water soluble sulfates. In general, the pH value, chloride content, and sulfate content of the site soils are in the non-corrosive range. However, the saturated resistivity of the site soils is in the corrosive range to ferrous metals.

- Remedial grading will be required to prepare the sites for support of the proposed landscape mounds and structures.

- Based on our field exploration, the earth materials at the site can be excavatable with conventional heavy-duty earth moving, drilling, and trenching equipment.

- Shallow spread footings and pier footings are considered suitable for structural support provided the recommendations in this report are incorporated into the project plans, specifications, and are followed during site construction.

Based on our geotechnical study, it is our opinion that the project site is suitable for the proposed development, provided the findings and conclusions presented in this geotechnical study report are incorporated in the planning, design and construction of the project.

Copyright 2016 Converse Consultants

PROFESSIONAL CERTIFICATION

This report for the Proposed Village Pond Park located in the City of Lake Forest, California, has been prepared by the staff of Converse under the professional supervision of the individuals whose seals and signatures appear hereon.

The findings, recommendations, specifications or professional opinions contained in this report were prepared in accordance with generally accepted professional engineering and engineering geologic principles and practice in this area of Southern California. There is no warranty, either expressed or implied.

In the event that changes to the property occur, or additional relevant information about the property is brought to our attention, the conclusions contained in this report may not be valid unless these changes and additional relevant information are reviewed and the recommendations of this report are modified or verified in writing.

Mohammad-Sad Malim, EIT
Senior Staff Engineer

PROFESSIONAL GEOLOGIST
MARK B. SCHLUTER
No. 1415
CERTIFIED
ENGINEERING
GEOLOGIST
STATE OF CALIFORNIA

Mark B. Schluter, PG, CEG, CHG
Senior Engineering Geologist

REGISTERED PROFESSIONAL ENGINEER
KATHIRAVETPILLAI SIVATHASAN
No. 2708
Exp 6-30-18
GEOTECHNICAL
STATE OF CALIFORNIA

Siva K. Sivathasan, PhD, PE, GE, DGE, QSD, F. ASCE
Senior Vice President / Principal Engineer

Copyright 2016 Converse Consultants

TABLE OF CONTENTS

1.0 INTRODUCTION 1

2.0 SITE AND PROJECT DESCRIPTION 1

3.0 SCOPE OF WORK 1

3.1 SITE RECONNAISSANCE 1
3.2 FIELD EXPLORATION 2
3.3 LABORATORY TESTING 3
3.4 ANALYSIS AND REPORT PREPARATION 4

4.0 LANDSCAPE AND ENVIRONMENTAL SOIL SAMPLING AND TESTING 4

4.1 LANDSCAPE SOIL SAMPLING AND TESTING 4
4.2 ENVIRONMENTAL SOIL SAMPLING AND TESTING 4

5.0 GEOLOGIC CONDITIONS 5

5.1 REGIONAL GEOLOGY 5
5.2 SUBSURFACE PROFILE OF PROJECT SITE 5
5.3 GROUNDWATER 5
5.4 SUBSURFACE VARIATIONS 6

6.0 FAULTING AND SEISMIC HAZARDS 6

6.1 SEISMIC CHARACTERISTICS OF NEARBY FAULTS 6
6.2 SURFACE FAULT RUPTURE 7
6.3 LIQUEFACTION AND SEISMICALLY-INDUCED SETTLEMENT 7
6.4 LATERAL SPREADING 8
6.5 SEISMICALLY-INDUCED SLOPE INSTABILITY 8
6.6 EARTHQUAKE-INDUCED FLOODING 8
6.7 TSUNAMI AND SEICHES 8

7.0 SEISMIC ANALYSIS 9

8.0 GEOTECHNICAL EVALUATIONS AND CONCLUSIONS 9

9.0 EARTHWORK RECOMMENDATIONS 10

9.1 GENERAL EVALUATION AND SUMMARY 10
9.2 OVER-EXCAVATION/REMOVAL 11
9.3 SUBGRADE PREPARATION 12
9.4 STRUCTURAL FILL 12
9.5 EXCAVATABILITY 13
9.6 EXPANSIVE SOIL 13
9.7 PIPELINE BACKFILL RECOMMENDATIONS 14
9.8 TRENCH ZONE BACKFILL 14
9.9 SHRINKAGE AND SUBSIDENCE 15

10.0 DESIGN RECOMMENDATIONS 16

10.1 SHALLOW FOUNDATIONS 16
10.1.1 Vertical Capacity 16
10.1.2 Lateral Capacity 16

Copyright 2016 Converse Consultants

10.1.3 Settlement *16*
10.1.4 Dynamic Increases *17*
10.2 PIER FOUNDATIONS 17
10.2.1 Vertical Capacity *17*
10.2.2 Lateral Capacity *17*
10.2.3 Settlement *18*
10.2.4 Dynamic Increases *18*
10.3 MODULUS OF SUBGRADE REACTION 18
10.4 SLABS-ON-GRADE 18
10.5 LATERAL EARTH PRESSURE 19
10.6 SOIL CORROSIVITY EVALUATION 20
10.7 SITE DRAINAGE 20

11.0 CONSTRUCTION CONSIDERATIONS 20

11.1 GENERAL 20
11.2 TEMPORARY EXCAVATIONS 21
11.3 SHORING DESIGN 21
11.4 GEOTECHNICAL SERVICES DURING CONSTRUCTION 22

12.0 CLOSURE 23

13.0 REFERENCES 24

TABLES

Page Number
Table No. 1, *CBC Seismic Design Parameters* 9
Table No. 2, *Lateral Earth Pressures for Retaining Wall Design* 19
Table No. 3, *Slope Ratios for Temporary Excavation* 21

DRAWINGS

Following Page Number
Drawing No. 1, *Site Location Map* 1
Drawing No. 2, *Proposed Site Plan and Boring Location Map* 1
Drawing No. 3A, *Site Topography and Soft Bottom* ..... End of Document
Drawing No. 3B, *Site Topography and Firm Bottom* ..... End of Document
Drawing No. 4, *Regional Geologic Map* 5
Drawing No. 5, *Geologic Cross Sections A-A', B-B', C-C', D-D', and E-E'* ..... End of Document
Drawing No. 6, *Seismic Hazard Zones Map* 7
Drawing No. 7, *FEMA Flood Map* 8

APPENDICES

Appendix A ..... *Field Exploration*
Appendix B ..... *Laboratory Testing Program*
Appendix C ..... *Earthwork Specifications*
Appendix D ..... *Liquefaction/Seismic Settlement Analysis*
Appendix E ..... *Landscape Soil Sampling and Testing*
Appendix F ..... *Environmental Soil Sampling and Testing*

Copyright 2016 Converse Consultants

1.0 INTRODUCTION

This report presents the results of our geotechnical study performed for the proposed Village Pond Park Project located in the City of Lake Forest, California, as shown on Drawing No. 1, *Site Location Map*.

This report is written for the project described herein and is intended for use solely by the City of Lake Forest and the project design team. This report should not be used as a bidding document but may be made available to the potential contractors for information on factual data only. For bidding purposes, the contractors should be responsible for making their own interpretation of the data contained in this report.

2.0 SITE AND PROJECT DESCRIPTION

The project site is located at 23102 Ridge Route Road within the City of Lake Forest, California. The subject site is relatively flat, with surface elevations ranging from approximately 356 to 372 feet relative to mean-sea-level (MSL), with a gentle gradient towards the northwest. The site is bounded by Ridge Route Road to the north, by Elrond Lane to the west and by Respit Drive to the south, and by residential homes to the east and southwest. The coordinates at the center of the park site are 33.6260 degrees North latitude and 117.7072 degrees West longitude as shown on Drawing No. 1, *Site Location Map*.

The proposed project involves site improvements as part of the revitalization of the Village Pond Park including the construction of a new 30-foot-long pedestrian bridge, a new entry overhead structure, picnic tables, benches and lake improvements. The structure loads are anticipated to be moderate on the scale of 13,000 pounds. The proposed landscape and structures are shown on Drawing No. 2, *Proposed Site Plan and Boring Location Map*.

3.0 SCOPE OF WORK

The scope of this study includes the following tasks:

3.1 Site Reconnaissance

A site reconnaissance was performed by a member of the Converse staff on January 19, 2016. The purpose of the site reconnaissance was to observe surface conditions and to select exploratory boring locations in accordance with the proposed development. The borings were located using existing boundary features as a guide and should be considered accurate only to the degree implied by the method used.

The approximate locations of the exploratory borings are shown on Drawing No. 2, *Proposed Site Plan and Boring Location Map*.

Copyright 2016 Converse Consultants

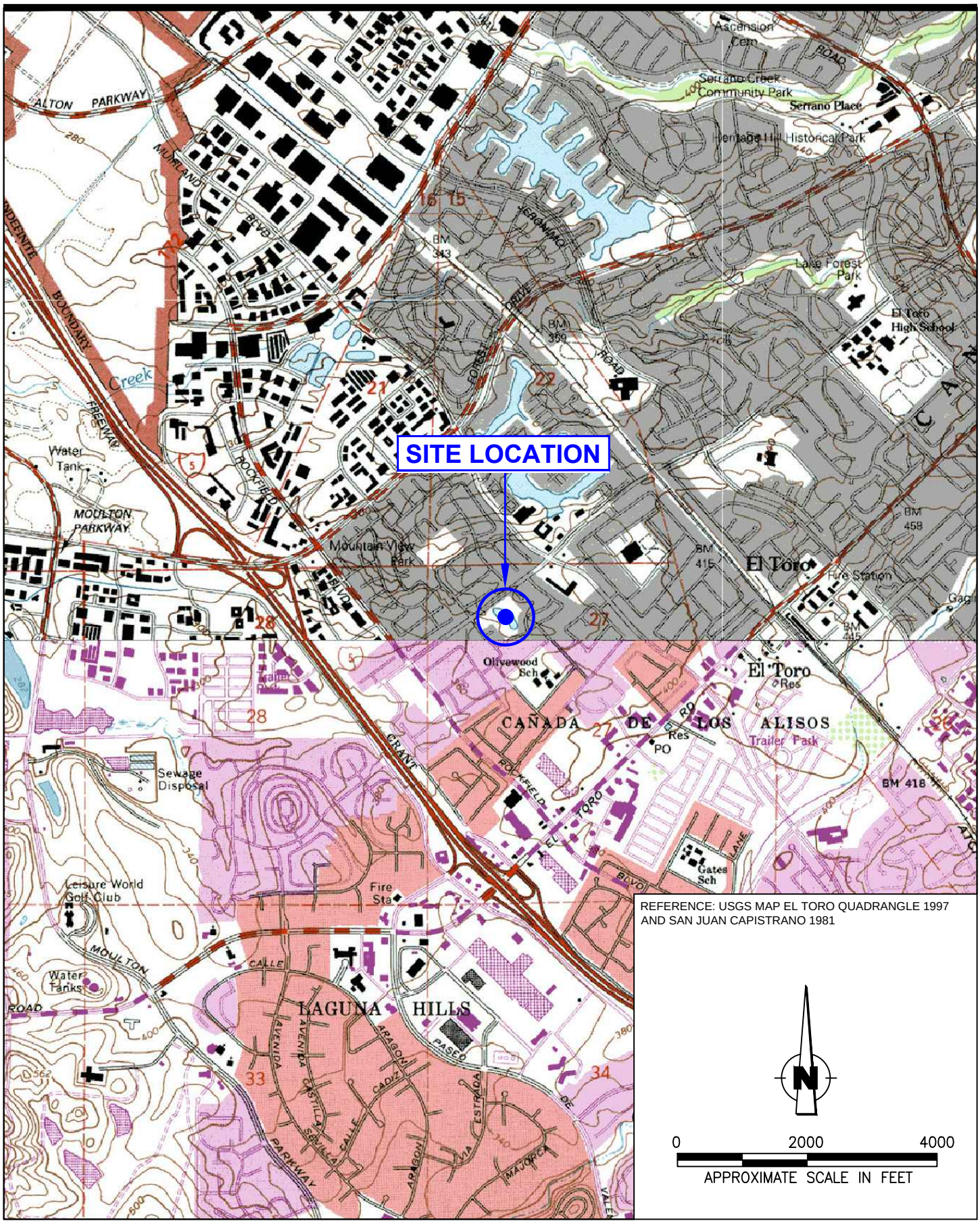

SITE LOCATION MAP

Converse Consultants

VILLAGE POND PARK
23102 RIDGE ROUTE DRIVE
LAKE FOREST, CALIFORNIA
FOR: CITY OF LAKE FOREST

Project No.
15-32-162-01

Drawing No.
1

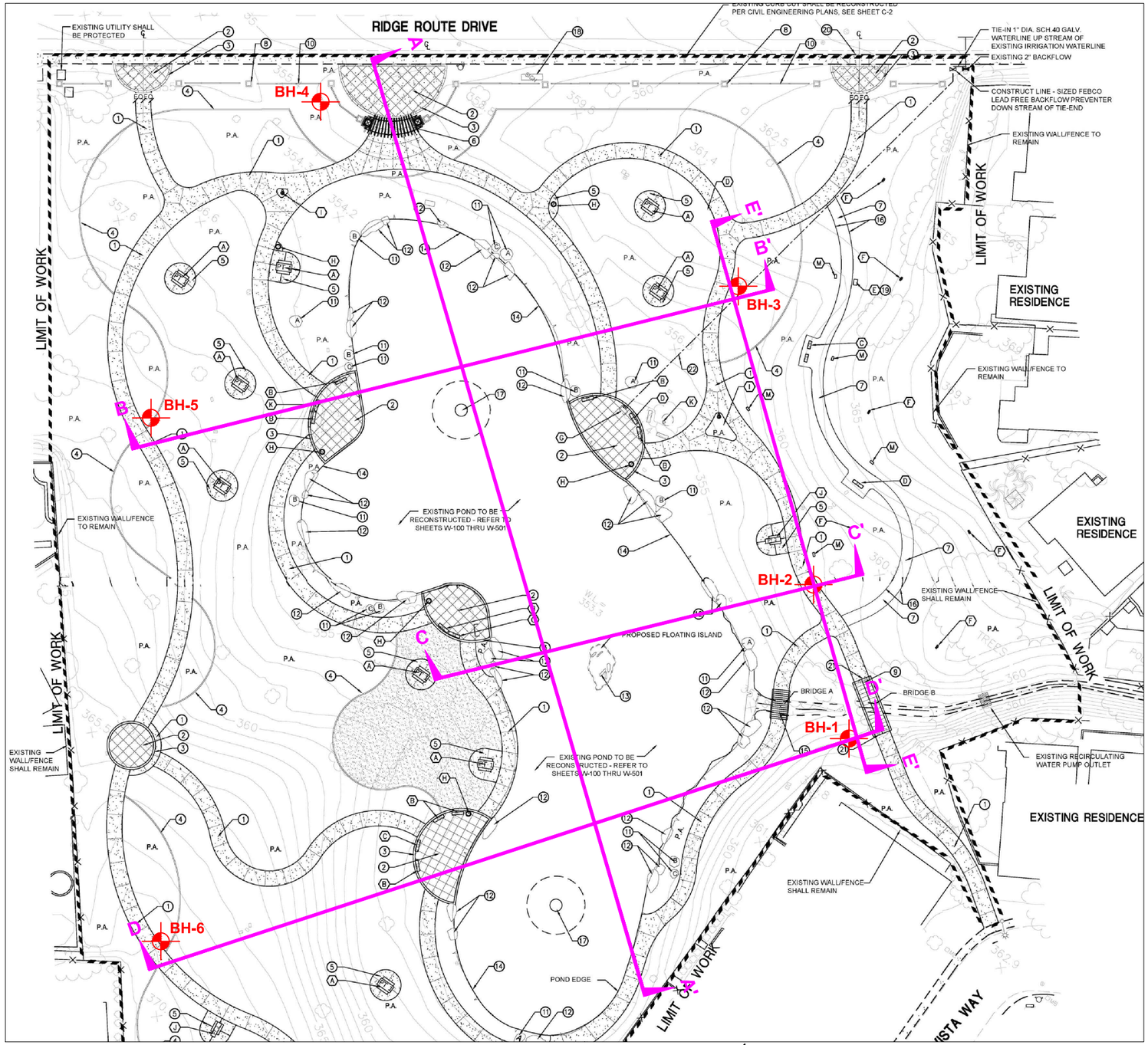

REFERENCE: DRAWING BY NUVIS LANDSCAPE ARCHITECTURE AND PLANNING; SHEET L-6 PROJ. 13-237.03

0 40 80

APPROXIMATE SCALE IN FEET

LEGEND

APPROXIMATE LOCATION OF BORING

GEOLOGIC CROSS SECTION

CONSTRUCTION LEGEND

1. CONCRETE PAVING - REFER TO DETAIL 'A', SHEET L-7
2. ENHANCED CONCRETE PAVING - REFER TO DETAIL 'A', SHEET L-7
3. CONCRETE BAND - REFER TO DETAIL 'B', SHEET L-7
4. CONCRETE MOW STRIP - REFER TO DETAIL 'F', SHEET L-7
5. CONCRETE PAD(PICNIC TABLES) - REFER TO DETAIL 'C', SHEET L-8
6. ENTRY OVERHEAD STRUCTURE - REFER TO DETAIL 'E', SHEET L-9
7. DECOMPOSED GRANITE, COMPACTION REQUIRED - REFER TO DETAIL 'C', SHEET L-7
8. PILASTERS - REFER TO DETAIL 'G', SHEET L-8
9. PEDESTRIAN BRIDGE, BRIDGE 'B' - REFER TO DETAIL 'A', SHEET L-10
10. LODGE POLE FENCE - REFER TO DETAIL 'E', SHEET L-8
11. BOULDERS - AVAILABLE FROM SOUTHWEST BOULDERS 877 792-7625 TYPE-COLORADO MOSS-REFER TO DETAIL 'B', SHEET L-9
12. GFRC BOULDERS -TO BE CONSTRUCTED PER MANUFACTURER'S SPECIFICATIONS SEE DETAIL G, SHEET L-9
13. FLOATING LAKE ISLAND - AVAILABLE FROM AQUABIO, 310-397-3114, OR APPROVED EQUAL. AQUABIO SHALL PROVIDE SHOP DRAWING FOR REVIEW & APPROVAL PRIOR TO CONSTRUCTION, TO ENGINEER.
14. LAKE EDGE - REFER TO SHEET W-200
15. BRIDGE 'A' - REFER TO DETAIL 'F', SHEET L-9
16. RECYCLED HEADER BOARD - REFER TO DETAIL 'C', SHEET L-7
17. GEYSERS - REFER TO FOUNTAIN DETAIL 'C' SHEET W-252
18. MONUMENT SIGN/LOGO REPLACEMENT - REFER TO DETAIL 'F', SHEET L-8
19. INTERPRETIVE SIGN - REFER TO DETAIL 'C', SHEET L-9
20. NEW CURB CUT - REFER TO CIVIL ENGINEERING PLANS
21. ABUTMENT - REFER TO DETAIL G, SHEET L-7
22. 1" DIA. SCH 40 PVC WATERLINE. CONSTRUCT AS SHOWN FROM NEW BACKFLOW TO DRINKING FOUNTAIN, SIM. TO IRRIG. MAINLINE @ 24" DEEP.

SITE AMENITIES LEGEND

- (A) PICNIC TABLE, WABASH VALLEY, MODEL # SG201D AND ADA MODEL #SG201P 6' SINGLE PEDESTAL IN GROUND, COLOR MINT GREEN RAL #6029, FINISH: POWDERCOAT, REFER TO DETAIL 'C', SHEET L-8. AVAILABLE FROM DAVE BANG ASSOCIATES. 800-669-2583
- (B) BACKLESS BENCH, CM-14, COLOR MINT GREEN RAL #6029, 6' LENGTH, AVAILABLE FROM VICTOR STANLEY, 800-368-2573 CM-14 PO DRAWER 330, DUNKIRK, MD 20754 - REFER TO DETAIL 'D', SHEET L-9
- (C) HUMMINGBIRD BENCH, COLOR MINT GREEN RAL #6029, AVAILABLE FROM CRICKET FORGE, 919 680-3513, 214 HUNT STREET, DURHAM, NC 27701- REFER TO DETAIL 'B', SHEET L8
- (D) DRAGONFLY BENCH, COLOR MINT GREEN RAL #6029, AVAILABLE FROM CRICKET FORGE, 919-680-3513. 214 HUNT STREET, DURHAM, NC 27701- REFER TO DETAIL 'D', SHEET L8
- (E) INTERPRETIVE SIGNS, - REFER TO DETAIL 'H', SHEET L-8
- (F) BIRD HOUSE, AVAILABLE FROM DUNCRAFT, 888-879-5095 OR APPR. EQUAL - REFER TO DETAIL 'I', SHEET L-8
- (G) DRINKING FOUNTAIN WITH VALVE, AVAILABLE FROM MDF MODEL 410 SM, ONE BOWL ON ADA ARM W/SS SURFACE CARRIER W/ PET FOUNTAIN,PEDESTAL SURFACE MOUNTED, COLOR MINT GREEN RAL #6029, SMOOTH FINISH, OR APPROVED EQUAL - REFER TO DETAIL 'A', SHEET L-8
- (H) TRASH RECEPTACLE, MODEL # TG2-3001, COLOR MINT GREEN RAL #6029, FINISH: DURACOAT, BY SITE SCAPES, 402-421-9464 OR APPROVED EQUAL - REFER TO DETAIL 'D', SHEET L-7
- (I) DOGGIE WALK, COLOR MINT GREEN RAL #6029, 10' GALVANIZED STEEL POST, #014TRASH BIN, #005DISPENSER, #010SIGN, AVAILABLE FROM DOGGIE WALK, 949-200-1148 REFER TO DETAIL 'E', SHEET L-7
- (J) PICNIC TABLE, WABASH VALLEY, MODEL # SG205D ADA, 8' MULTI PEDESTAL IN GROUND, COLOR MINT GREEN RAL #6029, FINISH: POWDERCOAT, REFER TO DETAIL 'C', SHEET L-8. AVAILABLE FROM DAVE BANG ASSOCIATES. 800-669-2583
- (K) MEMORIAL PLAQUE W/ TWO (2) BENCHES SHALL BE LEFT IN PLACE
- (L) SALVAGED / RELOCATED CITY OF LAKE FOREST PARK RULES SIGN
- (M) RELOCATE EXISTING MEMORIAL PLAQUE

PROPOSED SITE PLAN & BORING LOCATION MAP

Converse Consultants

VILLAGE POND PARK
23102 RIDGE ROUTE DRIVE
LAKE FOREST, CALIFORNIA
FOR: CITY OF LAKE FOREST

Project No.	Drawing No.
15-32-162-01	2

I:\ACADDRAWINGS\15\32\162\GEOTECHREPORT\15-32-162-01_PROPOSED-SITEPLAN.DWG

3.2 Field Exploration

Pond Depth Survey:

Village Pond Park was constructed with a man-made pond. The perimeter of the pond is surrounded by a 5-foot wide concrete walkway. Portions of the concrete walkway around the pond have settled or become uneven due to tree roots. The pond measures approximately 430 feet long and 80 to 190 feet wide. The lake water surface was assumed to be approximate elevation 353.3 feet during our pond survey. The pond outlet drain was covered with sandbags during our site study.

Water in the pond is circulated by three aeration systems located in the deeper portions of the pond and by a pump system that supplies recirculated water to a stream channel on the east side of the lake. The pond contains large boulder size rocks that were placed in the pond bottom to protect the pond bottom from erosion and to provide habitat perches for animals using the pond (turtles and birds).

The pond depth survey was conducted by Converse geologists on February 9 and 10, 2016 and included collecting 120 depth readings to gauge the volume of soft sediments and firm bottom depths of the pond. The 120 survey points were laid out on a 20' x 20' grid system at specific and methodical locations and then measured using a boat. Depths to soft sediment were obtained using a tape measure and depths to firm bottoms were obtained using a steel rod that was pushed into the bottom sediments to establish firm bottom depth elevations. The steel rod passed through the soft sediment layer with little to no resistance.

Based on our pond bottom survey, the pond is estimated to contain approximately 2,662,714 gallons of water (13,184 cubic yards) over a soft sediment layer of approximately 560,843 gallons (2,777 cubic yards). The soft sediment layer is in a suspended water state and is estimated to be approximately 90% water and 10% pond sludge sediment, algae, and duck waste. Once the water content in the soft sediment were removed, the remaining volume of soft sediment materials would be significantly reduced. The depth of the pond ranged from 2 feet to 12.5 feet in the deeper central portion of the pond.

The computer modeled topographic contours of the lake bottom grades for the soft-sediment layer and the firm-sediment bottoms in the pond are shown on Drawing No. 3A, *Site Topography and Soft Bottom* and Drawing No. 3B, *Site Topography and Firm Bottom.*

Three (3) pond sediment samples were collected for landscape soil analysis and environmental soil analysis. The three samples (Pond-1, Pond-2 and Pond-3) were obtained at depths ranging from 8 to 10 feet below the pond water surface (approximate elevation 353.3 feet). The approximate location of the pond sediment sampling areas is

Copyright 2016 Converse Consultants

shown on Drawing No.3A, *Site Topography and Soft Bottom*. Laboratory test results are presented in Appendix E, Landscape Soil Sampling and Testing, and in Appendix F, Environmental Soil Sampling and Testing.

Soil Borings:

A total of six (6) borings (BH-1 through BH-6) were drilled within the project site on February 12, 2016. The borings were advanced using a truck mounted drill rig with an 8-inch outer diameter hollow-stem auger to depths ranging from 11.5 to 51.5 feet below existing ground surface (bgs) for geotechnical study. Each boring was visually logged by a Converse geologist and sampled at regular intervals and at changes in subsurface soils in accordance with the Unified Soil Classification System. Where appropriate, field descriptions and classifications have been modified to reflect laboratory test results. Detailed descriptions of the field exploration and sampling program are presented in Appendix A, *Field Exploration*. California Modified Sampler (Ring samples), Standard Penetration Test samples, and bulk soil samples were obtained from the borings at selected intervals for laboratory testing. All borings were backfilled with soil cuttings on February 12, 2016.

Ring samples of the subsurface materials were obtained at frequent intervals in the exploratory borings using a drive sampler (2.4-inch inside diameter and 3.0-inch outside diameter) lined with sample rings. The steel ring sampler was driven into the bottom of the borehole with successive drops of a 140-pound driving weight falling 30 inches, using an automatic hammer. Samples are retained in brass rings (2.4-inch inside diameter and 1.0-inch in height). The central portion of the sample was retained and carefully sealed in waterproof plastic containers for shipment to the Converse laboratory. Blow counts for each sample interval are presented on the Log of Borings. Bulk samples of typical soil types were also obtained.

Standard Penetration Tests (SPT) were also performed using a standard (1.4-inch inside diameter and 2.0-inch outside diameter) split-barrel sampler. The mechanically driven hammer for the SPT sampler was 140 pounds, failing 30 inches for each blow. The recorded blow counts for every six inches for a total of 1.5 feet of sampler penetration are shown on the Log of Borings. The standard penetration test was performed in accordance with the ASTM Standard D1586 test method.

3.3 Laboratory Testing

Representative samples of the site soils were tested in the laboratory to aid in the soils classification and to evaluate the relevant engineering properties of the site soils. These tests included:

- *In-situ* moisture content and dry density (ASTM Standard D2216)
- Grain Size Distribution (ASTM Standard C136)

Copyright 2016 Converse Consultants

- Percent finer than No. 200 Sieve (ASTM Standard D1140)
- Atterberg Limits (ASTM D4318)
- Maximum dry density and optimum moisture content (ASTM Standard D1557)
- Direct shear (ASTM Standard D3080)
- Consolidation (ASTM Standard D2435)
- Expansion index (ASTM Standard D4829)
- Soil corrosivity tests (Caltrans 643, 422, 417, and 532)

For *in-situ* moisture and dry density data, see the Log of Borings in Appendix A, *Field Exploration*. For a description of the laboratory test methods and test results, see Appendix B, *Laboratory Testing Program*.

3.4 Analysis and Report Preparation

Data obtained from our field exploration and laboratory testing program were compiled and evaluated. Geotechnical analyses of the compiled data were performed and this report was prepared to present our findings, conclusions and recommendations for the proposed development.

4.0 LANDSCAPE AND ENVIRONMENTAL SOIL SAMPLING AND TESTING

4.1 Landscape Soil Sampling and Testing

Six (6) soil samples were collected for landscape soil analysis, three (3) from different locations within the pond (Pond-1, Pond-2 and Pond-3) and three (3) from different locations from within the park (Park-1, Park-2 and Park-3) in soil borings BH-2, BH-4 and BH-6, respectively. The six (6) selected soil samples were mailed to Gro-Power Laboratory for testing and analysis.

Detailed descriptions of the landscape soil sampling and testing program are presented in Appendix E, *Landscape Soil Sampling and Testing*.

4.2 Environmental Soil Sampling and Testing

Three (3) soil samples were collected for environmental analysis, from selected locations within the pond (Pond-1, Pond-2 and Pond-3). The samples were obtained at depths ranging from 8 to 10 feet below pond water surface using a 4-inch diameter hand auger. No groundwater samples were collected for environmental analysis.

The sampling was in general conformance with standard USEPA protocols, including chain of custody documentation. The three (3) selected soil samples from the pond were analyzed by American Environmental Testing Laboratory Inc. for Volatile organic

Copyright 2016 Converse Consultants

compounds (VOCs) using EPA Method 8260B, and for Title 22 CAM metals using EPA Methods 6010B and 7471A.

Detailed descriptions of the environmental sampling and testing program are presented in Appendix F, *Environmental Soil Sampling and Testing*.

5.0 GEOLOGIC CONDITIONS

5.1 Regional Geology

The site is located within the Tustin Plain, which has chief components of younger alluvial sediments derived from the local canyons and washes. The Tustin Plain is part of the coastal section of the Peninsular Range, a geomorphic province that extends 900 miles south of the Los Angeles Basin to the tip of Baja California. This plain separates the Santa Ana Mountains to the north and east, from the San Joaquin Hills to the south. Drawing No. 4, *Regional Geologic Map*, has been prepared to show the location of the site with respect to regional geology.

5.2 Subsurface Profile of Project Site

Based on our soil borings drilled at the site on February 12, 2016 the subsurface soils consist of top soil in lawn areas, artificial fill and native alluvial soils to the maximum explored depth of approximately 51.5 feet below ground surface. Topsoil generally consists of 4 inches of silty sand. Fill soils encountered generally consists of clayey sand and silty sand. Fill encountered in borings ranges from 1 foot to 5 feet in depth. Deeper fill may occur across the site and should be anticipated. Alluvial soils were encountered below the topsoil and/or fill, consisting of layered sandy clays, sandy silts, clayey sands and silty sands to the maximum explored depth of approximately 51.5 feet below ground surface.

Drawing No. 5, *Geologic Cross Sections A-A', B-B', C-C', D-D', and E-E'* are prepared to illustrate the subsurface conditions of the project site. For a detailed description of the materials encountered during our exploration, see Appendix A*, Field Exploration.*

5.3 Groundwater

Groundwater was encountered at 30 feet and 42 feet below ground surface at borings BH-1 and BH-2, respectively, during the drilling. Review of the Seismic Hazard Evaluation Report for the Lake Forest 7.5-minute Quadrangle (2000) indicates the historical high groundwater level is greater than 10 feet below existing ground surface.

In general, groundwater levels fluctuate with the seasons and local zones of perched groundwater and seepage may be present within the near-surface terrace deposits and bedrock fractures due to local conditions or during rainy seasons. Groundwater conditions

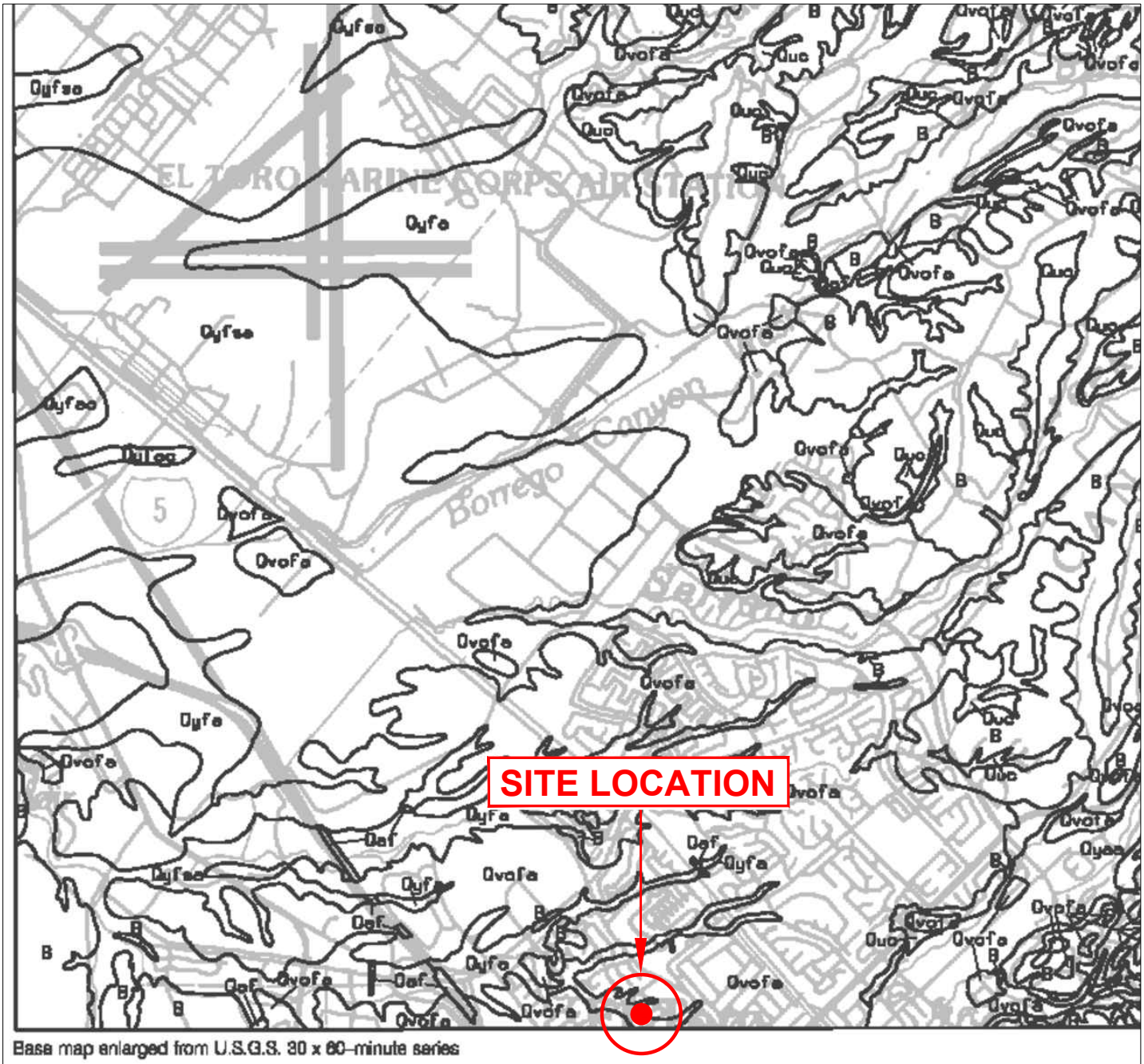

Base map enlarged from U.S.G.S. 30 x 60-minute series

Plate 1.1 Quaternary Geologic Map of the El Toro
See Geologic Conditions section in report for description
B = Pre-Quaternary bedrock.

ONE MILE

Scale

REGIONAL GEOLOGY MAP

Converse Consultants

VILLAGE POND PARK
23102 RIDGE ROUTE DRIVE
LAKE FOREST, CALIFORNIA
FOR: CITY OF LAKE FOREST

Project No. 15-32-162-01

Drawing No. 4

below any given site vary depending on numerous factors including seasonal rainfall, local irrigation, groundwater recharge, and groundwater pumping, among other factors. The regional groundwater table should be expected to be encountered during the planned construction, specifically for bridge pier foundations.

5.4 Subsurface Variations

Based on results of the subsurface exploration and our experience with the subject area, some variations in the continuity and nature of subsurface conditions within the project site are anticipated. Because of the uncertainties involved in the nature and depositional characteristics of the earth material at the site, care should be exercised in interpolating or extrapolating subsurface conditions between or beyond the boring locations. If, during construction, subsurface conditions different from those presented in this report are encountered, this office should be notified immediately so that recommendations can be modified, if necessary.

6.0 FAULTING AND SEISMIC HAZARDS

Geologic hazards are defined as geologically related conditions that may present a potential danger to life and property. Typical geologic hazards in Southern California include earthquake ground shaking, fault surface rupture, liquefaction and seismically induced settlement, lateral spreading, landslides, earthquake induced flooding, tsunamis and seiches, and volcanic eruption hazard.

Results of a site-specific evaluation for each type of possible seismic hazards are discussed in the following sections.

6.1 Seismic Characteristics of Nearby Faults

The subject site is situated within a seismically active region. As is the case for most areas of Southern California, ground-shaking resulting from earthquakes associated with nearby and more distant faults may occur at the project site. During the life of the project, seismic activity associated with active faults can be expected to generate moderate to strong ground shaking at the site.

<u>Newport Inglewood Fault</u>

The Newport Inglewood fault system is about 66 km long on shore and extends northwest from Huntington Beach through Long Beach to Culver City and the Cheviot Hills. The Newport Inglewood fault continues offshore to the southeast of Huntington Beach and makes landfall in La Jolla as the Rose Canyon fault. The Newport Inglewood fault is characterized by a series of uplifts and anticlines including Newport Mesa, Huntington Beach Mesa, Bolsa Chica Mesa, Alamitos Heights and Landing Hill, Signal Hill and Reservoir Hill, Dominguez Hills and Baldwin Hills.

Copyright 2016 Converse Consultants

Several earthquakes have occurred along the fault zone including the March 10, 1933 "Long Beach" earthquake of M_W 6.4, with its epicenter off Newport Beach, and smaller earthquakes at Inglewood on June 20, 1920 (M 4.9), Gardena on November 14, 1941 (M 5.4). These earthquakes show evidence of right-lateral strike slip focal mechanisms.

The Newport Inglewood fault is considered to be active and considered capable of producing a maximum moment magnitude (Mw) 7.1 earthquake. The slip rate is considered to be about 1.0 mm/year but may range up to 2 to 3 mm/year along isolated segments (Cao et al., 2003).

6.2 Surface Fault Rupture

The project site is not located within a currently designated State of California Earthquake Fault Zone (formerly Alquist-Priolo Special Studies Zones) for surface fault rupture and is not located within a City of Lake Forest geologic hazard zone for fault scarps. Based on a review of existing geologic information, no known active surface fault zone cross or project towards the site. The nearest known surface trace of an active fault is the Newport-Inglewood fault, located about 15.8 miles to the south. The potential for surface rupture resulting from the movement of the nearby major faults is considered remote. However, the site, as is all of Southern California, is located within a seismically active area. Accordingly, strong ground shaking due to seismic activity is anticipated at this site.

6.3 Liquefaction and Seismically-Induced Settlement

Liquefaction is the sudden decrease in the strength of cohesionless soils due to dynamic or cyclic shaking. Saturated soils behave temporarily as a viscous fluid (liquefaction) and, consequently, lose their capacity to support the structures founded on them. The potential for liquefaction decreases with increasing clay and gravel content, but increases as the ground acceleration and duration of shaking increase. Liquefaction potential has been found to be the greatest where the groundwater level and loose sands occur within 50 feet of the ground surface.

The site is not located within a potential liquefaction zone per the State of California Seismic Hazard Zones Map for the Lake Forest Quadrangle as shown in Drawing No. 6, *Seismic Hazard Zones Map*. However, due to the presence of shallow groundwater, liquefaction analyses were performed using *LiquefyPro,* Version 5.8n, 2012, by Civil Tech Software for the upper 50 feet below ground surface utilizing BH-2. The results of the liquefaction analysis and a summary of the methods used are presented in Appendix C, *Liquefaction/Seismic Settlement Analysis*.

The results of liquefaction analyses indicate the site soils are not susceptible to liquefaction. The estimated potential seismically induced settlement is anticipated to be less than 0.25 inches with potential differential settlement of approximately 0.15 inches

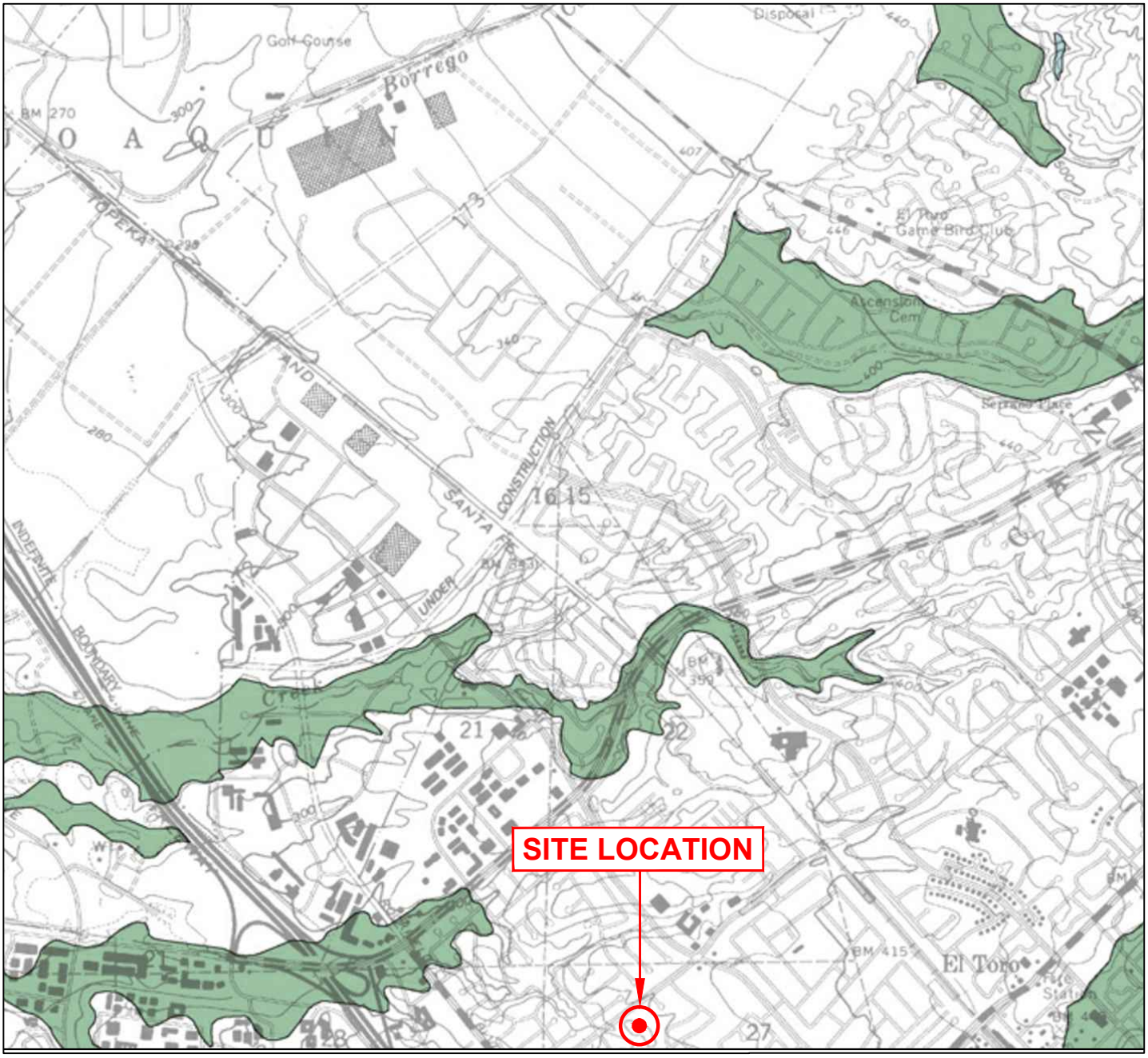

REFERENCE: STATE OF CALIFORNIA SEISMIC HAZARD ZONES, EL TORO QUADRANGLE 2001

MAP EXPLANATION

Zones of Required Investigation:

Liquefaction

Areas where historic occurrence of liquefaction, or local geological, geotechnical and groundwater conditions indicate a potential for permanent ground displacements such that mitigation as defined in Public Resources Code Section 2693(c) would be required.

N

0 2000 4000

APPROXIMATE SCALE IN FEET

SEISMIC HAZARD ZONES MAP

Converse Consultants

VILLAGE POND PARK
23102 RIDGE ROUTE DRIVE
LAKE FOREST, CALIFORNIA
FOR: CITY OF LAKE FOREST

Project No. 15-32-162-01

Drawing No. 6

over a span of 30 feet. The project structural engineer should consider the effect of these settlements on foundation design.

6.4 Lateral Spreading

Seismically induced lateral spreading involves primarily lateral movement of earth materials due to ground shaking. It differs from the slope failure in that complete ground failure involving large movement does not occur due to the relatively smaller gradient of the initial ground surface. Lateral spreading is demonstrated by near-vertical cracks with predominantly horizontal movement of the soil mass involved. The topography at the project site and in the immediate vicinity of the site is relatively flat. Under these circumstances, the potential for lateral spreading at the subject site is considered very low.

6.5 Seismically-Induced Slope Instability

Seismically induced landslides and other slope failures are common occurrences during or after earthquakes in areas of significant relief. The project site is not adjacent to any steep slopes. In the absence of significant ground slopes, the potential for seismically induced landslides to affect the proposed site is considered to be very low.

6.6 Earthquake-Induced Flooding

This is flooding caused by failure of dams or other water-retaining structures as a result of earthquakes. Review of the Flood Insurance Rate Map (FIRM), Panel 06059C0314J, effective date December 3, 2009, from the Map Service Center (MSC) viewer, indicates that portions of the site, immediately adjacent to the site is designated as Zone “A”, “No Base Flood Elevations Determined”, “Areas subject to inundation by the 1% annual chance flood” as shown in Drawing No. 7, *FEMA Flood Map*.

The potential of earthquake induced flooding of portions the subject site is considered to be low.

6.7 Tsunami and Seiches

A tsunami is a sea wave generated on the ocean floor due to earthquake fault movement or large-scale submarine landsliding. These waves travel in the deep ocean as low-amplitude compressional waves. As a tsunami wave approaches a coastline, the height of the wave increases because of the shallow bottom. If the tsunami is large enough, it can damage harbors and other areas near the coast. The site is located within an elevated terrace about 360 feet above MSL, and is not located within a tsunami inundation area as mapped by the State of California (2009). The possibility of a tsunami affecting the site area is considered to be remote. Similarly, damage to the site due to a seiche, a seismic wave set up in a restricted body of water, is considered low at the site because of the shallow depths of the man-made pond.

Copyright 2016 Converse Consultants

NFIP

NATIONAL FLOOD INSURANCE PROGRAM

PANEL 0314J

FIRM

FLOOD INSURANCE RATE MAP

ORANGE COUNTY, CALIFORNIA
AND INCORPORATED AREAS

PANEL 314 OF 539

(SEE MAP INDEX FOR FIRM PANEL LAYOUT)

CONTAINS:

COMMUNITY	NUMBER	PANEL	SUFFIX
IRVINE, CITY OF	060222	0314	J
LAGUNA HILLS, CITY OF	060760	0314	J
LAKE FOREST, CITY OF	060759	0314	J

Notice to User: The **Map Number** shown below should be used when placing map orders; the **Community Number** shown above should be used on insurance applications for the subject community.

MAP NUMBER
06059C0314J

MAP REVISED
DECEMBER 3, 2009

Federal Emergency Management Agency

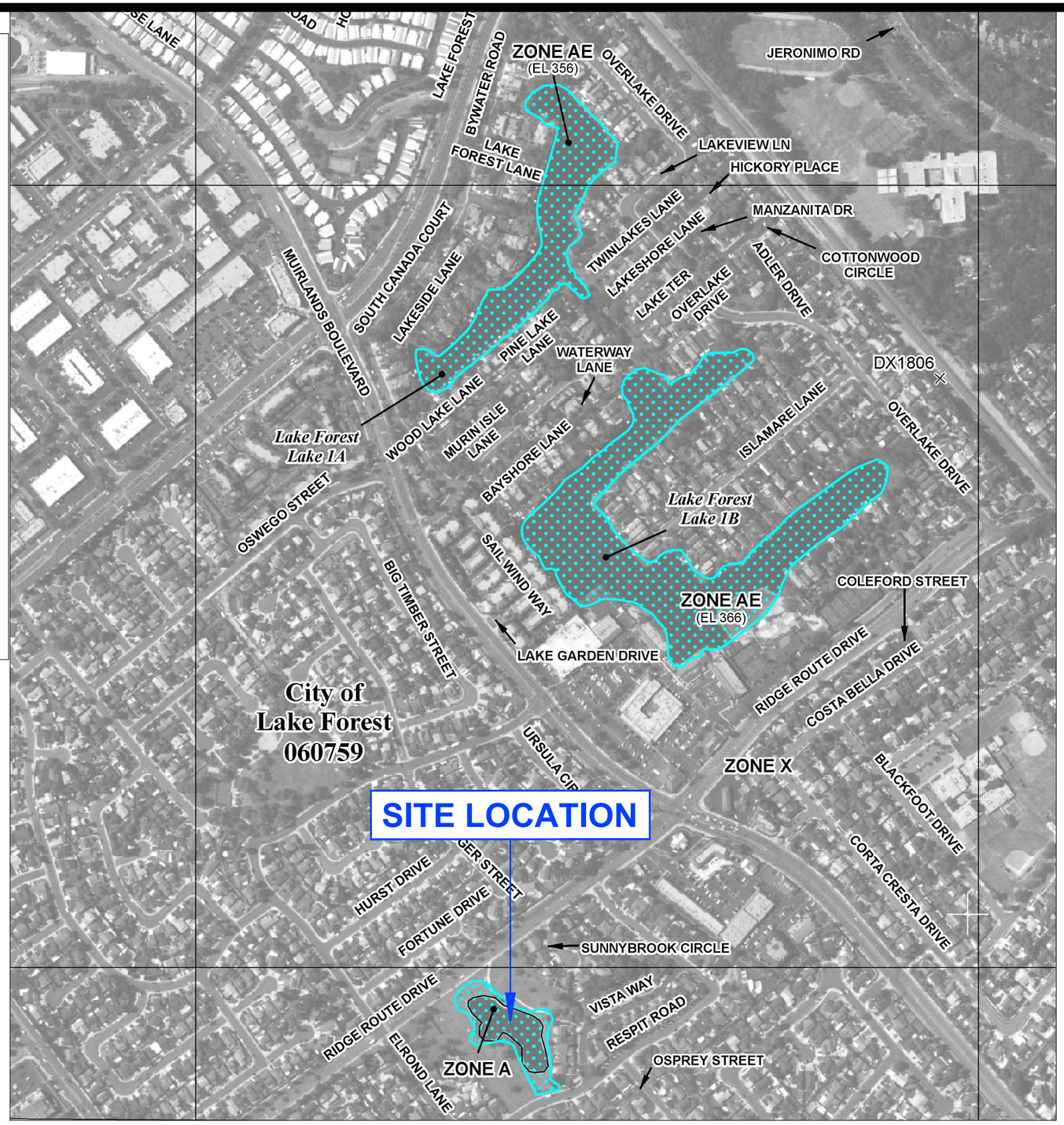

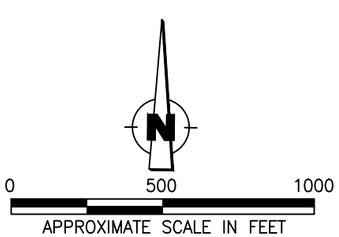

LEGEND

SPECIAL FLOOD HAZARD AREAS SUBJECT TO INUNDATION BY THE 1% ANNUAL CHANCE FLOOD

The 1% annual flood (100-year flood), also known as the base flood, is the flood that has a 1% chance of being equaled or exceeded in any given year. The Special Flood Hazard Area is the area subject to flooding by the 1% annual chance flood. Areas of Special Flood Hazard include Zones A, AE, AH, AO, AR, A99, V, and VE. The Base Flood Elevation is the water-surface elevation of the 1% annual chance flood.

ZONE A	No Base Flood Elevations determined.
ZONE AE	Base Flood Elevations determined.
ZONE AH	Flood depths of 1 to 3 feet (usually areas of ponding); Base Flood Elevations determined.
ZONE AO	Flood depths of 1 to 3 feet (usually sheet flow on sloping terrain); average depths determined. For areas of alluvial fan flooding, velocities also determined.
ZONE AR	Special Flood Hazard Area formerly protected from the 1% annual chance flood by a flood control system that was subsequently decertified. Zone AR indicates that the former flood control system is being restored to provide protection from the 1% annual chance or greater flood.
ZONE A99	Area to be protected from 1% annual chance flood by a Federal flood protection system under construction; no Base Flood Elevations determined.
ZONE V	Coastal flood zone with velocity hazard (wave action); no Base Flood Elevations determined.
ZONE VE	Coastal flood zone with velocity hazard (wave action); Base Flood Elevations determined.

FLOODWAY AREAS IN ZONE AE

The floodway is the channel of a stream plus any adjacent floodplain areas that must be kept free of encroachment so that the 1% annual chance flood can be carried without substantial increases in flood heights.

OTHER FLOOD AREAS

ZONE X	Areas of 0.2% annual chance flood; areas of 1% annual chance flood with average depths of less than 1 foot or with drainage areas less than 1 square mile; and areas protected by levees from 1% annual chance flood.

OTHER AREAS

ZONE X	Areas determined to be outside the 0.2% annual chance floodplain.
ZONE D	Areas in which flood hazards are undetermined, but possible.

COASTAL BARRIER RESOURCES SYSTEM (CBRS) AREAS

OTHERWISE PROTECTED AREAS (OPAs)

CBRS areas and OPAs are normally located within or adjacent to Special Flood Hazard Areas.

1% annual chance floodplain boundary

0.2% annual chance floodplain boundary

Floodway boundary

Zone D boundary

CBRS and OPA boundary

Boundary dividing Special Flood Hazard Area Zones and boundary dividing Special Flood Hazard Areas of different Base Flood Elevations, flood depths or flood velocities.

513	Base Flood Elevation line and value; elevation in feet*
(EL 987)	Base Flood Elevation value where uniform within zone; elevation in feet*

* Referenced to the North American Vertical Datum of 1988

A — A	Cross section line
23 - - - - - 23	Transect line
87°07'45", 32°22'30"	Geographic coordinates referenced to the North American Datum of 1983 (NAD 83), Western Hemisphere
2476000mN	1000-meter Universal Transverse Mercator grid values, zone NAD 1983 UTM Zone 11N
600000 FT	5000-foot grid ticks: California State Plane coordinate system, zone VI (FIPSZONE 0406), Lambert Conformal Conic projection
DX5510 ×	Bench mark (see explanation in Notes to Users section of this FIRM panel)
●M1.5	River Mile

MAP REPOSITORY
Refer to listing of Map Repositories on Map Index

EFFECTIVE DATE OF COUNTYWIDE
FLOOD INSURANCE RATE MAP
September 15, 1989

EFFECTIVE DATE(S) OF REVISION(S) TO THIS PANEL
February 5, 1992 - November 3, 1993 - January 3, 1997 - February 18, 2004 - December 3, 2009 ; for description of revisions, see Notice to Users page in the Flood Insurance Study report.

FEMA FLOOD MAP

Converse Consultants

VILLAGE POND PARK
23102 RIDGE ROUTE DRIVE
LAKE FOREST, CALIFORNIA
FOR: CITY OF LAKE FOREST

Project No.	Drawing No.
15-32-162-01	7

I:\ACADDRAWINGS\15\32\162\GEOTECHREPORT\15-32-162-01_FEMA-FLOOD.DWG

7.0 SEISMIC ANALYSIS

Seismic parameters based on the 2013 California Building Code are calculated using the United States Geological Survey *U.S. Seismic Design Maps* website application and the site coordinates (33.6260 degrees North Latitude, 117.7072 degrees West Longitude). The seismic parameters are presented below.

Table No. 1, CBC Seismic Design Parameters

Seismic Parameters	2013 CBC
Site Class	D
Mapped Short period (0.2-sec) Spectral Response Acceleration, S_S	1.472 g
Mapped 1-second Spectral Response Acceleration, S_1	0.548 g
Site Coefficient (from Table 1613.5.3(1)), F_a	1.0
Site Coefficient (from Table 1613.5.3(2)), F_v	1.5
MCE 0.2-sec period Spectral Response Acceleration, S_{MS}	1.472 g
MCE 1-second period Spectral Response Acceleration, S_{M1}	0.822 g
Design Spectral Response Acceleration for short period, S_{DS}	0.982 g
Design Spectral Response Acceleration for 1-second period, S_{D1}	0.548 g
Seismic Design Category	D

8.0 GEOTECHNICAL EVALUATIONS AND CONCLUSIONS

Based on the results of our background review, subsurface exploration, laboratory testing, geotechnical analyses, and understanding of the planned site development, it is our opinion that the proposed project is feasible from a geotechnical standpoint, provided the following conclusions and recommendations are incorporated into the project plans, specifications, and are followed during site construction. The following geotechnical findings should be considered for the planned projects:

- Undocumented fill consisting of clayey sand and silty sand were encountered up to five (5) feet in depth at the sites. Deeper artificial fill may exist at the site. The fills are generally moderately dense. Undocumented fill should be excavated and recompacted. The alluvial sediments consist predominately of layered sandy clays, sandy silts, clayey sands and silty sands up to a depth of approximately 51.5 feet below ground surface.

- There are no active faults projecting toward or extending across the proposed site. The site is not located within a currently designated State of California Earthquake Fault Zone. Moderate to strong ground shaking from earthquakes associated with the Newport-Inglewood Fault and other nearby and distant faults may occur during the lifetime of the project.

Copyright 2016 Converse Consultants

- During our exploration, groundwater was encountered at 30 feet and 42 feet below ground surface at borings BH-1 and BH-2, respectively. The regional groundwater table should be expected to be encountered during the planned construction, specifically for bridge pier foundations.

- The site is not located within a potential liquefaction zone per the State of California Seismic Hazard Zones Map for the Lake Forest Quadrangle. The results of liquefaction analyses indicate the site soils are not susceptible to liquefaction. The estimated potential seismically induced settlement is anticipated to be less than 0.25 inches with potential differential settlement of approximately 0.15 inches over a distance of 30 feet.

- The surficial site soils at the site exhibit a “Low” expansive potential. Mitigation for expansive soil may be considered during grading operations.

- Site soils have “moderate” concentrations of water soluble sulfates. In general, the pH value, chloride content, and sulfate content of the site soils are in the non-corrosive range. However, the saturated resistivity of the site soils is in the corrosive range to ferrous metals.

- The earth materials at the site should be excavatable with conventional heavy-duty earth moving equipment. Earthwork should be performed with suitable equipment for gravelly materials.

- Shallow spread footings and pier footings are considered suitable for structural support provided the recommendations in this report are incorporated into the project plans, specifications, and are followed during site construction.

9.0 EARTHWORK RECOMMENDATIONS

9.1 General Evaluation and Summary

Based on our field exploration, laboratory testing, and analyses of subsurface conditions at the site, remedial grading is required to prepare the site for support of the proposed structures. The subject site has slight slopes. It is anticipated that the site preparation will include both cut and fill. To reduce differential settlement, variations in the soil type, degree of compaction, and thickness of the compacted fill, the thickness of compacted fill placed underneath the footings should be kept uniform.

Site grading recommendations provided below are based on our experience with similar projects in the area and our evaluation of this investigation. It is our understanding that site preparation will require removal of existing structures with their foundations and other existing underground manmade structures and utilities.

Copyright 2016 Converse Consultants

The site soils can be excavated utilizing conventional heavy-duty earth-moving equipment. The excavated site soils, free of vegetation, shrub and debris, may be placed as compacted fill in structural areas after proper processing. Rocks larger than three (3) inches in the largest dimension should not be placed as fill. Rocks larger than one (1) inch should not be placed within the upper 12 inches of subgrade soils.

On-site clayey soils and with an expansion index exceeding 20 should not be re-used for compaction within 2 feet below the proposed foundations or for retaining wall backfill. Soils containing organic materials should not be used as structural fill. The extent of removal should be determined by the geotechnical representative based on soil observation during grading

9.2 Over-Excavation/Removal

Prior to the start of construction, all loose soil, undocumented fill and soil disturbed during demolition should be removed to firm acceptable native material or compacted fill.

Due to the undocumented fill encountered at the site, for structures with shallow footings we recommend be over-excavated to a depth of 3 feet below bottom of footings or depth of undocumented fill, whichever is deeper. Over-excavation should extend at least five (5) feet laterally beyond the limits of perimeter footings where feasible. The on-site soil has a “medium” expansive potential and is not considered suitable for re-use as regular compacted fill without mitigation.

Over-excavation for retaining walls, if any, should be two (2) feet below bottom of footings and should extend three (3) feet laterally beyond the retaining wall area. The upper 24 inches of site soils should be removed in areas of sidewalks and hardscape. If loose, disturbed, or otherwise unsuitable materials are encountered at the bottom of excavation, deeper removal will be required until firm native soils are encountered. The over-excavation should extend two (2) feet laterally beyond the sidewalk and hardscape areas.

If loose, disturbed, or otherwise unsuitable materials are encountered at the bottom of excavation, deeper removal will be required until firm native soils are encountered. The actual depth of removal should be based on recommendations and observation made during grading. Therefore, some variations in the depth and lateral extent of over-excavation recommended in this report should be anticipated.

Excavation activities should not disturb adjacent utilities or undermine any adjacent buildings and structures to remain. Remedial grading should not extend within a projected 1:1 (horizontal to vertical) plane projected down from the outer edge of adjacent off-site improvements. Existing utilities should be removed and adequately capped at the project boundary line, or salvaged/rerouted as designed.

Copyright 2016 Converse Consultants

9.3 Subgrade Preparation

All exposed subgrade soil surface should be observed by a Converse representative prior to placement of fill, base materials or slabs. The exposed subgrade should be scarified at least 6 inches, moisture conditioned as needed to 3 percent above optimum moisture content, and compacted to 90 percent relative compaction.

If loose, yielding soil conditions are encountered at the excavation bottom, the following options can be considered:

a. Over-excavate until reach firm bottom.
b. Over-excavate additional 18 inches deep below subgrade, and then place at least 18-inch-thick compacted base material (CAB or equivalent) to bridge the soft bottom. Base should be compacted to 95% relative compaction.
c. Over-excavate additional 18 inches deep below subgrade, and then place a layer of geogrid (i.e. Mirafi HP570, X600 or equivalent), place 18-inch-thick compacted base material (CAB or equivalent) to bridge the soft bottom. Base should be compacted to 95% relative compaction. An additional layer of geogrid may be needed on top of base depending on the actual site conditions.

9.4 Structural Fill

Following observation of the excavation bottom, subgrade soil surfaces should be scarified to a depth of at least six (6) inches and recompacted to at least 90 percent of the laboratory maximum dry density as determined by ASTM Standard D2922 test method prior to receive new fills. Excavated site soils, free of deleterious materials and rock particles larger than three (3) inches in the largest dimension, should be suitable for placement as compacted fill. Imported soils used for compaction should be predominantly granular and meet the following criteria:

- Expansion Index less than 30 in general
- Free of all deleterious materials
- Contain no particles larger than 3 inches in the largest dimension
- Contain less than 30 percent by weight retained on ¾-inch sieve

All import soils should be tested and approved by the Geotechnical Consultant prior to delivery to the site. Based upon the Geotechnical Consultant's approval, imported soils with Expansion Index between 30 and 50 may be placed within landscape areas without any major structures.

Prior to compaction, fill materials should be thoroughly mixed and moisture conditioned to three (3) percent above the optimum moisture content. Fill soils shall be evenly spread in maximum 8-inch lifts, watered or dried as necessary, mixed and compacted to at least the density specified below. The fill shall be placed and compacted on a horizontal plane,

Copyright 2016 Converse Consultants

unless otherwise approved by the Geotechnical Engineer. All fill, if not specified otherwise elsewhere in this report, should be compacted to at least 90 percent of the laboratory dry density in accordance with the ASTM Standard D2922 test method.

All structural fill should be placed on competent, scarified and compacted materials as determined by Geotechnical Consultant and in accordance with the specifications presented in this section and in Appendix C, Earthwork Specifications.

9.5 Excavatability

Based on our field exploration, the earth materials at the site can be excavatable with conventional heavy-duty earth moving, drilling, and trenching equipment. The onsite materials may contain demolition debris and gravel and/or cobbles. Earthwork should be performed with suitable equipment and methods for removal of debris from the engineered fill. Existing utilities should be accurately located and either protected or removed as required.

9.6 Expansive Soil

The on-site shallow soils at the subject site have a “Low” expansion potential. Mitigation for expansive soils may be necessary. The on-site soil materials will be mixed during the grading and the expansion potential might change. Therefore, the expansion potential of site soils should be verified after the grading as slabs, foundations and pavement placed directly on expansive subgrade soil will likely crack over time.

To mitigate the expansive soils, on-site clayey soils with an Expansion Index higher than 50 should not be re-used for compaction within 2 feet below the proposed foundations or for retaining wall backfill. The extent of removal should be determined by the geotechnical representative based on soil observation during grading.

There are several alternative mitigation measures that can be utilized to improve expansive soils at the site. Some mitigation measures include:

- Removing about two (2) feet of the underlying soils throughout areas beneath structures, and replacing with imported non-expansive sandy soil materials.
- Reinforce footing and place thicker concrete slab with moisture barrier
- Lime treat the upper two (2) feet of the subgrade soils

The recommendations contained in this report are based upon the anticipated on expansion soil conditions. Any proposed import fill should have an expansion index less than 20, and should be evaluated and approved by Converse prior to import to the site.

Copyright 2016 Converse Consultants

9.7 Pipeline Backfill Recommendations

Any soft and/or unsuitable material encountered at the pipe invert should be removed and replaced with an adequate bedding material. The pipe subgrade should be level, firm, uniform, free of loose materials and properly graded to provide uniform bearing and support to the entire section of the pipe placed on bedding material. Protruding oversize particles larger than two (2) inches in the largest dimension, if any, should be removed from the trench bottom and replaced with compacted materials. During the digging of depressions for proper sealing of the pipe joints, the pipe should rest on a prepared bottom for as near its full length as is practicable. The bedding zone is defined as that portion of the pipe trench from four inches below the pipe invert to one foot above the top of pipe, in accordance with Section 306-1.2.1 of the Latest Edition of the *Standard Specifications for Public Works Construction* (SSPWC).

9.8 Trench Zone Backfill

The following specifications are recommended to provide a basis for quality control during the placement of trench backfill.

Trench excavations to receive backfill shall be free of trash, debris or other unsatisfactory materials at the time of backfill placement. Excavated on-site soils free of oversize particles, defined as larger than one (1) inch in maximum dimension in the upper 12 inches of subgrade soils and larger than three (3) inches in the largest dimension in the trench backfill below, and deleterious matter after proper processing may be used to backfill the trench zone. Imported trench backfill, if used, should be approved by the project soils consultant prior to delivery at the site. No more than 30 percent of the backfill volume should be larger than ¾ inch in the largest dimension.

Trench backfill shall be compacted to 90 percent of the laboratory maximum dry density as per ASTM Standard D2922 test method. At least the upper twelve (12) inches of trench underlying pavements should be compacted to at least 95 percent of the laboratory maximum dry density.

Trench backfill shall be compacted by mechanical methods, such as sheepsfoot, vibrating or pneumatic rollers, or mechanical tampers, to achieve the density specified herein. The backfill materials shall be brought to within two (2) percent of optimum moisture content and then placed in horizontal layers if the expansion index is less than or equal to 30. Should the expansion index be greater than 30, backfill materials shall be brought to approximately 3 percent above optimum moisture content. The thickness of uncompacted layers should not exceed eight (8) inches. Each layer shall be evenly spread, moistened or dried as necessary, and then tamped or rolled until the specified density has been achieved.

The contractor shall select the equipment and processes to be used to achieve the specified density without damage to adjacent ground and completed work. The field

density of the compacted soil shall be measured by the ASTM Standard D1556 or ASTM Standard D2922 test methods or equivalent. Observation and field tests should be performed by Converse during construction to confirm that the required degree of compaction has been obtained. Where compaction is less than that specified, additional compactive effort shall be made with adjustment of the moisture content as necessary, until the specified compaction is obtained. It should be the responsibility of the contractor to maintain safe conditions during cut and/or fill operations. Trench backfill shall not be placed, spread or rolled during unfavorable weather conditions. When the work is interrupted by heavy rain, fill operations shall not be resumed until field tests by the project's geotechnical consultant indicate that the moisture content and density of the fill are as previously specified.

Imported soils, if any, used as compacted trench backfill should be predominantly granular and meet the following criteria:

- Expansion Index less than 20
- Free of all deleterious materials
- Contain no particles larger than 3 inches in the largest dimension
- Contain less than 30 percent by weight retained on ¾-inch sieve
- Contain at least 15 percent fines (passing #200 sieve)
- Have a Plasticity Index of 10 or less

Any import fill should be tested and approved by the geotechnical representative prior to delivery to the site.

9.9 Shrinkage and Subsidence

Soil shrinkage and/or bulking as a result of remedial grading depends on several factors including the depth of over-excavation, and the grading method and equipment utilized, and average relative compaction. For preliminary estimation, bulking and shrinkage factors for various units of earth material at the site may be taken as presented below:

- The approximate shrinkage factor for the undocumented fill soils is estimated to range from ten (10) to fifteen (15) percent.
- The approximate shrinkage factor for the native alluvial soils is estimated to range from five (5) to ten (10) percent.
- For estimation purposes, ground subsidence may be taken as 0.1 feet as a result of remedial grading.

Although these values are only approximate, they represent our best estimates of the factors to be used to calculate lost volume that may occur during grading. If more accurate shrinkage and subsidence factors are needed, it is recommended that field-testing using the actual equipment and grading techniques be conducted.

Copyright 2016 Converse Consultants

The various design recommendations provided in this section are based on the assumptions that in preparing the site, the earthwork and site grading recommendations provided in this report will be followed. The proposed site improvements may be supported by shallow footings and pier foundations.

10.0 DESIGN RECOMMENDATIONS

The proposed amenities and lightly loaded structures (i.e. entry overhead structure and retaining walls) can be supported on conventional shallow foundations founded on compacted fill. Pier the pedestrian bridge can be supported on pier foundations (caissons).

10.1 Shallow Foundations

10.1.1 Vertical Capacity

The proposed entry overhead structure and retaining walls can be supported by conventional shallow footings. We recommend continuous and square footings be founded at least 18 inches below lowest adjacent final grade entirely into compacted fill or into native soil. A minimum footing width of 24 inches is recommended for square footings and 18 inches for continuous footings. The allowable bearing value for footings with above minimum sizes founded on compacted fill or competent native soils may be designed for a net bearing pressure of 2,500 pounds per square foot (psf) for dead-plus-live-loads. The net allowable bearing pressure can be increase by 300 psf for each additional foot of excavation depth and by 250 psf for each additional foot of excavation width up to a maximum value of 4,000 psf.

The net allowable bearing values indicated above are for the dead loads and frequently applied live loads and are obtained by applying a factor of safety of 3.0 to the net ultimate bearing capacity.

10.1.2 Lateral Capacity

Resistance to lateral loads can be provided by friction acting at the base of the foundation and by passive earth pressure. A coefficient of friction of 0.30 may be assumed with normal dead load forces. An allowable passive earth pressure of 250 psf per foot of depth up to a maximum of 2,500 psf may be used for footings poured against properly compacted fill. The values of coefficient of friction and allowable passive earth pressure include a factor of safety of 1.5.

10.1.3 Settlement

The static settlement of structures supported on continuous and/or spread footings founded on compacted fill and native soil will depend on the actual footing dimensions

and the imposed vertical loads. Most of the footing settlement at the project site is expected to occur immediately after the application of the load. Based on the maximum allowable net bearing pressures presented above, static settlement is anticipated to be on the order of 1.0 inch. Differential settlement is expected to be up to one-half of the total settlement over a 30-foot span.

10.1.4 Dynamic Increases

Bearing values indicated above are for total dead load and frequently applied live loads. The above vertical bearing may be increased by 33% for short durations of loading which will include the effect of wind or seismic forces. The allowable passive pressure may be increased by 33% for lateral loading due to wind or seismic forces.

10.2 Pier Foundations

The planned pedestrian bridge can be supported on piers (caissons) provided the following recommendations incorporated into design and construction. The piers can be connected to a grade beam system determined by the project structural engineer to control the deflections of structure under the design tolerance.

10.2.1 Vertical Capacity

Piers should be at least 24-inch in diameter extending at least 8 feet below adjacent final grade on compacted fill or native alluvial soils. Piers can be designed for an allowable skin friction of 250 psf against the perimeter of pier for a minimum embedment of 10 feet below the adjacent grade or depth of fill, whichever is greater. Furthermore, sonotubes should be used for the depth of the installed piers equal to that of the depth of fill. The soil skin friction associated with the depth of installed sonotubes should be neglected in pier capacity calculations.

If end bearing capacity is to be considered for design, the bottom of pier should be cleaned out with appropriate equipment. The allowable end bearing capacity can be designed for 3,500 psf. However, the diameter of pier may be increased and temporary casing may be required to facilitate cleanout.

10.2.2 Lateral Capacity

Resistance to lateral loads can be provided by friction acting at the base of the foundation and by passive earth pressure. A coefficient of friction of 0.30 may be assumed with normal dead load forces. An allowable passive earth pressure of 250 psf per foot of depth up to a maximum of 2,500 psf may be used for foundations poured against compacted fill. The values of coefficient of friction and allowable passive earth pressure include a factor of safety of 1.5. For ground surface restrained by concrete slab, the passive resistance may be calculated from the ground surface. For unrestrained ground condition,

Copyright 2016 Converse Consultants

the passive resistance of the upper one (1) feet earth material should be neglected in design.

10.2.3 Settlement

The static settlement of structures supported on piers founded on native alluvium will depend on the actual footing dimensions and the imposed vertical loads. Most of the footing settlement at the project site is expected to occur immediately after the application of the load. Based on the maximum allowable net bearing pressures presented above, static settlement is anticipated to be less than 0.5 inch.

10.2.4 Dynamic Increases

Bearing values indicated above are for total dead load and frequently applied live loads. The above vertical bearing may be increased by 33% for short durations of loading which will include the effect of wind or seismic forces. The allowable passive pressure may be increased by 33% for lateral loading due to wind or seismic forces.

10.3 Modulus of Subgrade Reaction

For the subject project, design of the structures supported on compacted fill subgrade prepared in accordance with the recommendations provided in this report may be based on a soil modulus of subgrade reaction of (k_s) of 125 pounds per square inch per inch.

10.4 Slabs-on-grade

Slabs-on-grade should have a minimum thickness of four inches nominal for support of normal ground-floor live loads. Minimum reinforcement for slabs-on-grade should be No. 4 reinforcing bars, spaced at 18 inches on-center each way. The thickness and reinforcement of more heavily loaded slabs will be dependent upon the anticipated loads and should be designed by a structural engineer. A static modulus of subgrade reaction equal to 100 pounds per square inch per inch may be used in structural design of concrete slabs-on-grade.

It is critical that the exposed subgrade soils should not be allowed to desiccate prior to the slab pour. Care should be taken during concrete placement to avoid slab curling. Slabs should be designed and constructed as promulgated by the ACI and Portland Cement Association (PCA). Prior to the slab pour, all utility trenches should be properly backfilled and compacted.

In areas where a moisture-sensitive floor covering (such as vinyl tile or carpet) is used, a 10-mil-thick moisture retarder/barrier between the bottom of slab and subgrade that meets the performance criteria of ASTM E 1745 Class A material. Retarder/barrier sheets should be overlapped a minimum of six inches, and should be taped or otherwise sealed per the product specifications.

Copyright 2016 Converse Consultants

10.5 Lateral Earth Pressure

The following provisional design values may be used for the planned retaining walls that are less than 6 feet high. As we understand there may be some subsurface utility vaults.

The earth pressure behind any buried wall depends primarily on the allowable wall movement, type of soil behind the wall, backfill slopes, wall inclination, surcharges, and any hydrostatic pressure. The following earth pressures are recommended for vertical walls with no hydrostatic pressure.

Table No. 2, Lateral Earth Pressures for Retaining Wall Design

Backfill Slope (H:V)	Cantilever Wall Equivalent Fluid Pressure (pcf)	Restrained Wall (psf)
Level	40 (triangular pressure distribution)	55 (triangular pressure distribution)

The recommended lateral pressures assume that the walls are fully back-drained to prevent build-up of hydrostatic pressure. Adequate drainage could be provided by means of permeable drainage materials wrapped in filter fabric installed behind the walls. The drainage system should consist of perforated pipe surrounded by a minimum one (1) square feet per lineal feet of free draining, uniformly graded, ¾ -inch washed, crushed aggregate, and wrapped in filter fabric such as Mirafi 140N or equivalent. The filter fabric should overlap approximately 12 inches or more at the joints. The subdrain pipe should consist of perforated, four-inch diameter, rigid ABS (SDR-35) or PVC A-2000, or equivalent, with perforations placed down. Alternatively, a prefabricated drainage composite system such as the Miradrain G100N or equivalent can be used. The subdrain should be connected to solid pipe outlets, with a maximum outlet spacing of 100 feet. Waterproofing membranes should be added to the subterranean wall levels for moisture sensitive areas to mitigate moisture migration through the walls.

In addition, walls with inclined backfill should be designed for an additional equivalent fluid pressure of one (1) pound per cubic foot for every two (2) degrees of slope inclination. Walls subjected to surcharge loads located within a distance equal to the height of the wall should be designed for an additional uniform lateral pressure equal to one-third or one-half the anticipated surcharge load for unrestrained or restrained walls, respectively. These values are applicable for backfill placed between the wall stem and an imaginary plane rising 45 degrees from below the edge (heel) of the wall footings.

Retaining walls taller than 6 feet should be designed to resist additional earth pressure caused by seismic ground shaking based on Section 1615A.1.6 of CBC 2010. A seismic earth pressure of 20H (psf), based on an inverted triangular distribution, can be used for design of wall.

Copyright 2016 Converse Consultants

10.6 Soil Corrosivity Evaluation

Based on our review of soil corrosivity test results (see Appendix B), site soils have "moderate" concentrations of water soluble sulfates. In general, the pH value, chloride content, and sulfate content of the site soils are in the non-corrosive range. However, the saturated resistivity of the site soils is in the corrosive range to ferrous metals in accordance with the Caltrans Corrosive Guidelines (2012). Mitigation measures to protect concrete in contact with the soils may be anticipated.

A corrosion engineer may be consulted for appropriate mitigation procedures and construction design, if needed. General considerations for corrosion mitigation measures may include the following:

- Steel and wire concrete reinforcement should have at least three inches of concrete cover where cast against soil, unformed.
- Below-grade ferrous metals should be given a high-quality protective coating, such as 18-mil plastic tape, extruded polyethylene, coal-tar enamel, or Portland cement mortar.
- Below-grade metals should be electrically insulated (isolated) from above-grade metals by means of dielectric fittings in ferrous utilities and/or exposed metal structures breaking grade.

10.7 Site Drainage

Adequate positive drainage should be provided away from the structures to prevent ponding and to reduce percolation of water into structural backfill. We recommend that the landscape area immediately adjacent to the foundation shall be designed sloped away from the building with a minimum 5% slope gradient for at least 10 feet measured perpendicular to the face of the wall. Impervious surfaces within 10 feet of the building foundation shall be sloped a minimum of 2 percent away from the building per 2010 CBC.

11.0 CONSTRUCTION CONSIDERATIONS

11.1 General

Site soils should be excavatable using conventional heavy-duty excavating equipment. Temporary sloped excavation is feasible if performed in accordance with the slope ratios provided in Section 11.2, *Temporary Excavations*. Existing utilities should be accurately located and either protected or removed as required.

Copyright 2016 Converse Consultants

11.2 Temporary Excavations

Based on the sandy materials encountered in the exploratory borings, sloped temporary excavations (if necessary) may be constructed according to the slope ratios presented in the following table:

Table No. 3, Slope Ratios for Temporary Excavation

Maximum Depth of Cut (feet)	Maximum Slope Ratio* (horizontal: vertical)
0 – 5	Vertical
5 – 10	1 : 1
10 - 15	1.5 : 1

*Slope ratio assumed to be uniform from top to toe of slope.

Any loose utility trench backfill or other fill encountered in excavations will be less stable than the native soils. Temporary cuts encountering loose fill or loose dry sand may have to be constructed at a flatter gradient than presented in the above table.

Surfaces exposed in slope excavations should be kept moist but not saturated to minimize raveling and sloughing during construction. Adequate provisions should be made to protect the slopes from erosion during periods of rainfall. Surcharge loads, including construction, should not be placed within five (5) feet of the unsupported trench edge. The above maximum slopes are based on a maximum height of six (6) feet of stockpiled soils placed at least five (5) feet from the trench edge.

All applicable requirements of the California Construction and General Industry Safety Orders, the Occupational Safety and Health Act of 1987 and current amendments, and the Construction Safety Act should be met. The soils exposed in cuts should be observed during excavation by the project's geotechnical consultant. If potentially unstable soil conditions are encountered, modifications of slope ratios for temporary cuts may be required.

11.3 Shoring Design

Although not anticipated, temporary shoring may be required for the excavation due to space limitations and/or adjacent surcharge loading. Temporary shoring may consist of the use of a trench box (where feasible), conventional soldier piles and lagging. Shoring should ultimately be designed by a qualified structural engineer considering the below recommendations in their final design and others which are applicable.

Cantilevered shoring systems may include soldier piles with lagging to maintain temporary support of vertical wall excavations. Shoring design must consider the support of adjacent underground utilities and/or structures, and should consider the effects of shoring deflection on supported improvements. Due to sandy nature of some of the on-

Copyright 2016 Converse Consultants

site soils, caving during the drilling of soldier-pile borings should be anticipated. A soldier pile system will require continuous lagging to control caving and sloughing in the excavation between soldier piles.

Temporary cantilevered shoring should be designed to resist a lateral earth pressure equivalent to a fluid density of 25 pounds per cubic foot (pcf) for non-surcharged condition. This pressure is valid only for shoring retaining level ground. This equivalent fluid pressure is valid only for shoring supporting level ground.

In addition to the lateral earth pressure, surcharge pressures due to miscellaneous loads, such as soil stockpiles, vehicular traffic or construction equipment located adjacent to the shoring, should be included in the design of the shoring. Surcharge pressures from the existing structures should be added to the above earth pressures for surcharges within a horizontal distance less than or equal to the wall height. Surcharge coefficients of 40% of any uniform vertical surcharge should be added as a horizontal earth pressure for shoring design. All shoring should be designed and installed in accordance with state and federal safety regulations.

The minimum embedment depth for piles is eight (8) feet from the lowest adjacent grade into firm alluvium, below the bottom of the excavation. Vertical skin friction against soldier piles for may be taken as 250 psf. Fixity may be assumed at two (2) feet below the excavation into firm native alluvium. For the design of soldier piles spaced at least 3.0 diameters on-center, the passive resistance of the soils adjacent to the piles may be assumed to be 500 psf per foot of embedment depth. Soldier pile members placed in drilled holes should be properly backfilled with a sand/cement slurry or lean concrete in order to develop the required passive resistance.

To limit local sloughing, caving soils can be supported by continuous lagging or guniting. The lagging between the soldier piles may consist of pressure-treated wood members or solid steel sheets. In our opinion, steel sheeting is expected to be more expedient than wood lagging to install. Although soldier piles and any bracing used should be designed for the full-anticipated earth pressures and surcharge pressures, the pressures on the lagging are less because of the effect of arching between the soldier piles. Accordingly, the lagging between the piles may be designed for a nominal pressure of up to a maximum of 350 psf. All lumber to be left in the ground should be treated in accordance with Section 204-2 of the "Standard Specifications for Public Works Construction".

11.4 Geotechnical Services During Construction

This report has been prepared to aid in the site preparation and site grading plans and specifications, and to assist the architect, civil and structural engineers in the design of the proposed structures. It is recommended that this office be provided an opportunity to review final design drawings and specifications to verify that the recommendations of this report have been properly implemented.

Copyright 2016 Converse Consultants

Recommendations presented herein are based upon the assumption that adequate earthwork monitoring will be provided by Converse. Excavation bottoms should be observed by a Converse representative prior to the placement of compacted fill. Structural fill and backfill should be placed and compacted during continuous observation and testing by this office. Footing excavations should be observed by Converse prior to placement of steel and concrete so that footings are founded on satisfactory materials and excavations are free of loose and disturbed materials.

During construction, the geotechnical engineer and/or their authorized representatives should be present at the site to provide a source of advice to the client regarding the geotechnical aspects of the project and to observe and test the earthwork performed. Their presence should not be construed as an acceptance of responsibility for the performance of the completed work, since it is the sole responsibility of the contractor performing the work to ensure that it complies with all applicable plans, specifications, ordinances, etc.

This firm does not practice or consult in the field of safety engineering. We do not direct the contractor's operations, and cannot be responsible for other than our own personnel on the site; therefore, the safety of others is the responsibility of the contractor. The contractor should notify the owner if he considers any recommended actions presented herein to be unsafe.

12.0 CLOSURE

The findings and recommendations of this report were prepared in accordance with generally accepted professional engineering and engineering geologic principles and practice. We make no other warranty, either expressed or implied. Our conclusions and recommendations are based on the results of the field and laboratory studies, combined with an interpolation and extrapolation of soil conditions between and beyond boring locations. If conditions encountered during construction appear to be different from those shown by the borings, this office should be notified.

Design recommendations given in this report are based on the assumption that the earthwork and site grading recommendations contained in this report are implemented. Additional consultation may be prudent to interpret Converse's findings for contractors, or to possibly refine these recommendations based upon the review of the final site grading and actual site conditions encountered during construction. If the scope of the project changes, if project completion is to be delayed, or if the report is to be used for another purpose, this office should be consulted.

This report was prepared for the City of Lake Forest for the subject project described herein. We are not responsible for technical interpretations made by others of our exploratory information. Specific questions or interpretations concerning our findings and conclusions may require a written clarification to avoid future misunderstandings.

Copyright 2016 Converse Consultants

13.0 REFERENCES

AMERICAN SOCIETY OF CIVIL ENGINEERS, *ASCE/SEI 7-10, Minimum Design Loads for Structures and Other Structures*, copyright 2013.

ASTM INTERNATIONAL, Annual Book of ASTM Standards, Current.

CALIFORNIA BUILDING STANDARDS COMMISSION, 2013, *California Building Code* (CBC), California Code of Regulations Title 24, Part 2, Volumes 1 and 2.

CALIFORNIA DIVISION OF MINES AND GEOLOGY (2000), *"Seismic Hazard Evaluation of the Lake Forest 7.5-Minute Quadrangle, Orange County, California," Open File Report 2000-013.*

CALIFORNIA DIVISION OF MINES AND GEOLOGY (2001), "*State of California Seismic Hazard Zones, Lake Forest Quadrangle Official Map,"* January 17, 2001.

CALIFORNIA DIVISION OF MINES AND GEOLOGY (1994), *Fault Activity Map of California and Adjacent Areas, DMG Geologic Data Map No. 6.*

CALIFORNIA GEOLOGICAL SURVEY, 2008, *Guidelines for Evaluating and Mitigating Seismic Hazards in California:* Special Publication 117A.

DEPARTMENT OF THE NAVY, Naval Facilities Engineering Command, Alexandria, VA, *SOIL MECHANICS DESIGN MANUAL 7.1 (NAVFAC DM-7.1)*, 1982.

SOUTHERN CALIFORNIA EARTHQUAKE CENTER, *Recommended Procedures for Implementation of DMG Special Publication 117* Guidelines *for Analyzing and Mitigating Liquefaction in California*, March 1999.

STANDARD SPECIFICATIONS FOR PUBLIC WORKS CONSTRUCTION, 2015, Public Works Standards, Inc.

STUDIES IN GEOPHYSICS, 1986, Active Tectonics, Geophysics Study Committee, National Academy Press.

UNITED STATES GEOLOGICAL SURVEY, 2016, *U.S. Seismic Design Maps Application* by the United States Geological Survey dated March 12, 2016.

Copyright 2016 Converse Consultants

APPENDIX A

FIELD EXPLORATION

APPENDIX A

FIELD EXPLORATION

Our field study included a site reconnaissance, a pond depth survey, and subsurface exploration program consisting of drilling exploratory borings. During the site reconnaissance, the surface conditions were noted and the locations of the borings were determined. The borings were chosen based on specified site improvement locations by the City of Lake Forest and drill rig accessibility limitations. The exploratory borings were approximately located using existing boundary and other features as a guide and should be considered accurate only to the degree implied by the method used. The various field study methods performed are discussed below.

A1.1 Pond Depth Survey

A pond depth survey was conducted by Converse geologists on February 9 & 10, 2016 and included collecting 120 depth readings to gauge the volume of soft sediments and firm bottom depths of the pond. The 120 survey points were laid out on a 20’ x 20’ grid system at specific and methodical locations and measured using a boat. Depths to soft sediments were obtained using a tape measure and depths to firm bottoms were obtained using a steel rod that was pushed into the bottom sediments to establish firm bottom depth elevations.

The computer-modeled topographic contours of the lake bottom grades for the soft-sediment layer and the firm-sediment bottoms in the pond are shown on Drawing Nos. 3A and 3B, *Site Topography Soft Bottom and Firm Bottom*.

A1.2 Soil Borings

A total of six (6) exploratory borings (BH-1 through BH-6) were drilled within the project site on February 12, 2016. The borings were advanced using a limited access track mounted drill rig with an 8-inch diameter hollow stem auger to depths ranging from 11.5 to 51.5 feet below the existing ground surface (bgs). Each boring was visually logged by a Converse geologist and sampled at regular intervals and at changes in subsurface soils. Where appropriate, field descriptions and classifications have been modified to reflect laboratory test results. California Modified Sampler (Ring samples), Standard Penetration Test samples, and bulk soil samples were obtained from the borings at selected intervals for laboratory testing. All borings were backfilled with soil cuttings on February 12, 2016.

Ring samples of the subsurface materials were obtained at frequent intervals in the exploratory borings using a drive sampler (2.4-inch inside diameter and 3.0-inch outside diameter) lined with sample rings. The steel ring sampler was driven into the bottom of the borehole with successive drops of a 140-pound driving weight falling 30 inches, using an automatic hammer. Samples are retained in brass rings (2.4-inch inside diameter and 1.0-inch in height). The central portion of the sample was retained and carefully sealed

Copyright 2016 Converse Consultants

in waterproof plastic containers for shipment to the Converse laboratory. Blow counts for each sample interval are presented on the Log of Borings. Bulk samples of typical soil types were also obtained.

Standard Penetration Tests (SPT) were also performed using a standard (1.4-inch inside diameter and 2.0-inch outside diameter) split-barrel sampler. The mechanically driven hammer for the SPT sampler was 140 pounds, failing 30 inches for each blow. The recorded blow counts for every six inches for a total of 1.5 feet of sampler penetration are shown on the Log of Borings. The standard penetration test was performed in accordance with the ASTM Standard D1586 test method.

It should be noted that the exact depths at which material changes occur cannot always be established accurately. Unless a more precise depth can be established by other means, changes in material conditions that occur between driven samples are indicated in the logs at the top of the next drive sample.

A key to soil symbols and terms is presented as Drawing No. A-1. Logs of the exploratory borings are presented in Drawing Nos. A-2 through A-7, *Log of Borings.*

Copyright 2016 Converse Consultants

SOIL CLASSIFICATION CHART

MAJOR DIVISIONS			SYMBOLS GRAPH	SYMBOLS LETTER	TYPICAL DESCRIPTIONS
COARSE GRAINED SOILS MORE THAN 50% OF MATERIAL IS LARGER THAN NO. 200 SIEVE SIZE	GRAVEL AND GRAVELLY SOILS MORE THAN 50% OF COARSE FRACTION RETAINED ON NO. 4 SIEVE	CLEAN GRAVELS (LITTLE OR NO FINES)		GW	WELL-GRADED GRAVELS, GRAVEL - SAND MIXTURES, LITTLE OR NO FINES
				GP	POORLY-GRADED GRAVELS, GRAVEL - SAND MIXTURES, LITTLE OR NO FINES
		GRAVELS WITH FINES (APPRECIABLE AMOUNT OF FINES)		GM	SILTY GRAVELS, GRAVEL - SAND - SILT MIXTURES
				GC	CLAYEY GRAVELS, GRAVEL - SAND - CLAY MIXTURES
	SAND AND SANDY SOILS MORE THAN 50% OF COARSE FRACTION PASSING ON NO. 4 SIEVE	CLEAN SANDS (LITTLE OR NO FINES)		SW	WELL-GRADED SANDS, GRAVELLY SANDS, LITTLE OR NO FINES
				SP	POORLY-GRADED SANDS, GRAVELLY SAND, LITTLE OR NO FINES
		SANDS WITH FINES (APPRECIABLE AMOUNT OF FINES)		SM	SILTY SANDS, SAND - SILT MIXTURES
				SC	CLAYEY SANDS, SAND - CLAY MIXTURES
FINE GRAINED SOILS MORE THAN 50% OF MATERIAL IS SMALLER THAN NO. 200 SIEVE SIZE	SILTS AND CLAYS	LIQUID LIMIT LESS THAN 50		ML	INORGANIC SILTS AND VERY FINE SANDS, ROCK FLOUR, SILTY OR CLAYEY FINE SANDS OR CLAYEY SILTS WITH SLIGHT PLASTICITY
				CL	INORGANIC CLAYS OF LOW TO MEDIUM PLASTICITY, GRAVELLY CLAYS, SANDY CLAYS, SILTY CLAYS, LEAN CLAYS
				OL	ORGANIC SILTS AND ORGANIC SILTY CLAYS OF LOW PLASTICITY
	SILTS AND CLAYS	LIQUID LIMIT GREATER THAN 50		MH	INORGANIC SILTS, MICACEOUS OR DIATOMACEOUS FINE SAND OR SILTY SOILS
				CH	INORGANIC CLAYS OF HIGH PLASTICITY
				OH	ORGANIC CLAYS OF MEDIUM TO HIGH PLASTICITY, ORGANIC SILTS
HIGHLY ORGANIC SOILS				PT	PEAT, HUMUS, SWAMP SOILS WITH HIGH ORGANIC CONTENTS

NOTE: DUAL SYMBOLS ARE USED TO INDICATE BORDERLINE SOIL CLASSIFICATIONS

BORING LOG SYMBOLS

SAMPLE TYPE

- STANDARD PENETRATION TEST — Split barrel sampler in accordance with ASTM D-1586-84 Standard Test Method
- DRIVE SAMPLE — 2.42" I.D. sampler.
- DRIVE SAMPLE — No recovery
- BULK SAMPLE
- GRAB SAMPLE
- GROUNDWATER WHILE DRILLING
- GROUNDWATER AFTER DRILLING

NOTE: 10-DCP BLOWS

LW=LIGHT WEIGHT
HW= HEAVY WEIGHT

LABORATORY TESTING ABBREVIATIONS

TEST TYPE
(Results shown in Appendix B)

CLASSIFICATION

Plasticity	pi
Grain Size Analysis	ma
Passing No. 200 Sieve	wa
Sand Equivalent	se
Expansion Index	ei
Compaction Curve	max
Hydrometer	h

STRENGTH

Pocket Penetrometer	p
Direct Shear	ds
Direct Shear (single point)	ds*
Unconfined Compression	uc
Triaxial Compression	tx
Vane Shear	vs
Consolidation	c
Collapse Test	col
Resistance (R) Value	r
Chemical Analysis	ca
Electrical Resistivity	er

UNIFIED SOIL CLASSIFICATION AND KEY TO BORING LOG SYMBOLS

Converse Consultants

Project Name
VILLAGE POND PARK
23102 RIDGE ROUTE DRIVE
LAKE FOREST, CALIFORNIA
FOR: CITY OF LAKE FOREST

Project No. **15-32-162-01**
Drawing No. **A-1**

Log of Boring No. BH-1

Dates Drilled: 2/12/2016 Logged by: WB Checked By: SKS

Equipment: 8" HOLLOW STEM AUGER Driving Weight and Drop: 140 lbs / 30 in

Ground Surface Elevation (ft): 359 Depth to Water (ft): 30

Depth (ft)	Graphic Log	SUMMARY OF SUBSURFACE CONDITIONS This log is part of the report prepared by Converse for this project and should be read together with the report. This summary applies only at the location of the boring and at the time of drilling. Subsurface conditions may differ at other locations and may change at this location with the passage of time. The data presented is a simplification of actual conditions encountered.	SAMPLES DRIVE	SAMPLES BULK	BLOWS/FT	MOISTURE (%)	DRY UNIT WT. (pcf)	OTHER
		FILL (Af): **CLAYEY SAND (SC):** fine to medium-grained, trace silt, with gravel up to 2" in maximum dimension, dark brown.						ca,ma (fc=17%)
		ALLUVIUM (Qal): **CLAYEY SAND (SC):** fine to medium-grained, trace silt, light brown to brown.						
5			■		12/24/15	10	93	
10		**SANDY SILT (ML):** fine to medium grained sand, with trace clay, grayish brown.	■		10/12/21	16	109	
15		**CLAYEY SAND (SC):** fine to medium grained, with silt, brown.	■		10/20/21	11	122	
20		**SANDY CLAY (CL):** fine to medium-grained sand, with silt, dark brown.	☒		8/10/13			
25		**SILTY SAND (SM):** fine to medium-grained, some clay, grayish brown.	■		7/19/26	21	102	ds
30			☒		8/11/11			
		End of boring at 31.5 feet. Groundwater encountered at 30 feet. Borehole backfilled with soil cutttings on 2-12-16.						

Converse Consultants

Project Name
VILLAGE POND PARK
23102 RIDGE ROUTE DRIVE
LAKE FOREST, CALIFORNIA
FOR: CITY OF LAKE FOREST

Project No. **15-32-162-01**

Drawing No. **A-2**

Log of Boring No. BH-2

Dates Drilled: 2/12/2016 Logged by: WB Checked By: SKS

Equipment: 8" HOLLOW STEM AUGER Driving Weight and Drop: 140 lbs / 30 in

Ground Surface Elevation (ft): 358.5 Depth to Water (ft): 42

Depth (ft)	Graphic Log	SUMMARY OF SUBSURFACE CONDITIONS This log is part of the report prepared by Converse for this project and should be read together with the report. This summary applies only at the location of the boring and at the time of drilling. Subsurface conditions may differ at other locations and may change at this location with the passage of time. The data presented is a simplification of actual conditions encountered.	SAMPLES DRIVE	SAMPLES BULK	BLOWS/FT	MOISTURE (%)	DRY UNIT WT. (pcf)	OTHER
		FILL (Af): **CLAYEY SAND (SC):** fine to medium-grained, trace silt, dark brown.		X				Park-1
5		**ALLUVIUM (Qal):** **SANDY SILT (ML):** fine to medium-grained sand, with clay, gray.	X		14/15/16	11	125	
10		**SILTY SAND (SM):** fine to medium-grained, trace silt, light brown.	X		8/10/12			
15			X		9/9/14			wa(fc=15%)
20		-fine to coarse-grained with gravels up to 1" in maximum dimension	X		12/29/50(5")	3	111	
25		**SAND (SP):** fine to coarse-grained, with gravels up to 2" in maximum dimension, light brown.	X		13/30/24			wa(fc=9%)
30		-no recovery			50(2")			

Converse Consultants

Project Name
VILLAGE POND PARK
23102 RIDGE ROUTE DRIVE
LAKE FOREST, CALIFORNIA
FOR: CITY OF LAKE FOREST

Project No. **15-32-162-01**

Drawing No. **A-3a**

Log of Boring No. BH-2

Dates Drilled: 2/12/2016 Logged by: WB Checked By: SKS

Equipment: 8" HOLLOW STEM AUGER Driving Weight and Drop: 140 lbs / 30 in

Ground Surface Elevation (ft): 358.5 Depth to Water (ft): 42

Depth (ft)	Graphic Log	SUMMARY OF SUBSURFACE CONDITIONS This log is part of the report prepared by Converse for this project and should be read together with the report. This summary applies only at the location of the boring and at the time of drilling. Subsurface conditions may differ at other locations and may change at this location with the passage of time. The data presented is a simplification of actual conditions encountered.	SAMPLES DRIVE	SAMPLES BULK	BLOWS/FT	MOISTURE (%)	DRY UNIT WT. (pcf)	OTHER
		CLAYEY SAND (SC): fine to medium-grained, yellowish brown.	X		22/40/47			wa(fc=25%)
40		-light brown	■		50(6")	21	100	
45		-grayish brown to orangish brown	X		25/44/50(5")			wa(fc=23%)
50		-no recovery			51(6")			

End of boring at 51.5 feet.
No groundwater encountered during drilling.
Borehole backfilled with soil cuttings on 2-12-16.

Converse Consultants

Project Name
VILLAGE POND PARK
23102 RIDGE ROUTE DRIVE
LAKE FOREST, CALIFORNIA
FOR: CITY OF LAKE FOREST

Project No. **15-32-162-01**

Drawing No. **A-3b**

Log of Boring No. BH-3

Dates Drilled: 2/12/2016 Logged by: WB Checked By: SKS

Equipment: 8" HOLLOW STEM AUGER Driving Weight and Drop: 140 lbs / 30 in

Ground Surface Elevation (ft): 359.5 Depth to Water (ft): N/A

Depth (ft)	Graphic Log	SUMMARY OF SUBSURFACE CONDITIONS This log is part of the report prepared by Converse for this project and should be read together with the report. This summary applies only at the location of the boring and at the time of drilling. Subsurface conditions may differ at other locations and may change at this location with the passage of time. The data presented is a simplification of actual conditions encountered.	SAMPLES DRIVE	SAMPLES BULK	BLOWS/FT	MOISTURE (%)	DRY UNIT WT. (pcf)	OTHER
		FILL (Af): **CLAYEY SAND (SC):** fine to medium-grained, with silt, gravel up to 3" in maximum dimension, light brown to brown.						max
5		**ALLUVIUM (Qal):** **SANDY CLAY (CL):** fine to coarse-grained sand, with gravel up to 1" in maximum dimension, light brown.	■		9/16/22	9	96	pi
10		**CLAYEY SAND (SC):** fine to medium-grained, light brown to brown.	■		8/14/18	13	114	

End of boring at 11.5 feet.
No groundwater encountered during drilling.
Borehole backfilled with soil cuttings on 2-12-16.

Converse Consultants

Project Name
VILLAGE POND PARK
23102 RIDGE ROUTE DRIVE
LAKE FOREST, CALIFORNIA
FOR: CITY OF LAKE FOREST

Project No. **15-32-162-01**

Drawing No. **A-4**

Log of Boring No. BH-4

Dates Drilled: 2/12/2016 Logged by: WB Checked By: SKS

Equipment: 8" HOLLOW STEM AUGER Driving Weight and Drop: 140 lbs / 30 in

Ground Surface Elevation (ft): 355.8 Depth to Water (ft): NOT ENCOUNTERED

Depth (ft)	Graphic Log	SUMMARY OF SUBSURFACE CONDITIONS This log is part of the report prepared by Converse for this project and should be read together with the report. This summary applies only at the location of the boring and at the time of drilling. Subsurface conditions may differ at other locations and may change at this location with the passage of time. The data presented is a simplification of actual conditions encountered.	SAMPLES DRIVE	SAMPLES BULK	BLOWS/FT	MOISTURE (%)	DRY UNIT WT. (pcf)	OTHER
		FILL (Af): **SILTY SAND (SM):** fine to medium-grained, brown.						ei,ca Park-2
		ALLUVIUM (Qal): **CLAYEY SAND (SC):** fine to medium-grained, trace silt, light brown to brown.	■		7/16/28	9	112	ds
5			■		7/16/28	13	108	c
10		**SANDY CLAY TO CLAYEY SAND (CL-SC):** fine to medium-grained sand, light brown to gray.	■		6/7/9	14	110	
15		**CLAYEY SAND (SC):** fine to coarse-grained, brown.	■		10/45/43	7	138	
20		**SILTY SAND (SM):** with some clay, fine to medium grained, reddish brown to brown.	■		20/20/27	28	101	

End of boring at 21.5 feet.
Groundwater not encountered during drilling.
Borehole backfilled with soil cuttings on 2-12-16.

Converse Consultants

Project Name
VILLAGE POND PARK
23102 RIDGE ROUTE DRIVE
LAKE FOREST, CALIFORNIA
FOR: CITY OF LAKE FOREST

Project No. **15-32-162-01**

Drawing No. **A-5**

Log of Boring No. BH-5

Dates Drilled: 2/12/2016 Logged by: WB Checked By: SKS

Equipment: 8" HOLLOW STEM AUGER Driving Weight and Drop: 140 lbs / 30 in

Ground Surface Elevation (ft): 359.9 Depth to Water (ft): N/A

Depth (ft)	Graphic Log	SUMMARY OF SUBSURFACE CONDITIONS This log is part of the report prepared by Converse for this project and should be read together with the report. This summary applies only at the location of the boring and at the time of drilling. Subsurface conditions may differ at other locations and may change at this location with the passage of time. The data presented is a simplification of actual conditions encountered.	SAMPLES DRIVE	SAMPLES BULK	BLOWS/FT	MOISTURE (%)	DRY UNIT WT. (pcf)	OTHER
		FILL (Af): **CLAYEY SAND (SC):** fine to medium-grained, dark brown.						max
			■		6/7/9	13	112	
		ALLUVIUM (Qal): **SANDY CLAY (CL):** fine to medium-grained sand, brown.						
5			■		6/10/19	14	114	
10			■		5/6/10	16	114	
		End of boring at 11.5 feet. Groundwater not encountered during drilling. Borehole backfilled with soil cuttings on 2-12-16.						

Converse Consultants

Project Name
VILLAGE POND PARK
23102 RIDGE ROUTE DRIVE
LAKE FOREST, CALIFORNIA
FOR: CITY OF LAKE FOREST

Project No. **15-32-162-01**

Drawing No. **A-6**

Log of Boring No. BH-6

Dates Drilled: 2/12/2016 Logged by: WB Checked By: SKS

Equipment: 8" HOLLOW STEM AUGER Driving Weight and Drop: 140 lbs / 30 in

Ground Surface Elevation (ft): 369.8 Depth to Water (ft): N/A

Depth (ft)	Graphic Log	SUMMARY OF SUBSURFACE CONDITIONS This log is part of the report prepared by Converse for this project and should be read together with the report. This summary applies only at the location of the boring and at the time of drilling. Subsurface conditions may differ at other locations and may change at this location with the passage of time. The data presented is a simplification of actual conditions encountered.	SAMPLES DRIVE	SAMPLES BULK	BLOWS/FT	MOISTURE (%)	DRY UNIT WT. (pcf)	OTHER
		FILL (Af): **CLAYEY SAND (SC):** fine to medium-grained, dark brown.						ei,ma (fc=36%) Park-3
		ALLUVIUM (Qal): **CLAYEY SAND (SC):** fine to medium-grained, light brown.						
5			■		35/50(5")	7	114	
10		-with gravel up to 3" in maximum dimension	■		20/15/21	13	122	
15		**CLAYEY SILT (ML):** with fine grained sand, light brown.	■		13/16/16	12	114	
20		-dark brown	■		7/15/22	17	115	
		End of boring at 21.5 feet. Groundwater not encountered during drilling. Borehole backfilled with soil cuttings on 2-12-16.						

Converse Consultants

Project Name
VILLAGE POND PARK
23102 RIDGE ROUTE DRIVE
LAKE FOREST, CALIFORNIA
FOR: CITY OF LAKE FOREST

Project No. **15-32-162-01**

Drawing No. **A-7**

APPENDIX B

LABORATORY TESTING PROGRAM

APPENDIX B

LABORATORY TESTING PROGRAM

Tests were conducted in our geotechnical laboratory on representative soil samples for the purpose of classification and evaluation of their relevant physical characteristics and engineering properties. The amount and selection of tests were based on the geotechnical parameters required for the design and construction of the project. Test results are presented herein and on the Log of Borings in Appendix A, *Field Exploration*. The following is a summary of the various laboratory tests conducted for this project.

B1.1 Moisture Content and Dry Density

Results of moisture content and dry density tests, performed on relatively undisturbed ring samples were used to aid in the classification of the soils and to provide quantitative measure of the *in situ* dry density. Data obtained from these tests provides qualitative information on strength and compressibility characteristics of site soils. For test results, see the Log of Borings in Appendix A, *Field Exploration*.

B1.2 Grain-Size Analysis

To assist in classification of soils, mechanical grain-size analyses were performed on two (2) selected samples. Testing was performed in general accordance with the ASTM Standard C136 test method. Grain-size curves are shown in Drawing No. B-1, *Grain Size Distribution Results*.

B1.3 Percent Finer than the No. 200 Sieve

The percent finer than sieve No. 200 test was performed on four (4) soil samples to aid in the classification of the on-site soils and to estimate other engineering parameters. Testing was performed in general accordance with the ASTM Standard D1140 test method. The test results are presented in the following table:

Table No. B-1, Percent Passing Sieve # 200 Results

Boring No.	Depth (feet)	Soil Classification	Percent Passing Sieve No. 200
BH-2	15	Silty Sand (SM)	15%
BH-2	25	Sand (SP)	9%
BH-2	35	Clayey Sand (SC)	25%
BH-2	45	Clayey Sand (SC)	23%

Copyright 2016 Converse Consultants

B1.4 Maximum Dry Density Test

Two (2) laboratory maximum dry density-optimum moisture content relationship tests were performed on bulk samples of soil from upper five (5) feet below the existing ground surface. The tests were conducted in accordance with ASTM Standard D1557 laboratory procedure. The test results are presented on Drawing No. B-2, *Moisture-Density Relationship Results*.

B1.5 Atterberg Limits

Atterberg limits tests were performed on one (1) sample to assist the classification of the soils according to ASTM Standard D4318 test method. The test results are presented in the following table and are presented on Drawing No. B-3, *Atterberg Limits Results*.

Table No. B-2 Atterberg Limit Test Results

Boring No.	Depth (feet)	Soil Classification	Liquid Limit (%)	Plastic Limit (%)	Plastic Index (%)
BH-3	5	Sandy Clay (CL)	27.5	17.5	10

B1.6 Direct Shear

Direct shear tests were performed on two (2) samples at soaked moisture conditions. For each test, three specimens contained in brass sampler rings were placed, one at a time, directly into the test apparatus and subjected to a range of normal loads appropriate for the anticipated conditions. The samples were sheared at a constant strain rate of 0.005 inches per minute. Shear deformation was recorded until a maximum of about 0.25-inch shear displacement was achieved. Ultimate strength was selected from the shear-stress deformation data and plotted to determine the shear strength parameters. For test data, including sample density and moisture content, see Drawing Nos. B-4a and B-4b*, Direct Shear Test Results* and the following table:

Table No. B-3, Direct Shear Test Results

Boring No.	Depth (feet)	Soil Classification	Ultimate Strength Parameters	
			Friction Angle (degrees)	Cohesion (psf)
BH-1	25	Silty Sand (SM)	31	20
BH-4	2.5	Clayey Sand (SC)	25	360

B1.7 Consolidation Test

Data obtained from one (1) test, performed on a relatively undisturbed soil sample, was used to evaluate the settlement characteristics of the alluvial soils under load. Preparation for the test involved trimming the samples and placing the one-inch high brass ring with soil sample into the test apparatus, which contained porous stones, both

Copyright 2016 Converse Consultants

top and bottom of the ring, to accommodate drainage during testing. Normal axial loads were applied to the sample through the porous stones, and the resulting deflections were recorded at various time periods. The load was increased after the sample reached a reasonable state of equilibrium. Normal loads were applied at a constant load-increment ratio, successive loads being generally twice the preceding load. The sample was tested at field and submerged conditions. The test results, including sample density and moisture content, are presented in Drawing No. B-5, *Consolidation Test Results*.

B1.8 Expansion Index Test

Two (2) representative bulk samples were tested for expansion index to evaluate the expansion potential of the clayey material encountered at the site. Test results are presented in the following table:

Table No. B-5, Expansion Index Test Results

Boring No.	Depth (feet)	Soil Description	Expansion Index	Expansion Potential
BH-4	0-5	Silty Sand (SM)	43	Low
BH-6	0-5	Silty Sand (SM)	19	Very Low

B1.9 Soil Corrosivity

Two (2) soil samples were tested to determine minimum electrical resistivity, pH, and chemical content, including soluble sulfate and chloride concentrations. The purpose of these tests are to determine the corrosion potential of site soils when placed in contact with common construction materials. These tests were performed by EGL. The test results are presented in the following table and included at the end of this appendix.

Table No. B-6, Corrosivity Test Results

Boring Number	Depth (feet)	pH	Soluble Chloride (CA 422) (ppm)	Soluble Sulfate (CA 417) (ppm)	Saturated Resistivity (CA 643) Ohm-cm
BH-1	0-5	7.18	185	0.090	930
BH-4	0-5	7.56	320	0.173	420

B1.10 Sample Storage

Soil samples presently stored in our laboratory will be discarded 30 days after the date of this report, unless this office receives a specific request to retain the samples for a longer period.

Copyright 2016 Converse Consultants

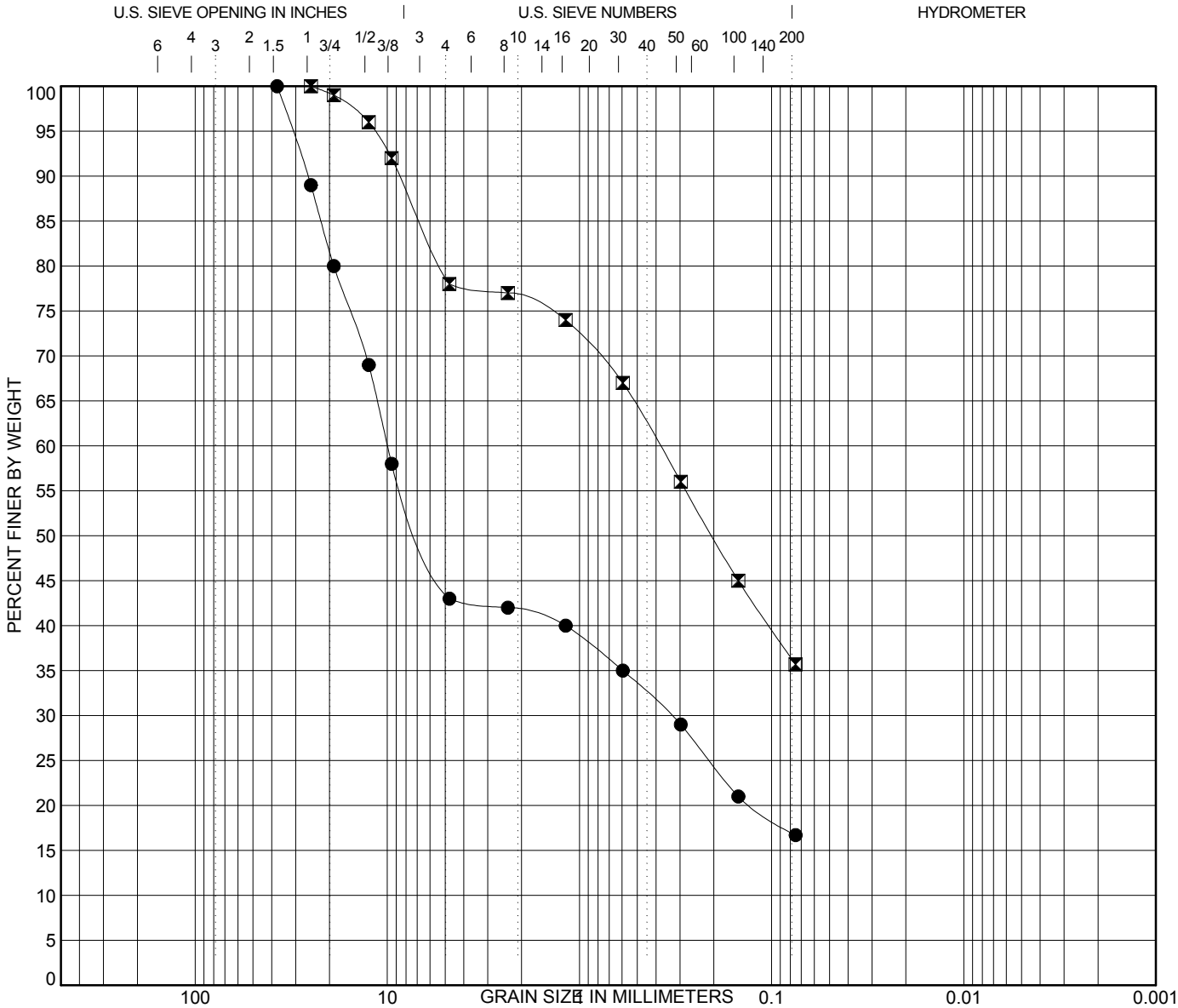

COBBLES	GRAVEL		SAND			SILT OR CLAY
	coarse	fine	coarse	medium	fine	

	Boring No.	Depth (ft)	Description	LL	PL	PI	Cc	Cu
●	**BH-1**	**0-5**	**CLAYEY SAND (SC)**					
⧗	**BH-6**	**0-5**	**CLAYEY SAND (SC)**					

	Boring No.	Depth (ft)	D100	D60	D30	D10	%Gravel	%Sand	%Silt	%Clay
●	**BH-1**	**0-5**	**37.5**	**9.986**	**0.333**		**57.0**	**26.3**	**16.7**	
⧗	**BH-6**	**0-5**	**25**	**0.382**			**22.0**	**42.3**	**35.7**	

GRAIN SIZE DISTRIBUTION RESULTS

Converse Consultants

Project Name
VILLAGE POND PARK
23102 RIDGE ROUTE DRIVE
LAKE FOREST, CALIFORNIA
FOR: CITY OF LAKE FOREST

Project No.
15-32-162-01

Drawing No.
B-1

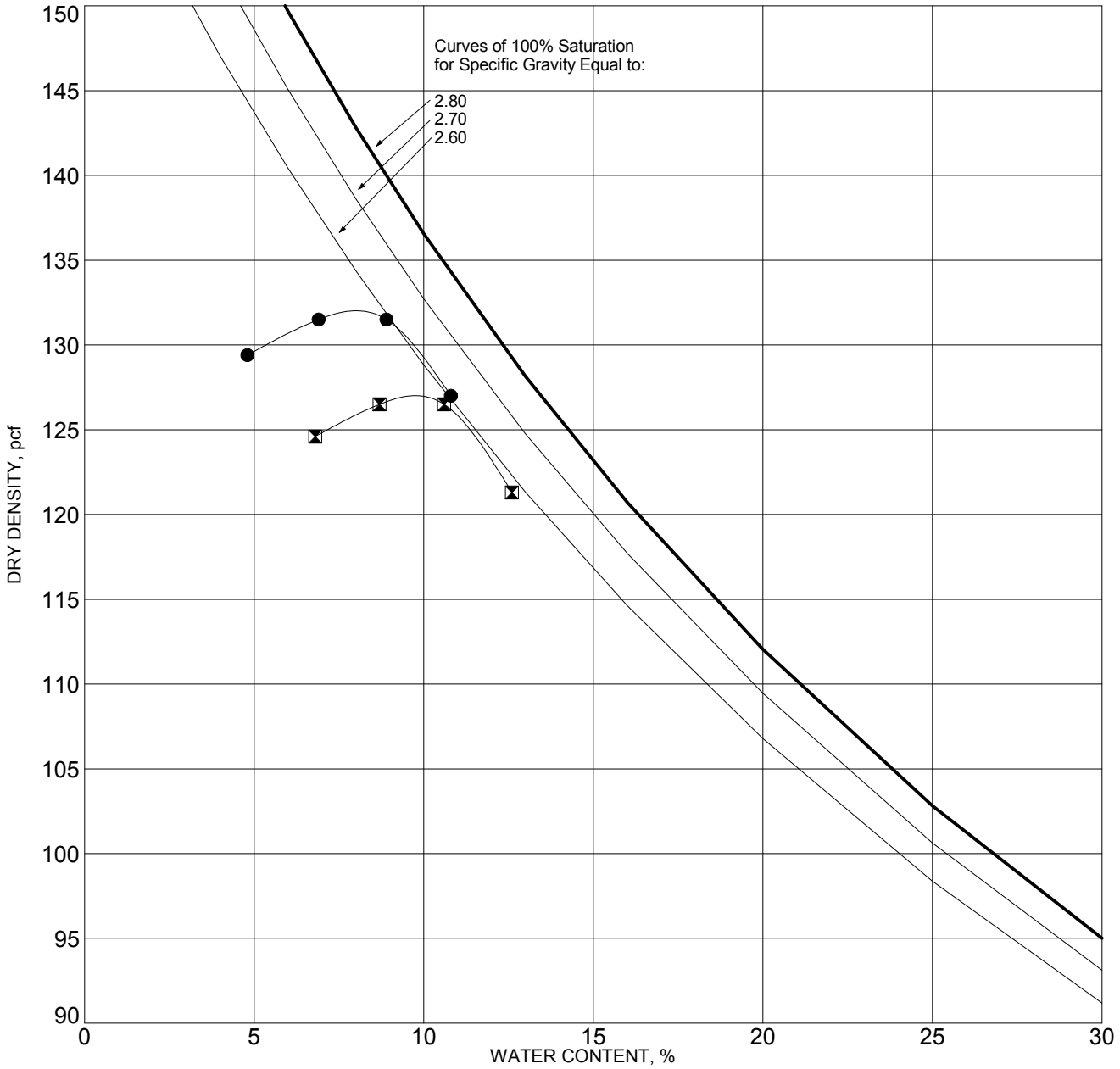

SYMBOL	BORING NO.	DEPTH (ft)	DESCRIPTION	ASTM TEST METHOD	OPTIMUM WATER, %	MAXIMUM DRY DENSITY, pcf
●	BH-3	0-5	CLAYEY SAND (SC)	D1557 Method A	7.9	131.7
⧗	BH-5	0-5	CLAYEY SAND (SC)	D1557 Method A	9.6	126.7

NOTE:

MOISTURE-DENSITY RELATIONSHIP RESULTS

Converse Consultants

Project Name
VILLAGE POND PARK
23102 RIDGE ROUTE DRIVE
LAKE FOREST, CALIFORNIA
FOR: CITY OF LAKE FOREST

Project No.
15-32-162-01

Drawing No.
B-2

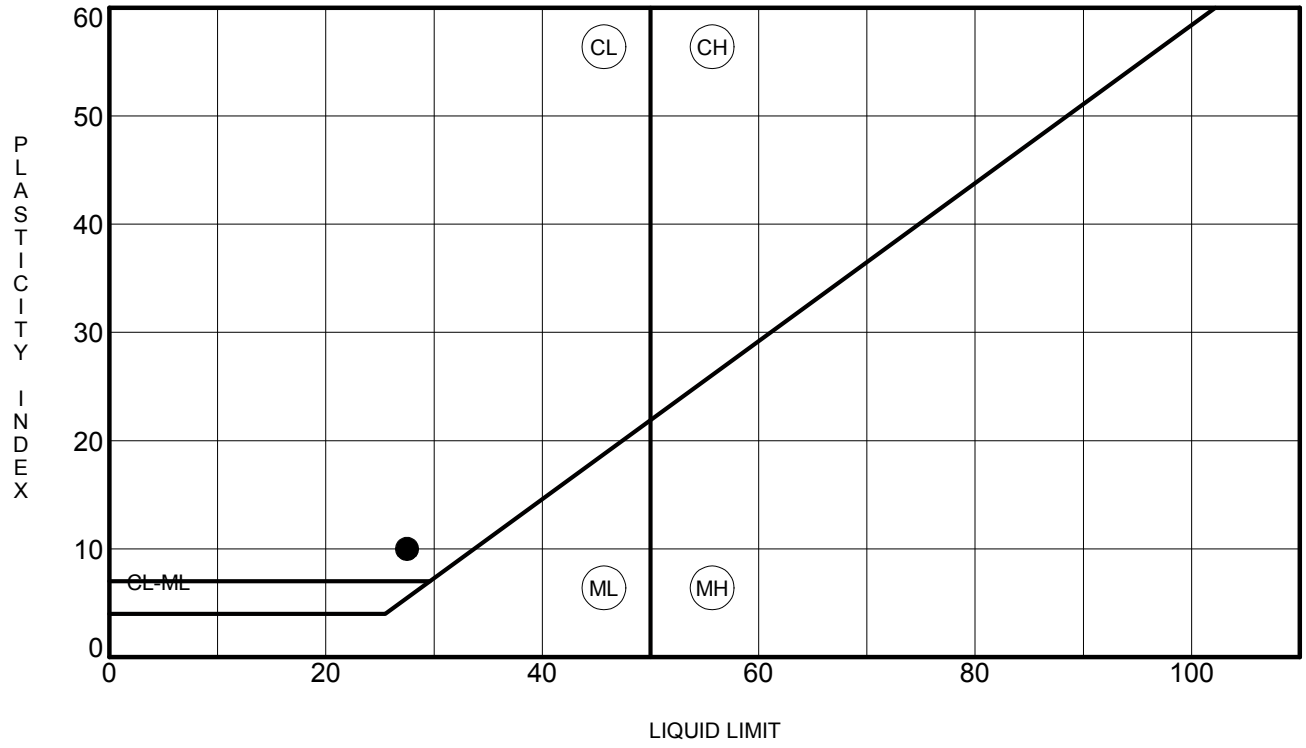

Symbol	Boring No.	Depth (ft)	LL (%)	PL (%)	PI (%)	Description
●	**BH-3**	**5**	**27.5**	**17.5**	**10**	**SANDY CLAY (CL)**

ATTERBERG LIMITS RESULTS

Converse Consultants

Project Name
VILLAGE POND PARK
23102 RIDGE ROUTE DRIVE
LAKE FOREST, CALIFORNIA
FOR: CITY OF LAKE FOREST

Project No.
15-32-162-01

Drawing No.
B-3

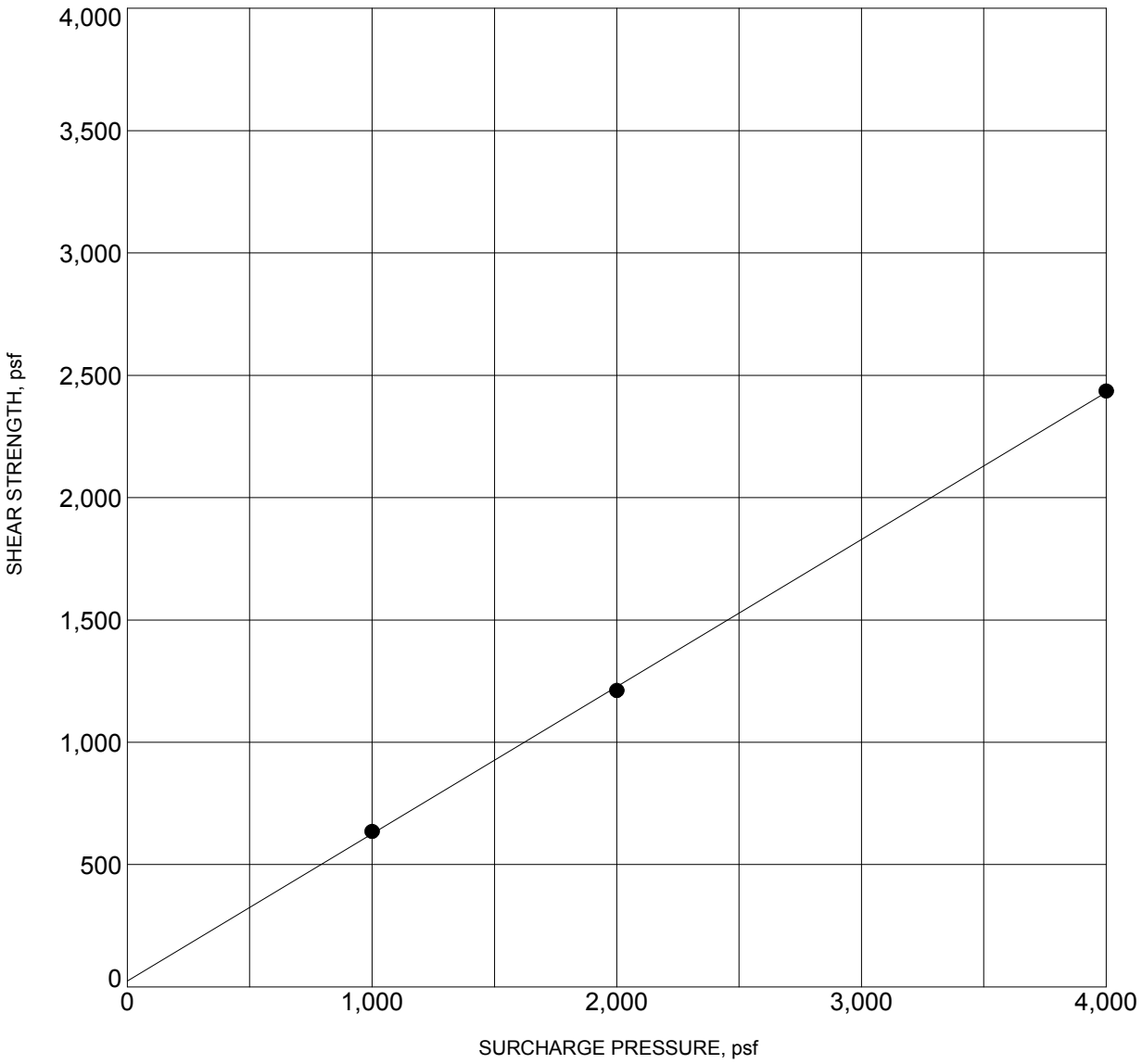

BORING NO. :	**BH-1**	DEPTH (ft) :	**25**
DESCRIPTION :	**SILTY SAND (SM)**		
COHESION (psf) :	**20**	FRICTION ANGLE (degrees):	**31**
MOISTURE CONTENT (%) :	**21.2**	DRY DENSITY (pcf) :	**102.0**

NOTE: Ultimate Strength.

DIRECT SHEAR TEST RESULTS

Converse Consultants

Project Name
VILLAGE POND PARK
23102 RIDGE ROUTE DRIVE
LAKE FOREST, CALIFORNIA
FOR: CITY OF LAKE FOREST

Project No. **15-32-162-01**

Drawing No. **B-4a**

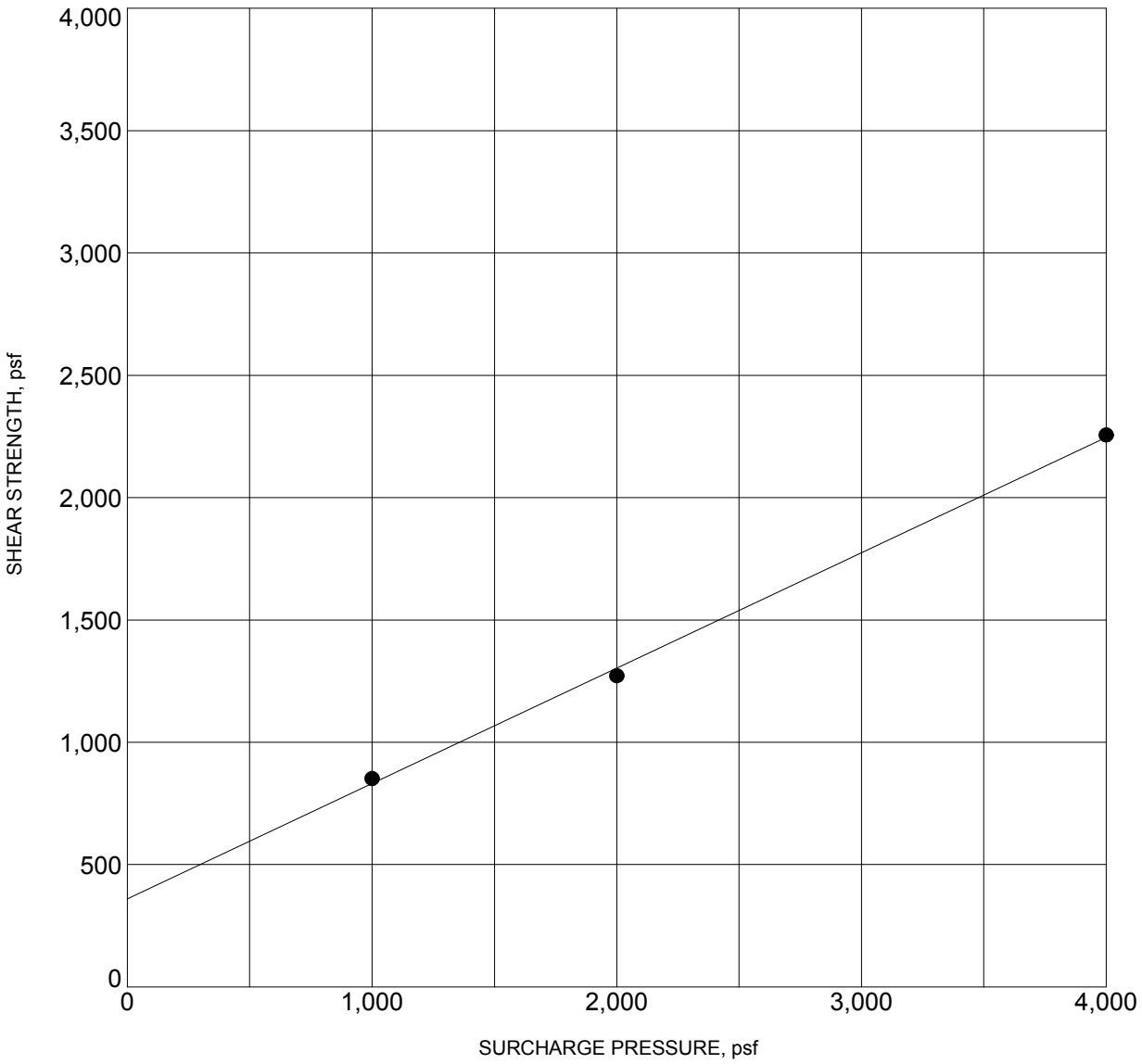

BORING NO. :	**BH-4**	DEPTH (ft) :	**2.5**
DESCRIPTION :	**CLAYEY SAND (SC)**		
COHESION (psf) :	**360**	FRICTION ANGLE (degrees):	**25**
MOISTURE CONTENT (%) :	**9.3**	DRY DENSITY (pcf) :	**112.3**

NOTE: Ultimate Strength.

DIRECT SHEAR TEST RESULTS

Converse Consultants

Project Name
VILLAGE POND PARK
23102 RIDGE ROUTE DRIVE
LAKE FOREST, CALIFORNIA
FOR: CITY OF LAKE FOREST

Project No. **15-32-162-01**

Drawing No. **B-4b**

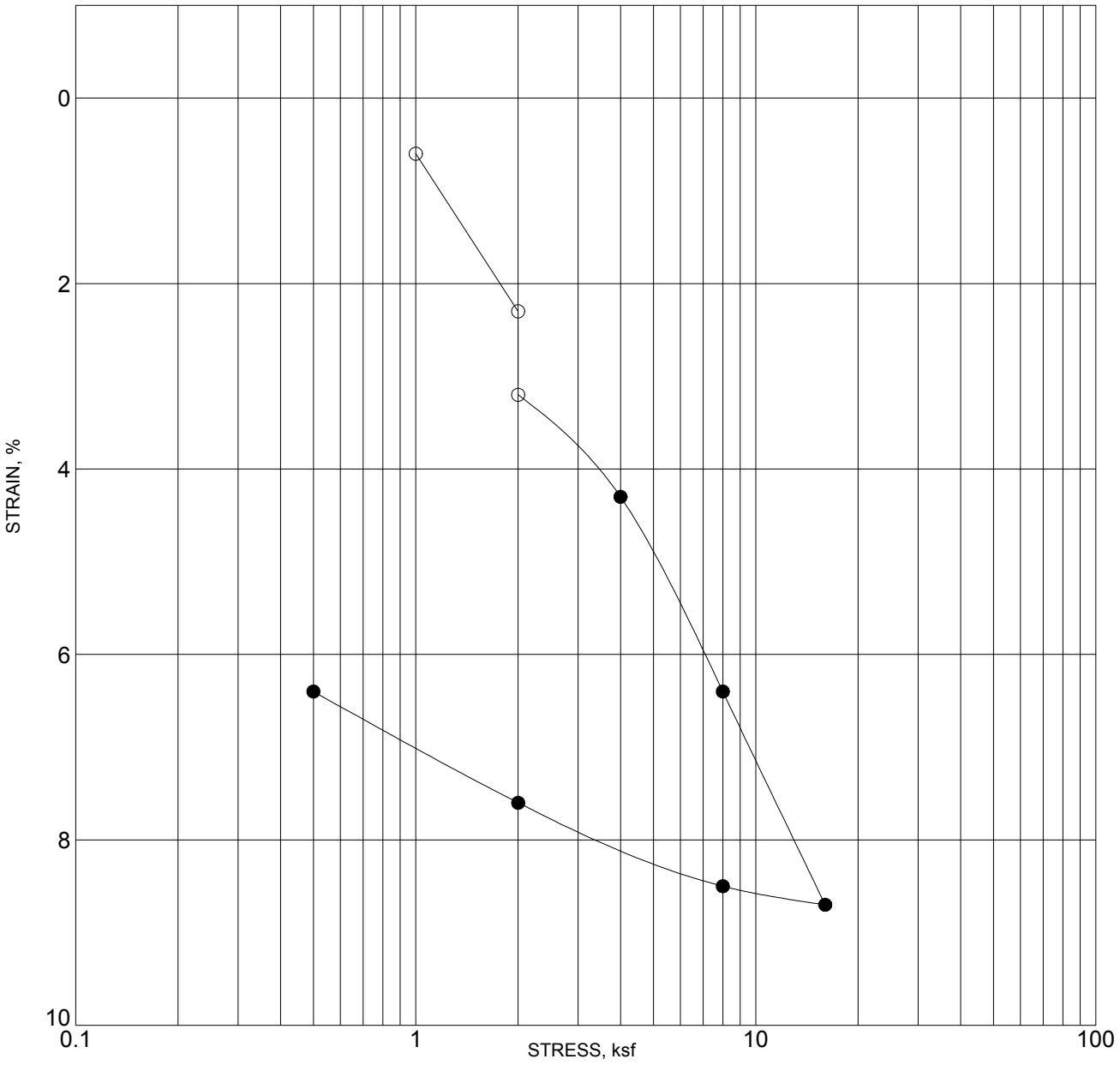

BORING NO. :	BH-4	DEPTH (ft) :	5
DESCRIPTION :	CLAYEY SAND (SC)		

	MOISTURE CONTENT (%)	DRY DENSITY (pcf)	PERCENT SATURATION	VOID RATIO
INITIAL	13.3	107.9		
FINAL	16.5	114.8		

NOTE: SOLID CIRCLES INDICATE READINGS AFTER ADDITION OF WATER

CONSOLIDATION TEST RESULTS

Converse Consultants

Project Name
VILLAGE POND PARK
23102 RIDGE ROUTE DRIVE
LAKE FOREST, CALIFORNIA
FOR: CITY OF LAKE FOREST

Project No. **15-32-162-01**

Drawing No. **B-5**

APPENDIX C

EARTHWORK SPECIFICATIONS

APPENDIX C

EARTHWORK SPECIFICATIONS

C1.1 Scope of Work

The work includes all labor, supplies and construction equipment required to construct the structure pads in a good, workman-like manner, as shown on the drawings and herein specified. The major items of work covered in this section include the following:

- Site Inspection
- Authority of Geotechnical Engineer
- Site Clearing
- Excavations
- Preparation of Fill Areas
- Placement and Compaction of Fill
- Observation and Testing

C1.2 Site Inspection

1. The Contractor shall carefully examine the site and make all inspections necessary, in order to determine the full extent of the work required to make the completed work conform to the drawings and specifications. The Contractor shall satisfy himself as to the nature and location of the work, ground surface and the characteristics of equipment and facilities needed prior to and during prosecution of the work. The Contractor shall satisfy himself as to the character, quality, and quantity of surface and subsurface materials or obstacles to be encountered. Any inaccuracies or discrepancies between the actual field conditions and the drawings, or between the drawings and specifications must be brought to the Owner's attention in order to clarify the exact nature of the work to be performed.

2. This *Geotechnical Study Report* by Converse Consultants may be used as a reference to the surface and subsurface conditions on this project. The information presented in this report is intended for use in design and is subject to confirmation of the conditions encountered during construction. The exploration logs and related information depict subsurface conditions only at the particular time and location designated on the boring logs. Subsurface conditions at other locations may differ from conditions encountered at the exploration locations. In addition, the passage of time may result in a change in subsurface conditions at the exploration locations. Any review of this information shall not relieve the Contractor from performing such independent study and evaluation to satisfy himself as to the nature of the surface and subsurface conditions to be encountered and the procedures to be used in performing his work.

Copyright 2016 Converse Consultants

C1.3 Authority of the Geotechnical Engineer

1. The Geotechnical Engineer will observe the placement of compacted fill and will take sufficient tests to evaluate the uniformity and degree of compaction of filled ground.

2. As the Owner's representative, the Geotechnical Engineer will (a) have the authority to cause the removal and replacement of loose, soft, disturbed and other unsatisfactory soils and uncontrolled fill; (b) have the authority to approve the preparation of native ground to receive fill material; and (c) have the authority to approve or reject soils proposed for use in structure areas.

3. The Civil Engineer and/or Owner will decide all questions regarding (a) the interpretation of the drawings and specifications, (b) the acceptable fulfillment of the contract on the part of the Contractor and (c) the matters of compensation.

C1.4 Site Clearing

1. Clearing and grubbing shall consist of the removal from structure areas to be graded of all existing structures, pavement, utilities, and vegetation.

2. Organic and inorganic materials resulting from the clearing and grubbing operations shall be hauled away from the areas to be graded.

C1.5 Excavations

1. Based on observations made during our field explorations, the surficial soils can be excavated with conventional earthwork equipment.

C1.6 Preparation of Fill Areas

1. All organic material, organic soils, incompetent alluvium, undocumented fill soils and debris should be removed from the proposed structure areas.

2. Soils should be removed to a minimum depth as described in Section 11.2 of the report. In the unanticipated event of soft, yielding, or unsuitable soils exposed at the excavation bottom, appropriate mitigation options will be provided. These options may include selective removal and recompaction, crushed rock and geotextile placement, and/or in-situ densification.

3. The subgrade in all areas to receive fill shall be scarified to a minimum depth of six (6) inches, the soil moisture adjusted within three (3) percent of optimum for fine-grained soils and granular soils, and then compacted to at least 90 percent of the laboratory maximum dry density as determined by ASTM Standard D1557 test method. Scarification may be terminated on moderately hard to hard, cemented earth materials with the approval of the Geotechnical Engineer.

Copyright 2016 Converse Consultants

4. Compacted fill may be placed on native soils that have been properly scarified and recompacted as discussed above.

5. All areas to receive compacted fill will be observed and approved by the Geotechnical Engineer before the placement of fill.

C1.7 Placement and Compaction of Fill

1. Compacted fill placed for the support of foundations, slabs-on-grade, hardscape, pavement, exterior concrete flatwork, and driveways will be considered structural fill. Structural fill may consist of approved on-site soils or imported fill that meets the criteria indicated below.

2. Fill consisting of selected on-site earth materials or imported soils approved by the Geotechnical Engineer shall be placed in layers on approved earth materials. Soils used as compacted structural fill shall have the following characteristics:

   a. All fill soil particles shall not exceed three (3) inches in nominal size, and shall be free of organic matter and miscellaneous inorganic debris and inert rubble.
   b. Imported fill materials shall have an Expansion Index (EI) less than 30. All imported fill should be compacted to at least 90 percent of the laboratory maximum dry density (ASTM Standard D1557) at about three (3) percent above optimum moisture for fine-grained soils, and within three (3) percent of optimum for granular soils. Based upon the Geotechnical Consultant's approval, imported soils with Expansion Index between 30 and 50 may be placed within landscape areas without any major structures.

3. Fill soils shall be evenly spread in maximum 8-inch lifts, watered or dried as necessary, mixed and compacted to at least the density specified below. The fill shall be placed and compacted on a horizontal plane, unless otherwise approved by the Geotechnical Engineer.

4. All fill placed at the site shall be compacted to at least 90 percent (95 percent in certain areas specified in the report) of the laboratory maximum dry density as determined by ASTM Standard D1557 test method. The on-site soils shall be moisture conditioned within three (3) percent of the optimum moisture content. At least the upper 12 inches of subgrade soils underneath the concrete apron, pavement and parking areas should be compacted to a minimum of 95 percent of the laboratory maximum dry density.

5. Fill exceeding five (5) feet in height shall not be placed on native slopes that are steeper than 5:1 horizontal:vertical (H:V). Where native slopes are steeper than 5:1 H:V, and the height of the fill is greater than five (5) feet, the fill shall be benched

Copyright 2016 Converse Consultants

into competent materials. The height and width of the benches shall be at least two (2) feet.

6. Representative samples of materials being used as compacted fill will be analyzed in the laboratory by the Geotechnical Engineer to obtain information on their physical properties. Maximum laboratory density of each soil type used in the compacted fill will be determined by the ASTM Standard D1557 test method.

7. Fill materials shall not be placed, spread or compacted during unfavorable weather conditions. When site grading is interrupted by heavy rain, filling operations shall not resume until the Geotechnical Engineer approves the moisture and density conditions of the previously placed fill.

8. It shall be the Grading Contractor's obligation to take all measures deemed necessary during grading to provide erosion control devices in order to protect slope areas and adjacent properties from storm damage and flood hazard originating on this project. It shall be the contractor's responsibility to maintain slopes in their as-graded form until all slopes are in satisfactory compliance with job specifications, all berms have been properly constructed, and all associated drainage devices meet the requirements of the Civil Engineer.

C1.8 Trench Backfill

The following specifications are recommended to provide a basis for quality control during the placement of trench backfill.

1. Trench excavations to receive backfill shall be free of trash, debris or other unsatisfactory materials at the time of backfill placement.

2. Trench backfill shall be compacted to specified relative compaction in accordance with recommendations in Section 11.3, Structural Fill. At least the upper twelve (12) inches of trench underlying pavements should be compacted to at least 95 percent of the laboratory maximum dry density.

3. Rocks larger than one (1) inch should not be placed within 12 inches of the top of the pipeline or within the upper 12 inches of pavement or structure subgrade. No more than 30 percent of the backfill volume shall be larger than 3/4-inch in largest dimension diameter, and rocks shall be well mixed with finer soil.

4. The pipe design engineer should select bedding material for the pipe. Bedding materials generally should have a Sand Equivalent (SE) greater than or equal to 30, as determined by the ASTM Standard D2419 test method.

5. Trench backfill shall be compacted by mechanical methods, such as sheepsfoot, vibrating or pneumatic rollers, or mechanical tampers, to achieve the density

Copyright 2016 Converse Consultants

specified herein. The backfill materials shall be brought to within three (3) percent of optimum moisture content and then placed in horizontal layers if the expansion index is less than or equal to 30. Should the expansion index be greater than 30, backfill materials shall be brought to approximately three (3) percent above optimum moisture content. The thickness of uncompacted layers should not exceed 8 inches. Each layer shall be evenly spread, moistened or dried as necessary, and then tamped or rolled until the specified density has been achieved.

6. The contractor shall select the equipment and processes to be used to achieve the specified density without damage to adjacent ground and completed work.

7. The field density of the compacted soil shall be measured by the ASTM Standard D1556 or ASTM Standard D2922 test methods or equivalent.

8. Observation and field tests should be performed by Geotechnical Consultant during construction to confirm that the required degree of compaction has been obtained. Where compaction is less than that specified, additional compactive effort shall be made with adjustment of the moisture content as necessary, until the specified compaction is obtained.

9. It should be the responsibility of the Contractor to maintain safe conditions during cut and/or fill operations.

10. Trench backfill shall not be placed, spread or rolled during unfavorable weather conditions. When the work is interrupted by heavy rain, fill operations shall not be resumed until field tests by the project's geotechnical consultant indicate that the moisture content and density of the fill are as previously specified.

C1.9 Observation and Testing

1. During the progress of grading, the Geotechnical Consultant provide observation of the fill placement operations.

2. Field density tests will be made during grading to provide an opinion on the degree of compaction being obtained by the contractor. Where compaction of less than specified herein is indicated, additional compactive effort with adjustment of the moisture content shall be made as necessary, until the required degree of compaction is obtained.

3. A sufficient number of field density tests will be performed to provide an opinion to the degree of compaction achieved. In general, density tests will be performed on each one-foot lift of fill, but not less than one for each 500 cubic yards of fill placed.

Copyright 2016 Converse Consultants

APPENDIX D

LIQUEFACTION/SEISMIC SETTLEMENT ANALYSIS

APPENDIX D

LIQUEFACTION/SEISMIC SETTLEMENT ANALYSIS

Liquefaction is defined as the phenomenon where a soil mass exhibits a substantial reduction in its shear strength. This strength reduction is due to the development of excess pore pressure in a soil mass caused by earthquake induced ground motions. Saturated soils behave temporarily as a viscous fluid (liquefaction) and, consequently, lose their capacity to support the structures founded on them. The potential for liquefaction decreases with increasing clay and gravel content, but increases as the ground acceleration and duration of shaking increase. Liquefaction potential has been found to be the greatest where the groundwater level and loose sands occur within 50 feet of the ground surface.

Our liquefaction analyses are based on the *Special Publication 117A: Guidelines for Evaluating and Mitigating Seismic Hazards in California* (9/2008), *Recommended Procedures for Implementation of DMG Special Publication 117, Guidelines for Analyzing and Mitigating Liquefaction Hazards in California* (3/1999), and *2013 California Building Code*.

The subsurface data obtained from exploratory borings were used to evaluate the liquefaction/seismic settlement potential of the area. The Log of Borings is presented in Appendix A, *Field Exploration*. The liquefaction potential and seismic settlement analyses were performed utilizing data obtained from BH-2 for the upper 50 feet of soil. The analyses were performed using *LiquefyPro,* Version 5.8n, 2012, by Civil Tech Software. The following seismic parameters are used for liquefaction potential analyses.

Table No. C-1 Seismic Parameters Used in Liquefaction Analysis

Groundwater Depth* (feet)	Earthquake Magnitude** Mw	Peak Ground Acceleration*** (g)
10	6.62	0.558

* Based on Seismic Hazard Zone Report for the Lake Forest 7.5-Minute Quadrangle
** Based on the 2008 NSHMP PSHA Interactive Deaggregation web site for a return period of 2475 years
*** Based on PGA_M per section 21.5 of ASCE 7-10.

The results of liquefaction analyses indicate the site soils are not susceptible to liquefaction. However, dry seismically-induced settlement is expected. The estimated potential seismically induced settlement, assuming groundwater present at 10 feet below ground surface is anticipated to be less than 0.25 inches with potential differential settlement of approximately 0.15 inches. The project structural engineer should consider the effect of these settlements on foundation design.

Copyright 2016 Converse Consultants

LIQUEFACTION ANALYSIS

City of Lake Forest Village Pond Park

Hole No.=BH-2 Water Depth=10 ft

Magnitude=6.62
Acceleration=0.558g

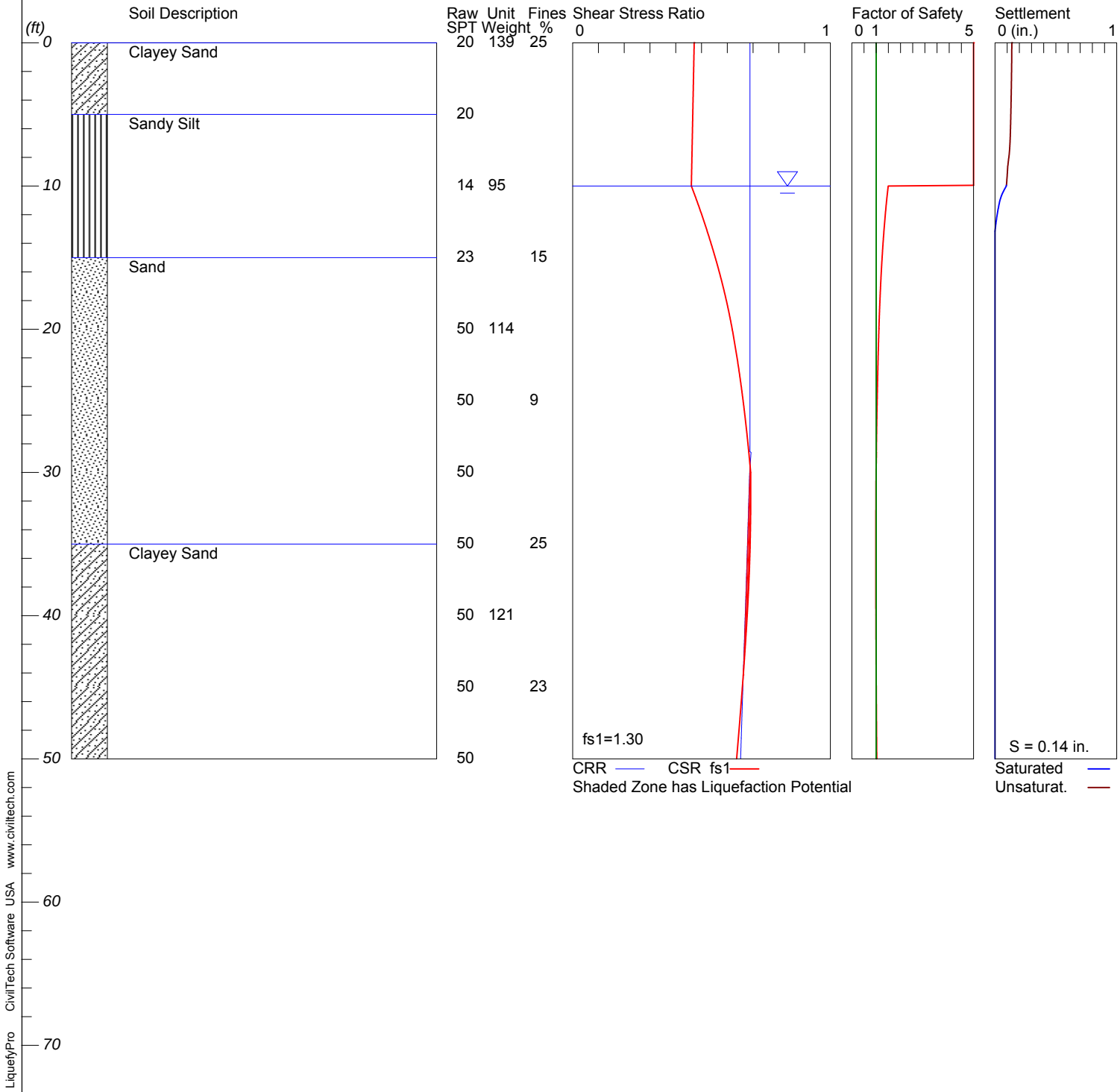

LiquefyPro CivilTech Software USA www.civiltech.com

****

LIQUEFACTION ANALYSIS SUMMARY

Copyright by CivilTech Software

www.civiltech.com

****

Font: Courier New, Regular, Size 8 is recommended for this report.
Licensed to , 3/25/2016 1:17:32 PM

Input File Name: N:\Liquefy5\15-32-162-01-LQ-BH2.liq
Title: City of Lake Forest Village Pond Park
Subtitle: 15-32-162-01

Surface Elev.=
Hole No.=BH-2
Depth of Hole= 50.00 ft
Water Table during Earthquake= 10.00 ft
Water Table during In-Situ Testing= 30.00 ft
Max. Acceleration= 0.56 g
Earthquake Magnitude= 6.62

Input Data:

Surface Elev.=
Hole No.=BH-2
Depth of Hole=50.00 ft
Water Table during Earthquake= 10.00 ft
Water Table during In-Situ Testing= 30.00 ft
Max. Acceleration=0.56 g
Earthquake Magnitude=6.62
No-Liquefiable Soils: CL, OL are Non-Liq. Soil

1. SPT or BPT Calculation.
2. Settlement Analysis Method: Tokimatsu/Seed
3. Fines Correction for Liquefaction: Stark/Olson et al.*
4. Fine Correction for Settlement: During Liquefaction*
5. Settlement Calculation in: All zones*
6. Hammer Energy Ratio, Ce = 1.25
7. Borehole Diameter, Cb= 1.15
8. Sampling Method, Cs= 1.2
9. User request factor of safety (apply to CSR) , User= 1.3
   Plot one CSR curve (fs1=User)
10. Use Curve Smoothing: Yes*
* Recommended Options

In-Situ Test Data:

Depth ft	SPT	gamma pcf	Fines %
0.00	20.00	139.00	25.00
5.00	20.00	139.00	25.00
10.00	14.00	95.00	25.00
15.00	23.00	95.00	15.00
20.00	50.00	114.00	15.00
25.00	50.00	114.00	9.00
30.00	50.00	114.00	9.00
35.00	50.00	114.00	25.00
40.00	50.00	121.00	25.00
45.00	50.00	121.00	23.00
50.00	50.00	121.00	23.00

Output Results:

Settlement of Saturated Sands=0.09 in.
Settlement of Unsaturated Sands=0.04 in.
Total Settlement of Saturated and Unsaturated Sands=0.14 in.
Differential Settlement=0.069 to 0.091 in.

Depth	CRRm	CSRfs	F.S.	S_sat.	S_dry	S_all

ft				in.	in.	Liquefy.sum in.
0.00	0.69	0.47	5.00	0.09	0.04	0.14
0.50	0.69	0.47	5.00	0.09	0.04	0.14
1.00	0.69	0.47	5.00	0.09	0.04	0.14
1.50	0.69	0.47	5.00	0.09	0.04	0.14
2.00	0.69	0.47	5.00	0.09	0.04	0.14
2.50	0.69	0.47	5.00	0.09	0.04	0.14
3.00	0.69	0.47	5.00	0.09	0.04	0.13
3.50	0.69	0.47	5.00	0.09	0.04	0.13
4.00	0.69	0.47	5.00	0.09	0.04	0.13
4.50	0.69	0.47	5.00	0.09	0.04	0.13
5.00	0.69	0.47	5.00	0.09	0.04	0.13
5.50	0.69	0.47	5.00	0.09	0.04	0.13
6.00	0.69	0.46	5.00	0.09	0.03	0.13
6.50	0.69	0.46	5.00	0.09	0.03	0.13
7.00	0.69	0.46	5.00	0.09	0.03	0.12
7.50	0.69	0.46	5.00	0.09	0.03	0.12
8.00	0.69	0.46	5.00	0.09	0.02	0.11
8.50	0.69	0.46	5.00	0.09	0.01	0.11
9.00	0.69	0.46	5.00	0.09	0.01	0.10
9.50	0.69	0.46	5.00	0.09	0.00	0.10
10.00	0.69	0.46	1.49	0.09	0.00	0.09
10.50	0.69	0.47	1.46	0.06	0.00	0.06
11.00	0.69	0.48	1.43	0.04	0.00	0.04
11.50	0.69	0.49	1.40	0.03	0.00	0.03
12.00	0.69	0.50	1.37	0.02	0.00	0.02
12.50	0.69	0.51	1.35	0.01	0.00	0.01
13.00	0.69	0.52	1.32	0.00	0.00	0.00
13.50	0.69	0.53	1.30	0.00	0.00	0.00
14.00	0.69	0.54	1.28	0.00	0.00	0.00
14.50	0.69	0.55	1.26	0.00	0.00	0.00
15.00	0.69	0.55	1.24	0.00	0.00	0.00
15.50	0.69	0.56	1.23	0.00	0.00	0.00
16.00	0.69	0.57	1.21	0.00	0.00	0.00
16.50	0.69	0.58	1.19	0.00	0.00	0.00
17.00	0.69	0.58	1.18	0.00	0.00	0.00
17.50	0.69	0.59	1.17	0.00	0.00	0.00
18.00	0.69	0.60	1.15	0.00	0.00	0.00
18.50	0.69	0.60	1.14	0.00	0.00	0.00
19.00	0.69	0.61	1.13	0.00	0.00	0.00
19.50	0.69	0.61	1.12	0.00	0.00	0.00
20.00	0.69	0.62	1.11	0.00	0.00	0.00
20.50	0.69	0.62	1.10	0.00	0.00	0.00
21.00	0.69	0.63	1.09	0.00	0.00	0.00
21.50	0.69	0.63	1.09	0.00	0.00	0.00
22.00	0.69	0.64	1.08	0.00	0.00	0.00
22.50	0.69	0.64	1.07	0.00	0.00	0.00
23.00	0.69	0.65	1.06	0.00	0.00	0.00
23.50	0.69	0.65	1.06	0.00	0.00	0.00
24.00	0.69	0.65	1.05	0.00	0.00	0.00
24.50	0.69	0.66	1.05	0.00	0.00	0.00
25.00	0.69	0.66	1.04	0.00	0.00	0.00
25.50	0.69	0.66	1.03	0.00	0.00	0.00
26.00	0.69	0.67	1.03	0.00	0.00	0.00
26.50	0.69	0.67	1.02	0.00	0.00	0.00
27.00	0.69	0.67	1.02	0.00	0.00	0.00
27.50	0.69	0.68	1.02	0.00	0.00	0.00
28.00	0.69	0.68	1.01	0.00	0.00	0.00
28.50	0.69	0.68	1.01	0.00	0.00	0.00
29.00	0.69	0.69	1.01	0.00	0.00	0.00
29.50	0.69	0.69	1.00	0.00	0.00	0.00
30.00	0.69	0.69	0.99*	0.00	0.00	0.00
30.50	0.69	0.69	0.99*	0.00	0.00	0.00
31.00	0.68	0.69	0.99*	0.00	0.00	0.00
31.50	0.68	0.69	0.99*	0.00	0.00	0.00
32.00	0.68	0.69	0.99*	0.00	0.00	0.00

32.50	0.68	0.69	0.99*	0.00	0.00	0.00
33.00	0.68	0.69	0.99*	0.00	0.00	0.00
33.50	0.68	0.69	0.99*	0.00	0.00	0.00
34.00	0.68	0.69	0.99*	0.00	0.00	0.00
34.50	0.68	0.69	0.99*	0.00	0.00	0.00
35.00	0.68	0.69	0.98*	0.00	0.00	0.00
35.50	0.68	0.69	0.98*	0.00	0.00	0.00
36.00	0.68	0.69	0.98*	0.00	0.00	0.00
36.50	0.68	0.69	0.98*	0.00	0.00	0.00
37.00	0.67	0.69	0.98*	0.00	0.00	0.00
37.50	0.67	0.68	0.99*	0.00	0.00	0.00
38.00	0.67	0.68	0.99*	0.00	0.00	0.00
38.50	0.67	0.68	0.99*	0.00	0.00	0.00
39.00	0.67	0.68	0.99*	0.00	0.00	0.00
39.50	0.67	0.68	0.99*	0.00	0.00	0.00
40.00	0.67	0.68	0.99*	0.00	0.00	0.00
40.50	0.67	0.68	0.99*	0.00	0.00	0.00
41.00	0.67	0.67	0.99*	0.00	0.00	0.00
41.50	0.67	0.67	0.99*	0.00	0.00	0.00
42.00	0.67	0.67	0.99*	0.00	0.00	0.00
42.50	0.66	0.67	0.99*	0.00	0.00	0.00
43.00	0.66	0.67	1.00*	0.00	0.00	0.00
43.50	0.66	0.66	1.00*	0.00	0.00	0.00
44.00	0.66	0.66	1.00*	0.00	0.00	0.00
44.50	0.66	0.66	1.00	0.00	0.00	0.00
45.00	0.66	0.66	1.00	0.00	0.00	0.00
45.50	0.66	0.66	1.00	0.00	0.00	0.00
46.00	0.66	0.65	1.01	0.00	0.00	0.00
46.50	0.66	0.65	1.01	0.00	0.00	0.00
47.00	0.66	0.65	1.01	0.00	0.00	0.00
47.50	0.66	0.65	1.01	0.00	0.00	0.00
48.00	0.66	0.65	1.01	0.00	0.00	0.00
48.50	0.65	0.64	1.02	0.00	0.00	0.00
49.00	0.65	0.64	1.02	0.00	0.00	0.00
49.50	0.65	0.64	1.02	0.00	0.00	0.00
50.00	0.65	0.64	1.02	0.00	0.00	0.00

* F.S.<1, Liquefaction Potential Zone
(F.S. is limited to 5, CRR is limited to 2, CSR is limited to 2)

Units: Unit: qc, fs, Stress or Pressure = atm (1.0581tsf); Unit Weight = pcf; Depth = ft; Settlement = in.

1 atm (atmosphere) = 1 tsf (ton/ft2)

CRRm	Cyclic resistance ratio from soils
CSRsf	Cyclic stress ratio induced by a given earthquake (with user request factor of safety)
F.S.	Factor of Safety against liquefaction, F.S.=CRRm/CSRsf
S_sat	Settlement from saturated sands
S_dry	Settlement from Unsaturated Sands
S_all	Total Settlement from Saturated and Unsaturated Sands
NoLiq	No-Liquefy Soils

APPENDIX E

LANDSCAPE SOIL SAMPLING AND TESTING

APPENDIX E

LANDSCAPE SOIL SAMPLING AND TESTING

Six (6) soil samples were collected for landscape soil analysis, three (3) from different locations within the pond (Pond-1, Pond-2 and Pond-3), and three (3) from different locations within the park in borings BH-2, BH-4 and BH-6 (Park-1, Park 2 and Park 3, respectively). The three (3) pond soil samples were obtained at depths ranging from 8 to 10 feet below pond water surface using a 4-inch diameter hand auger. The approximate location of the pond soil sample areas is shown on Drawing No. 3A, *Site Topography and Soft Bottom*.

The three (3) soil samples in the park (Park-1, Park-2 and Park-3) were obtained at depths of approximately 18 to 24 inches below ground surface in soil borings BH-2, BH-4 and BH-6, respectively. The location of soil borings BH-2, BH-4 and BH-6 are presented on Drawing No. 2, *Proposed Site Plan and Boring Location Map*.

Approximately 1 pound of soil was sampled, sealed, and labeled in the provided sampling bags for each of the six (6) selected soil samples and were mailed to Gro-Power Laboratory for testing and analysis.

Soil analysis for organic matter, estimated nitrogen release, phosphorus, Bray 1, HCO3-P, potassium, magnesium, calcium, sodium, soil pH, buffer pH, hydrogen, C.E.C. (computed), percent cation saturation (computed), soluble salts, excess lime, nitrate nitrogen, sulfate sulfur, zinc, manganese, iron, copper and boron along with soil texture tests and soil fertility guidelines were performed by A & L Western Agriculture Laboratories. Based on the soil testing and analysis, Gro-Power, Inc. prepared landscape soil recommendations for soil preparation, backfill, hydroseeding, and maintenance for the site soils.

The graphical soils analysis reports as well as the soil analysis recommendations from Gro-Power, Inc. are presented at the end of Appendix E, *Environmental Sampling and Testing*.

Copyright 2016 Converse Consultants

SOIL ANALYSIS RECOMMENDATIONS

March 7, 2016

Converse Consultants
717 S. Myrtle Ave.
Monrovia, CA 91016
Attn: Mohammad Malim

Project Name: Village Pond Park **Project Number: 15-32-162-01**

The following recommendations are based on the results of soil analysis #50464-#50466 and #50481 - #50483 from A & L Western Agricultural Laboratories dated March 4, 2016.

SOIL PREPARATION:

Park 1, 3

Materials recommended per 1000 square feet

200 lbs. Gro-Power® Plus
15 lbs. soil sulfur
90 lbs. agricultural gypsum
3 cu. yd. of nitrolized shavings or good quality compost

Park 2

Materials recommended per 1000 square feet

150 lbs. Gro-Power® Plus
15 lbs. soil sulfur
90 lbs. agricultural gypsum
3 cu. yd. of nitrolized shavings or good quality compost

Pond 1, 2

Materials recommended per 1000 square feet

75 lbs. Gro-Power® Plus
25 lbs. soil sulfur
1 ½ cu. yd. of nitrolized shavings or good quality compost

Pond 3

Materials recommended per 1000 square feet

200 lbs. Gro-Power® Plus
30 lbs. soil sulfur
3 cu. yd. of nitrolized shavings or good quality compost

GRO POWER® INC.
15065 TELEPHONE AVENUE CHINO, CA 91710-9614 • (909) 393-3744 • FAX (909) 393-2773
www.gropower.com • e-mail:gropowerinc@verizon.net

SOIL PREPARATION: ***(continued)***

Initially cross rip to a depth of 10 – 12 inches and thoroughly leach. Then apply recommended materials and rototill a minimum of two directions, to a depth of 4-6 inches. After soil preparation, but prior to planting, irrigate with overhead irrigation so that a minimum of 4-6 inches of good quality water passes through the soil profile, beyond the root zone. Drainage is critical.

BACKFILL:

Park 1, 3

Materials recommended per cubic yard of mix

70% native on site soil, by volume
30% nitrolized shavings or good quality compost
16 lbs. Gro-Power® Plus
1 lb. soil sulfur
5 lbs. agricultural gypsum
Gro-Power® Planting Tablets for extended feed/conditioning

Park 2

Materials recommended per cubic yard of mix

70% native on site soil, by volume
30% nitrolized shavings or good quality compost
12 lbs. Gro-Power® Plus
1 lb. soil sulfur
5 lbs. agricultural gypsum
Gro-Power® Planting Tablets for extended feed/conditioning

Pond 1, 3

70% native on site soil, by volume
30% nitrolized shavings or good quality compost
6 lbs. Gro-Power® Plus
1 ½ lb. soil sulfur
Gro-Power® Planting Tablets for extended feed/conditioning

Pond 2

70% native on site soil, by volume
30% nitrolized shavings or good quality compost
16 lbs. Gro-Power® Plus
2 lb. soil sulfur
Gro-Power® Planting Tablets for extended feed/conditioning

BACKFILL: ***(continued)***

Dig planting pits 1½ times the width and 1 time the depth of the root ball. Fill pits with backfill mix to the depth of the root ball and irrigate thoroughly. Be sure entire root ball area is covered when planting.

******Specialty plants may require special backfill mix and planting instructions.

EVALUATION OF SOIL ELEMENTS:

1. pH is HIGH, indicating alkaline soil. Gro-Power®, soil sulfur and leaching will help to lower levels over time.
2. Lime level is HIGH in all Pond areas; possible iron-chlorosis. Soil sulfur will help to lower lime levels over time.
3. EC (soluble salts) is MODERATE to HIGH; leaching will help lower levels over time.
4. Boron is MODERATELY ELEVATED in Park 2 and Pond 1 and 2. Leaching will help to lower levels of boron in root zone over time.
5. Exchangeable sodium is HIGH in Park areas and MODERATELY ELEVATED in Pond areas, but much may be soluble and leached out with soluble salts. Addition of gypsum in soil preparation may aid mitigating any poor drainage due to sodium more quickly. In Pond areas, existing calcium should aid in lowering any excess sodium as pH is lowered with no additional amendment necessary.
6. Major nutrients: Nitrogen is LOW to HIGH - Phosphorus is LOW to HIGH - Potassium is LOW. Gro-Power® products used at specified rates will provide adequate major and micronutrients for plant establishment and vigorous growth.

SPECIAL COMMENTS:

1. Selective plant palette critical, re: alkalinity, salinity, elevated lime, elevated boron, elevated sodium.
2. Aggressive leaching critical to this site during construction and maintenance phases. (If leaching out boron in this site, you might check with the local water district to make sure boron level in water in not elevated. No point in attempting to leach out water that also has elevated boron.)
3. Drainage is critical.
4. Amendments are more effective when thoroughly mixed into the soil.

Thank you for giving Gro-Power®, Inc. the opportunity to make recommendations on this project. If I may be of further assistance to you, or you have any questions regarding the above stated recommendations, please don't hesitate to contact me at (562) 754-0415.

Sincerely,

Jack L. Engberg

Soil Analysis Consultant

JE/jma

A & L WESTERN AGRICULTURAL LABORATORIES

1311 WOODLAND AVE #1 • MODESTO, CALIFORNIA 95351 • (209) 529-4080 • FAX (209) 529-4736

REPORT NUMBER: 16-061-067 **CLIENT NO:** 1358

SEND TO: GRO-POWER INC
15065 TELEPHONE AVENUE
CHINO, CA 91710-9614

GROWER: CONVERSE CONSULTANTS

SUBMITTED BY: VILLAGE POND PARK

Graphical Soil Analysis Report

DATE OF REPORT: 03/04/16 **LAB NO:** 50481 **SAMPLE ID:** POND1 **PAGE:** 1

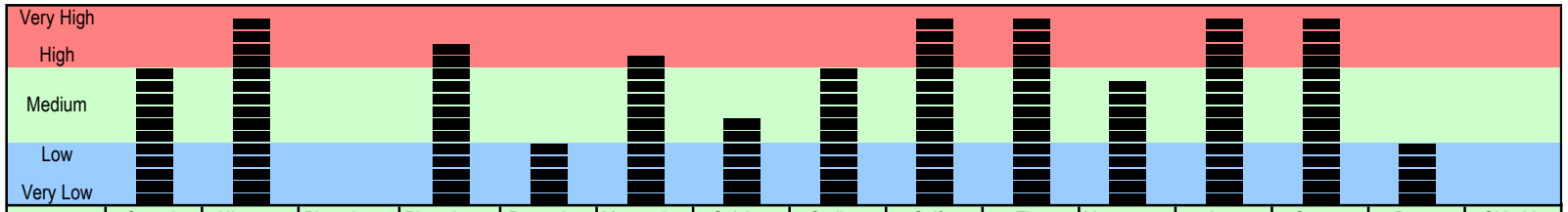

Analyte	Organic Matter %	Nitrogen NO_3-N ppm	Phosphorus Weak Bray ppm	Phosphorus $NaHCO_3$-P ppm	Potassium K ppm	Magnesium Mg ppm	Calcium Ca ppm	Sodium Na ppm	Sulfur SO_4-S ppm	Zinc Zn ppm	Manganese Mn ppm	Iron Fe ppm	Copper Cu ppm	Boron B ppm	Chloride Cl ppm
Results	4.7	133	18	29	219	675	3079	425	323	10.4	14	51	54.6	0.7	

LOW AVERAGE HIGH

Percent Cation Saturation (computed)

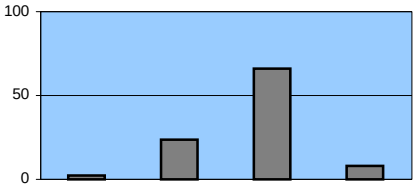

Potassium K %	Magnesium Mg %	Calcium Ca %	Sodium Na %
2.4	23.8	65.9	7.9

ACIDIC BASIC

ECe dS/m	CEC meq/100g	Ex. Lime	pH
4.1	23.3	H	7.7

INCREASING SALINITY →

← INCREASING NEED FOR LIME

Buffer pH:

Weak Bray P unreliable at M or H excess lime or pH > 7.5

Soil Fertility Guidelines

CROP: LANDSCAPE **RATE:** lb/1000 sq ft **NOTES:**

Dolomite (70 score)	Lime (70 score)	Gypsum	Elemental Sulfur	Nitrogen N	Phosphate P_2O_5	Potash K_2O	Magnesium Mg	Sulfur SO_4-S	Zinc Zn	Manganese Mn	Iron Fe	Copper Cu	Boron B	
			25		1.0	1.0								

COMMENTS

ORGANIC MATTER levels maintained above 2.0 percent will provide an improved soil structure and a more sustained release of nutrients. Follow supplier's instructions where levels are low.
ACIDIFICATION of high pH soils could improve soil environment. Compare different sources of acidifying materials, but be aware that sulfate-sulfur (as shown on report) has NO acidifying power.
SODIUM: If a concern, broadcast amendment and incorporate if possible. Follow with frequent/heavy watering to aid in the amending (but check water quality first and avoid leaching nitrates).
EXCESSIVE NITROGEN may promote excessive vegetative growth, reduce pH and encourage disease. Restrict further nitrogen applications where soil levels are high. Protect ground water!

Phoebe Gordon, PhD
A & L WESTERN LABORATORIES, INC

"Our reports and letters are for the exclusive and confidential use of our clients, and may not be reproduced in whole or in part, nor may any reference be made to the work, the result or the company in any advertising, news release, or other public announcements without obtaining our prior written authorization." The yield of any crop is controlled by many factors in additions to nutrition. While these recommendations are based on agronomic research and experience, they DO NOT GUARANTEE the achievement of satisfactory performance. © Copyright 1994 A & L WESTERN LABORATORIES, INC.

A & L WESTERN AGRICULTURAL LABORATORIES

1311 WOODLAND AVE #1 • MODESTO, CALIFORNIA 95351 • (209) 529-4080 • FAX (209) 529-4736

REPORT NUMBER: 16-061-067 **CLIENT NO:** 1358

SEND TO: GRO-POWER INC
15065 TELEPHONE AVENUE
CHINO, CA 91710-9614

GROWER: CONVERSE CONSULTANTS

SUBMITTED BY: VILLAGE POND PARK

Graphical Soil Analysis Report

DATE OF REPORT: 03/04/16 **LAB NO:** 50482 **SAMPLE ID:** POND2 **PAGE:** 2

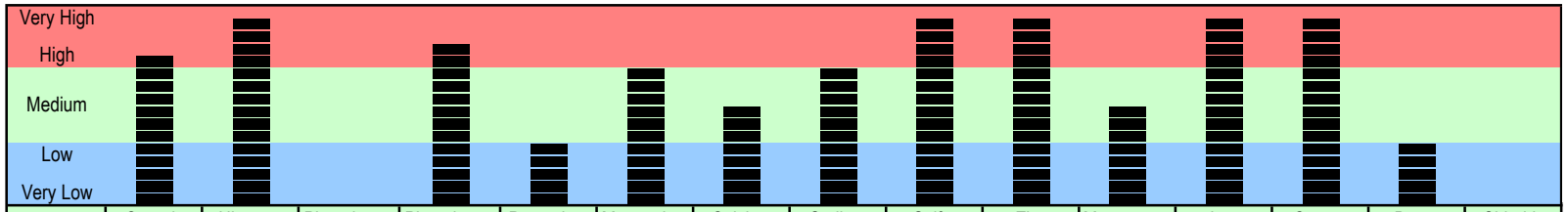

Analyte	Organic Matter %	Nitrogen NO_3-N ppm	Phosphorus Weak Bray ppm	Phosphorus $NaHCO_3$-P ppm	Potassium K ppm	Magnesium Mg ppm	Calcium Ca ppm	Sodium Na ppm	Sulfur SO_4-S ppm	Zinc Zn ppm	Manganese Mn ppm	Iron Fe ppm	Copper Cu ppm	Boron B ppm	Chloride Cl ppm
Results	4.9	114	15	30	164	546	2687	336	215	10.1	8	53	48.6	0.7	

LOW AVERAGE HIGH

Percent Cation Saturation (computed)

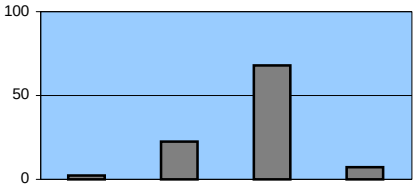

Potassium K %	Magnesium Mg %	Calcium Ca %	Sodium Na %
2.1	22.7	67.8	7.4

ACIDIC BASIC

ECe dS/m	CEC meq/100g	Ex. Lime	pH
2.9	19.8	H	7.7

INCREASING SALINITY →

← INCREASING NEED FOR LIME

Buffer pH:

Weak Bray P unreliable at M or H excess lime or pH > 7.5

Soil Fertility Guidelines

CROP: LANDSCAPE **RATE:** lb/1000 sq ft **NOTES:**

Dolomite (70 score)	Lime (70 score)	Gypsum	Elemental Sulfur	Nitrogen N	Phosphate P_2O_5	Potash K_2O	Magnesium Mg	Sulfur SO_4-S	Zinc Zn	Manganese Mn	Iron Fe	Copper Cu	Boron B	
			25		1.0	3.5								

COMMENTS

SOLUBLE SALTS: "High" (H or VH) levels need to be avoided if growth is not to be affected. Avoid further fertilization until this can be addressed. You may want to re-sample.
MICRONUTRIENTS: Where levels appear to be high, avoid any further applications for the time being. Very high (VH) levels may not necessarily be toxic, but avoid. Maintain correct soil pH.
YOUR SUPPLIER will recommend to you choice, rate and method of application of fertilizer materials and amendments.

"Our reports and letters are for the exclusive and confidential use of our clients, and may not be reproduced in whole or in part, nor may any reference be made to the work, the result or the company in any advertising, news release, or other public announcements without obtaining our prior written authorization." The yield of any crop is controlled by many factors in additions to nutrition. While these recommendations are based on agronomic research and experience, they DO NOT GUARANTEE the achievement of satisfactory performance. © Copyright 1994 A & L WESTERN LABORATORIES, INC.

Phoebe Gordon, PhD
A & L WESTERN LABORATORIES, INC

A & L WESTERN AGRICULTURAL LABORATORIES

1311 WOODLAND AVE #1 • MODESTO, CALIFORNIA 95351 • (209) 529-4080 • FAX (209) 529-4736

REPORT NUMBER: 16-061-067 **CLIENT NO:** 1358

SEND TO: GRO-POWER INC
15065 TELEPHONE AVENUE
CHINO, CA 91710-9614

GROWER: CONVERSE CONSULTANTS

SUBMITTED BY: VILLAGE POND PARK

Graphical Soil Analysis Report

DATE OF REPORT: 03/04/16 **LAB NO:** 50483 **SAMPLE ID:** POND3 **PAGE:** 3

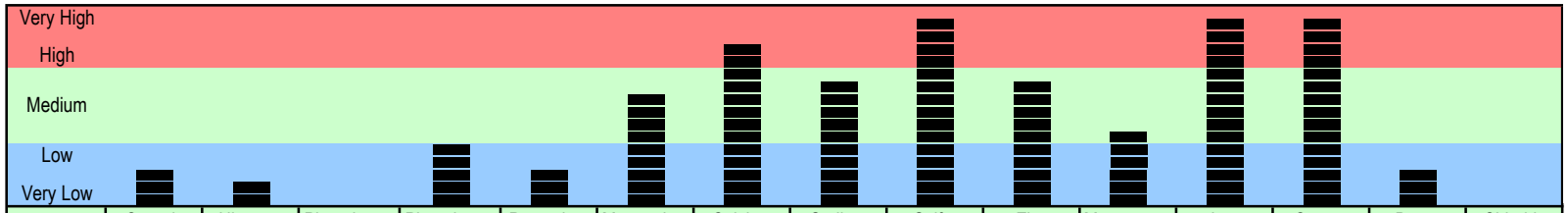

Analyte	Organic Matter %	Nitrogen NO_3-N ppm	Phosphorus Weak Bray ppm	Phosphorus $NaHCO_3$-P ppm	Potassium K ppm	Magnesium Mg ppm	Calcium Ca ppm	Sodium Na ppm	Sulfur SO_4-S ppm	Zinc Zn ppm	Manganese Mn ppm	Iron Fe ppm	Copper Cu ppm	Boron B ppm	Chloride Cl ppm
Results	1.3	3	15	7	60	258	1783	137	106	3.2	6	51	6.4	0.5	

LOW AVERAGE HIGH

Percent Cation Saturation (computed)

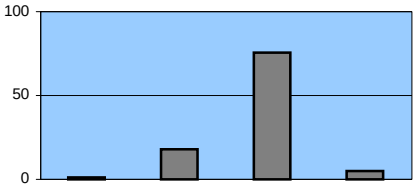

Potassium K %	Magnesium Mg %	Calcium Ca %	Sodium Na %
1.3	18.0	75.6	5.1

ACIDIC BASIC

ECe dS/m	CEC meq/100g	Ex. Lime	pH
1.7	11.8	H	8.1

INCREASING SALINITY →

← INCREASING NEED FOR LIME

Buffer pH:

Weak Bray P unreliable at M or H excess lime or pH > 7.5

Soil Fertility Guidelines

CROP: LANDSCAPE **RATE:** lb/1000 sq ft **NOTES:**

Dolomite (70 score)	Lime (70 score)	Gypsum	Elemental Sulfur	Nitrogen N	Phosphate P_2O_5	Potash K_2O	Magnesium Mg	Sulfur SO_4-S	Zinc Zn	Manganese Mn	Iron Fe	Copper Cu	Boron B	
			30	3.6	2.5	5.0								

COMMENTS

"Our reports and letters are for the exclusive and confidential use of our clients, and may not be reproduced in whole or in part, nor may any reference be made to the work, the result or the company in any advertising, news release, or other public announcements without obtaining our prior written authorization." The yield of any crop is controlled by many factors in additions to nutrition. While these recommendations are based on agronomic research and experience, they DO NOT GUARANTEE the achievement of satisfactory performance. © Copyright 1994 A & L WESTERN LABORATORIES, INC.

Phoebe Gordon, PhD
A & L WESTERN LABORATORIES, INC

A & L WESTERN AGRICULTURAL LABORATORIES

1311 WOODLAND AVE #1 • MODESTO, CALIFORNIA 95351 • (209) 529-4080 • FAX (209) 529-4736

REPORT NUMBER: 16-061-053 **CLIENT NO:** 1358

SEND TO: GRO-POWER INC
15065 TELEPHONE AVENUE
CHINO, CA 91710-9614

GROWER: CONVERSE CONSULTANTS

SUBMITTED BY: VILLAGE POND PARK

Graphical Soil Analysis Report

DATE OF REPORT: 03/04/16 **LAB NO:** 50464 **SAMPLE ID:** PARK1 **PAGE:** 1

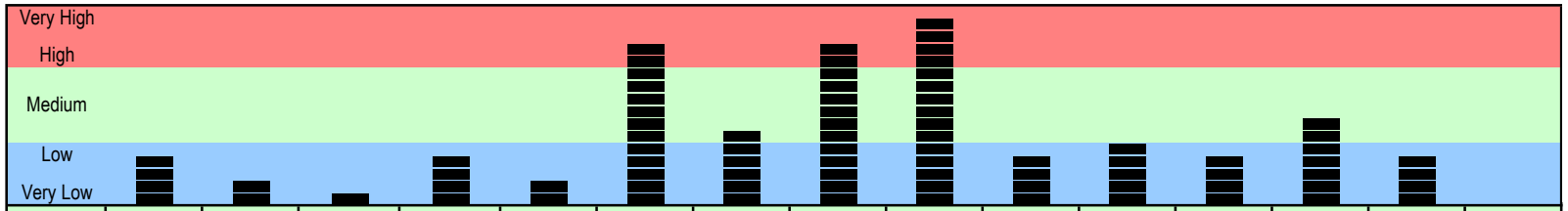

Analyte	Organic Matter %	Nitrogen NO_3-N ppm	Phosphorus Weak Bray ppm	Phosphorus $NaHCO_3$-P ppm	Potassium K ppm	Magnesium Mg ppm	Calcium Ca ppm	Sodium Na ppm	Sulfur SO_4-S ppm	Zinc Zn ppm	Manganese Mn ppm	Iron Fe ppm	Copper Cu ppm	Boron B ppm	Chloride Cl ppm
Results	1.7	4	3	6	40	435	1771	372	162	0.9	2	10	1.0	0.6	

Percent Cation Saturation (computed)

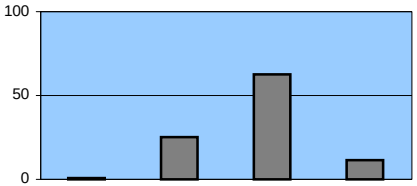

Potassium K %	Magnesium Mg %	Calcium Ca %	Sodium Na %
0.7	25.3	62.5	11.4

ACIDIC BASIC

LOW AVERAGE HIGH

ECe dS/m	CEC meq/100g	Ex. Lime	pH
1.9	14.1	L	7.5

INCREASING SALINITY →

← INCREASING NEED FOR LIME

Buffer pH:

Soil Fertility Guidelines

CROP: LANDSCAPE **RATE:** lb/1000 sq ft **NOTES:**

Dolomite (70 score)	Lime (70 score)	Gypsum	Elemental Sulfur	Nitrogen N	Phosphate P_2O_5	Potash K_2O	Magnesium Mg	Sulfur SO_4-S	Zinc Zn	Manganese Mn	Iron Fe	Copper Cu	Boron B	
		90	15	3.6	2.5	5.5			*	*				

COMMENTS

ORGANIC MATTER levels maintained above 2.0 percent will provide an improved soil structure and a more sustained release of nutrients. Follow supplier's instructions where levels are low.
SODIUM: If a concern, broadcast amendment and incorporate if possible. Follow with frequent/heavy watering to aid in the amending (but check water quality first and avoid leaching nitrates).
SOLUBLE SALTS: "High" (H or VH) levels need to be avoided if growth is not to be affected. Avoid further fertilization until this can be addressed. You may want to re-sample.
GENERAL LANDSCAPE: It is best to start fertilizing in early spring as soon as new growth begins to develop. Apply according to growth habit, avoiding applications during winter months.

"Our reports and letters are for the exclusive and confidential use of our clients, and may not be reproduced in whole or in part, nor may any reference be made to the work, the result or the company in any advertising, news release, or other public announcements without obtaining our prior written authorization." The yield of any crop is controlled by many factors in additions to nutrition. While these recommendations are based on agronomic research and experience, they DO NOT GUARANTEE the achievement of satisfactory performance. © Copyright 1994 A & L WESTERN LABORATORIES, INC.

Phoebe Gordon, PhD
A & L WESTERN LABORATORIES, INC

A & L WESTERN AGRICULTURAL LABORATORIES

1311 WOODLAND AVE #1 • MODESTO, CALIFORNIA 95351 • (209) 529-4080 • FAX (209) 529-4736

REPORT NUMBER: 16-061-053 **CLIENT NO:** 1358

SEND TO: GRO-POWER INC
15065 TELEPHONE AVENUE
CHINO, CA 91710-9614

GROWER: CONVERSE CONSULTANTS

SUBMITTED BY: VILLAGE POND PARK

Graphical Soil Analysis Report

DATE OF REPORT: 03/04/16 **LAB NO:** 50465 **SAMPLE ID:** PARK2 **PAGE:** 2

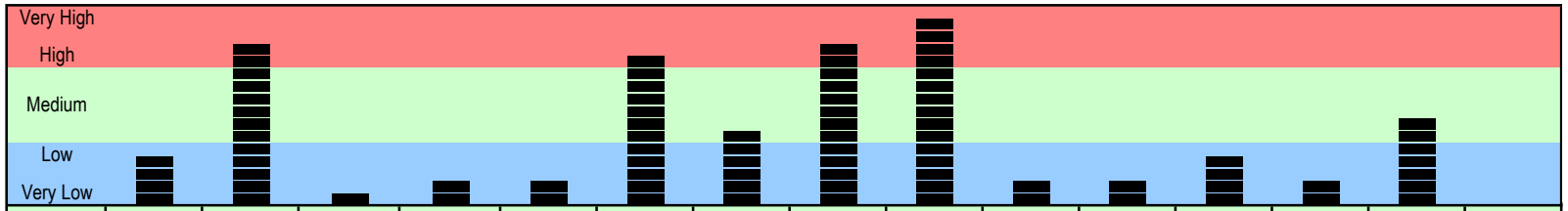

Analyte	Organic Matter %	Nitrogen NO_3-N ppm	Phosphorus Weak Bray ppm	Phosphorus $NaHCO_3$-P ppm	Potassium K ppm	Magnesium Mg ppm	Calcium Ca ppm	Sodium Na ppm	Sulfur SO_4-S ppm	Zinc Zn ppm	Manganese Mn ppm	Iron Fe ppm	Copper Cu ppm	Boron B ppm	Chloride Cl ppm
Results	1.8	54	1	4	48	592	2546	517	396	0.4	1	10	0.4	1.3	

Percent Cation Saturation (computed)

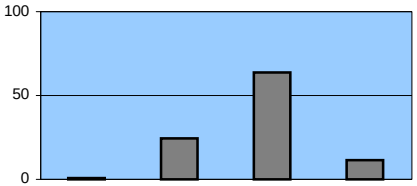

Potassium K %	Magnesium Mg %	Calcium Ca %	Sodium Na %
0.6	24.4	63.7	11.3

ACIDIC BASIC

LOW AVERAGE HIGH

3.0 **ECe** dS/m — INCREASING SALINITY →

19.9 **CEC** meq/100g

L **Ex. Lime**

7.4 **pH** — ← INCREASING NEED FOR LIME

Buffer pH:

Soil Fertility Guidelines

CROP: LANDSCAPE **RATE:** lb/1000 sq ft **NOTES:**

Dolomite (70 score)	Lime (70 score)	Gypsum	Elemental Sulfur	Nitrogen N	Phosphate P_2O_5	Potash K_2O	Magnesium Mg	Sulfur SO_4-S	Zinc Zn	Manganese Mn	Iron Fe	Copper Cu	Boron B	
		130		1.0	3.5	5.5			*	*		*		

COMMENTS

SULFATE-SULFUR: Where levels are very high (VH), ensure that adequate watering and drainage can be achieved before applying further fertilizer or amendments.
YOUR SUPPLIER will recommend to you choice, rate and method of application of fertilizer materials and amendments.

"Our reports and letters are for the exclusive and confidential use of our clients, and may not be reproduced in whole or in part, nor may any reference be made to the work, the result or the company in any advertising, news release, or other public announcements without obtaining our prior written authorization." The yield of any crop is controlled by many factors in additions to nutrition. While these recommendations are based on agronomic research and experience, they DO NOT GUARANTEE the achievement of satisfactory performance. © Copyright 1994 A & L WESTERN LABORATORIES, INC.

Phoebe Gordon, PhD
A & L WESTERN LABORATORIES, INC

A & L WESTERN AGRICULTURAL LABORATORIES

1311 WOODLAND AVE #1 • MODESTO, CALIFORNIA 95351 • (209) 529-4080 • FAX (209) 529-4736

REPORT NUMBER: 16-061-053 **CLIENT NO:** 1358

SEND TO: GRO-POWER INC
15065 TELEPHONE AVENUE
CHINO, CA 91710-9614

GROWER: CONVERSE CONSULTANTS

SUBMITTED BY: VILLAGE POND PARK

Graphical Soil Analysis Report

DATE OF REPORT: 03/04/16 **LAB NO:** 50466 **SAMPLE ID:** PARK3 **PAGE:** 3

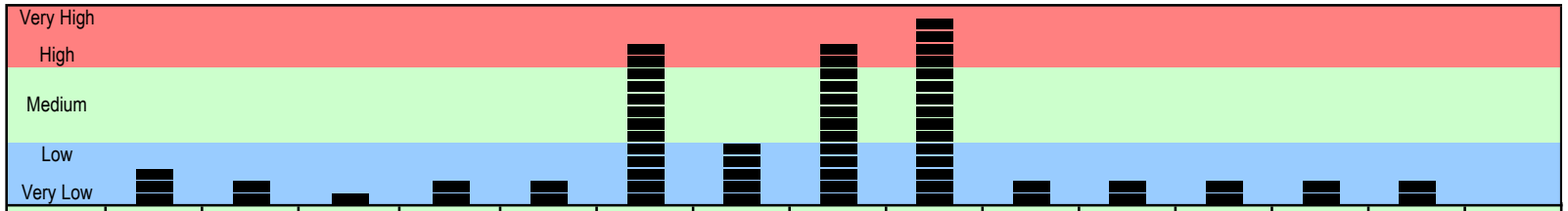

Analyte	Organic Matter %	Nitrogen NO_3-N ppm	Phosphorus Weak Bray ppm	Phosphorus $NaHCO_3$-P ppm	Potassium K ppm	Magnesium Mg ppm	Calcium Ca ppm	Sodium Na ppm	Sulfur SO_4-S ppm	Zinc Zn ppm	Manganese Mn ppm	Iron Fe ppm	Copper Cu ppm	Boron B ppm	Chloride Cl ppm
Results	1.2	4	1	3	45	400	1548	339	133	0.6	1	6	0.3	0.4	

LOW AVERAGE HIGH

Percent Cation Saturation (computed)

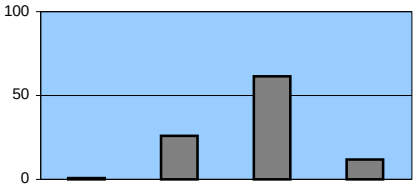

Potassium K %	Magnesium Mg %	Calcium Ca %	Sodium Na %
0.9	26.1	61.3	11.7

ACIDIC BASIC

ECe dS/m	CEC meq/100g	Ex. Lime	pH
2.5	12.6	L	7.3

INCREASING SALINITY →

← INCREASING NEED FOR LIME

Buffer pH:

Soil Fertility Guidelines

CROP: LANDSCAPE **RATE:** lb/1000 sq ft **NOTES:**

Dolomite (70 score)	Lime (70 score)	Gypsum	Elemental Sulfur	Nitrogen N	Phosphate P_2O_5	Potash K_2O	Magnesium Mg	Sulfur SO_4-S	Zinc Zn	Manganese Mn	Iron Fe	Copper Cu	Boron B	
		90		3.6	4.5	5.5			*	*	*	*		

COMMENTS

"Our reports and letters are for the exclusive and confidential use of our clients, and may not be reproduced in whole or in part, nor may any reference be made to the work, the result or the company in any advertising, news release, or other public announcements without obtaining our prior written authorization." The yield of any crop is controlled by many factors in additions to nutrition. While these recommendations are based on agronomic research and experience, they DO NOT GUARANTEE the achievement of satisfactory performance. © Copyright 1994 A & L WESTERN LABORATORIES, INC.

Phoebe Gordon, PhD
A & L WESTERN LABORATORIES, INC

INTERPRETATION OF ANALYSIS

NAME: Converse Consultants **LAB NO.: 50464 – 50466 & 50481 - 50483** **DATE: 03/04/16**

PROJECT: Village Pond Park

TEXTURES*					
[ ]	SANDY SOILS	[X]	LOAM SOILS	[ ]	CLAY SOILS
Coarse textured, low water retention, infertile; fertilizer leaches easily and needs frequent irrigation. Organic matter benefits water and nutrient retention.		Have desirable properties of clay and sand, good moisture and fertilizer retention, not too sticky or droughty.		Sticky: high water retention, slow water penetration, compacts easily; high fertilizer retention. Need organic matter to keep workable.	
Sand, Loamy Sand		Sandy Loam, Loam, Silt Loam, Silty Clay Loam, Sandy Clay Loam, Clay Loam		Sandy Clay, Silty Clay, Clay	

***Texture estimate derived from CEC value. For more precise texture information, further testing is required. Contact lab for information.**

LIME (amount of solid lime distributed in soil)		
[X]	HIGH **Pond 1, 2, 3**	Plants sensitive to "Lime-induced Iron Chlorosis", (i.e. azalea, gardenia, liquid amber, roses, etc.) must have corrective chemical added to soil.
[ ]	MODERATE	Plants sensitive to "Lime-induced Iron Chlorosis", affected but not as severely as "high" readings. Corrective chemical may be added.
[X]	LOW **Park 1, 2, 3**	Plants sensitive to "Lime-induced Iron Chlorosis", not affected. No corrective chemical needed.

pH	
7.3 - 8.1	Normal pH values for this area vary from 6.5 to 8.0, however variations in either direction may exist. Soil amendments may be recommended to help bring the soil pH into a more optimal range. To lower pH, soil sulfur or an equivalent acid-forming chemical recommended. To raise pH, lime is usually recommended.

EC			BORON (ppm)		
Electrical Conductivity of the soil saturation extract is a measure of the total salts in the soil. This can be related to plant growth as follows: (Units are mmhos/cm @ 25 degrees C)			Is expressed as ppm in the saturation extract. A small amount of boron is essential for plant growth, but a concentration slightly above the optimum is toxic for plants.		
[X]	0 – 1.9 **Park 1, Pond 3**	No damage from salts.	[X]	0.0 - .6 **Park 1, 3, Pond 3**	Not toxic for any, but may be too low for some.
[X]	2 - 3.9 **Park 2, 3, Pond 2**	Sensitive plants may be damaged.	[X]	.7 - 1.4 **Park 2, Pond 1, 2**	Sensitive plants restricted.
[X]	4 - 7.9 **Pond 1**	Many plants affected.	[ ]	1.5 - 4.9	Many plants restricted.
[ ]	8 - 16	Most plants damaged.	[ ]	5.0 - 10.0	Only tolerant plants satisfactory.
[ ]	over 16	Few plants survive.	[ ]	10.0 - over	Few plants survive.

 PROJECT: Village Pond Park **LAB NO.: 50464 – 50466 & 50481 - 50483**

PERCENT SODIUM SATURATION		
Is the degree to which the soil exchange complex is saturated with sodium. Exchangeable sodium has two effects: (1) Reduced permeability and (2) Toxicity of sensitive plants.		
[ ]	Below 5	Generally no permeability problem due to sodium. However, sodium sensitive plants may show leaf burn.
[X]	5 - 15	Possible permeability problems with clay loams and clays. (C.E.C. 15 – 30)
[ ]	Above 15	Permeability problems are likely on all mineral soil except some sands and loam sands.

NUTRIENTS						
NITROGEN (N)	[X]	LOW **Park 1, 3, Pond 3**	[ ]	MODERATE	[X]	HIGH **Park 2, Pond 1, 2**
PHOSPHORUS (P_2O_5)	[X]	LOW **Park 1, 2, 3, Pond 3**	[ ]	MODERATE	[X]	HIGH **Pond 1, 2**
POTASSIUM (K_20)	[X]	LOW **All areas**	[ ]	MODERATE	[ ]	HIGH
	Definite need for fertilizer nutrient add at recommended rate for plant soil in question		Fertilizer nutrients are present in adequate amounts; maintain at this level.		There is no need for adding fertilizer nutrients at this time.	

ORGANIC MATTER (Percent as designated on the soil analysis)*		
[ ]	VERY LOW	0.0 – 0.7
[X]	LOW **Park 1, 3, Pond 3**	0.8 – 1.7
[X]	MODERATE **Park 2**	1.8 – 3.2
[ ]	HIGH	3.3 – 4.2
[X]	VERY HIGH **Pond 1, 2**	4.3 – …….
*Variables may exist depending upon the soil type and the source of organic matter that is being measured, however the above table will give a good estimate of the percentage of organic matter present.		

WATER PERCOLATION RATE		(INCHES/HOUR)*
[ ]	VERY RAPID	MORE THAN 20.00
[ ]	RAPID	6.00 – 20.00
[ ]	MODERATELY RAPID	2.00 – 6.00
[X]	MODERATE	.60 – 2.00
[ ]	MODERATELY SLOW	.20 - .60
[ ]	SLOW	.06 - .20
[ ]	VERY SLOW	LESS THAN .06
*Variables may exist depending upon the soil type and the source of organic matter that is being measured, however the above table will give a good estimate of the percentage of organic matter present.		

Percolation rate is an estimate derived from texture. For more specific rates, further testing is required. Contact lab for information.

©2004 Gro-Power®, Inc.

APPENDIX F

ENVIRONMENTAL SOIL SAMPLING AND TESTING

APPENDIX F

ENVIRONMENTAL SOIL SAMPLING AND TESTING

F1.1 Soil Sampling Program

Three (3) soil samples were collected from the pond (Pond-1, Pond-2, and Pond -3) for environmental soil analysis. The samples were obtained at depths ranging from 8 to 10 feet below pond water surface. The approximate location of the pond soil sample areas is shown on Drawing No. 3A, *Site Topography and Soft Bottom*.

Soil samples were collected using a 4-inch diameter hand auger and placed in 4-ounce glass jars. A subsample was collected from each primary sample in general accordance with EPA Method 5035 using EnCore sample containers for the analysis of VOCs and in 4-ounce glass jars for the analysis for Title 22 CAM metals.

The sample containers were sealed, labeled and placed on ice for transport, under chain of custody documentation, to a State of California certified laboratory.

F1.2 Chemical Analytical Methods

All soil samples were submitted to American Environmental Testing Laboratories (AETL) in Burbank, California. Selected soil samples were analyzed in accordance with the following EPA Test Methods:

- EPA Test Method 8260B for Volatile organic compounds (VOCs)
- EPA Test Methods 6010B and 7471A for Title 22 CAM metals

F1.3 Analytical Results

VOCs and Title 22 CAM metals were reported as not detected at or above the method detection limit in all of the samples submitted for analysis.

The analytical report from the laboratory follows at the end of Appendix F, *Environmental Soil Sampling and Testing*.

Copyright 2016 Converse Consultants

American Environmental Testing Laboratory Inc.
2834 & 2908 North Naomi Street Burbank, CA 91504 • DOHS NO: 1541, LACSD NO: 10181
Tel: (888) 288-AETL • (818) 845-8200 • Fax: (818) 845-8840 • www.aetlab.com

Ordered By

Converse Consultants
717 S Myrtle Ave
Monrovia, CA 91016-

Telephone: (626)930-1200
Attention: Mohammad Malim

Number of Pages 8
Date Received 02/11/2016
Date Reported 02/15/2016

Job Number	Order Date	Client
80124	02/11/2016	CONVRS

Project ID: 15-32-162-01
Project Name: Village Pond Park

Enclosed please find results of analyses of 3 soil samples which were analyzed as specified on the attached chain of custody. If there are any questions, please do not hesitate to call.

Checked By: _____ Approved By: C. Razmara

Cyrus Razmara, Ph.D.
Laboratory Director

American Environmental Testing Laboratory Inc.
2834 & 2908 North Naomi Street Burbank, CA 91504 • DOHS NO: 1541, LACSD NO: 10181
Tel: (888) 288-AETL • (818) 845-8200 • Fax: (818) 845-8840 • www.aetlab.com

Ordered By

Converse Consultants
717 S Myrtle Ave
Monrovia, CA 91016-

Project ID: 15-32-162-01
Date Received 02/11/2016
Date Reported 02/15/2016

Telephone: (626)930-1200
Attention: Mohammad Malim

Job Number	Order Date	Client
80124	02/11/2016	CONVRS

CERTIFICATE OF ANALYSIS
CASE NARRATIVE

AETL received 3 samples with the following specification on 02/11/2016.

Lab ID	Sample ID	Sample Date	Matrix	Quantity Of Containers
80124.01	Pond 1	02/10/2016	Soil	3
80124.02	Pond 2	02/10/2016	Soil	3
80124.03	Pond 3	02/10/2016	Soil	3

Method ^ Submethod	Req Date	Priority	TAT	Units
(6010B/7000CAM)	02/18/2016	2	Normal	mg/Kg
(8260B)	02/18/2016	2	Normal	ug/Kg

The samples were analyzed as specified on the enclosed chain of custody. Analytical non-conformances have been noted on the report.

Unless otherwise noted, all results of soil and solid samples are based on wet weight.

Checked By: _____ Approved By: C. Razmara

Cyrus Razmara, Ph.D.
Laboratory Director

American Environmental Testing Laboratory Inc.

2834 & 2908 North Naomi Street Burbank, CA 91504 • DOHS NO: 1541, LACSD NO: 10181
Tel: (888) 288-AETL • (818) 845-8200 • Fax: (818) 845-8840 • www.aetlab.com

ANALYTICAL RESULTS

Ordered By

Converse Consultants
717 S Myrtle Ave
Monrovia, CA 91016-

Telephone: (626)930-1200
Attn: Mohammad Malim
Page: 2

Project ID: 15-32-162-01
Project Name: Village Pond Park

AETL Job Number	Submitted	Client
80124	02/11/2016	CONVRS

Method: (8260B), Volatile Organic Compounds by GC/MS (SW846)

QC Batch No: 0212162A1

Our Lab I.D.			Method Blank	**80124.01**	**80124.02**	**80124.03**	
Client Sample I.D.				Pond 1	Pond 2	Pond 3	
Date Sampled				02/10/2016	02/10/2016	02/10/2016	
Date Prepared			02/12/2016	02/12/2016	02/12/2016	02/12/2016	
Preparation Method			5030	5035A	5035A	5035A	
Date Analyzed			02/12/2016	02/12/2016	02/12/2016	02/12/2016	
Matrix			Soil	Soil	Soil	Soil	
Units			ug/Kg	ug/Kg	ug/Kg	ug/Kg	
Dilution Factor			1	1	1	1	
Analytes	**MDL**	**PQL**	**Results**	**Results**	**Results**	**Results**	
Acetone	25	50	ND	ND	ND	ND	
Benzene	1.0	10.0	ND	ND	ND	ND	
Bromobenzene (Phenyl bromide)	5.0	10.0	ND	ND	ND	ND	
Bromochloromethane	5.0	10.0	ND	ND	ND	ND	
Bromodichloromethane	5.0	10.0	ND	ND	ND	ND	
Bromoform (Tribromomethane)	25	50	ND	ND	ND	ND	
Bromomethane (Methyl bromide)	15	30	ND	ND	ND	ND	
2-Butanone (MEK)	25	50	ND	ND	ND	ND	
n-Butylbenzene	5.0	10.0	ND	ND	ND	ND	
sec-Butylbenzene	5.0	10.0	ND	ND	ND	ND	
tert-Butylbenzene	5.0	10.0	ND	ND	ND	ND	
Carbon Disulfide	25	50	ND	ND	ND	ND	
Carbon tetrachloride	5.0	10.0	ND	ND	ND	ND	
Chlorobenzene	5.0	10.0	ND	ND	ND	ND	
Chloroethane	15	30	ND	ND	ND	ND	
2-Chloroethyl vinyl ether	50	50	ND	ND	ND	ND	
Chloroform (Trichloromethane)	5.0	10.0	ND	ND	ND	ND	
Chloromethane (Methyl chloride)	15	30	ND	ND	ND	ND	
2-Chlorotoluene	5.0	10.0	ND	ND	ND	ND	
4-Chlorotoluene	5.0	10.0	ND	ND	ND	ND	
1,2-Dibromo-3-chloropropane (DBCP)	25	50	ND	ND	ND	ND	
Dibromochloromethane	5.0	10.0	ND	ND	ND	ND	
1,2-Dibromoethane (EDB)	5.0	10.0	ND	ND	ND	ND	
Dibromomethane	5.0	10.0	ND	ND	ND	ND	
1,2-Dichlorobenzene	5.0	10.0	ND	ND	ND	ND	
1,3-Dichlorobenzene	5.0	10.0	ND	ND	ND	ND	
1,4-Dichlorobenzene	5.0	10.0	ND	ND	ND	ND	
Dichlorodifluoromethane	15	30	ND	ND	ND	ND	

American Environmental Testing Laboratory Inc.
2834 & 2908 North Naomi Street Burbank, CA 91504 • DOHS NO: 1541, LACSD NO: 10181
Tel: (888) 288-AETL • (818) 845-8200 • Fax: (818) 845-8840 • www.aetlab.com

ANALYTICAL RESULTS

Project ID: 15-32-162-01
Project Name: Village Pond Park

AETL Job Number	Submitted	Client
80124	02/11/2016	CONVRS

Method: (8260B), Volatile Organic Compounds by GC/MS (SW846)

QC Batch No: 0212162A1

Our Lab I.D.			Method Blank	**80124.01**	**80124.02**	**80124.03**	
Client Sample I.D.				Pond 1	Pond 2	Pond 3	
Date Sampled				02/10/2016	02/10/2016	02/10/2016	
Date Prepared			02/12/2016	02/12/2016	02/12/2016	02/12/2016	
Preparation Method			5030	5035A	5035A	5035A	
Date Analyzed			02/12/2016	02/12/2016	02/12/2016	02/12/2016	
Matrix			Soil	Soil	Soil	Soil	
Units			ug/Kg	ug/Kg	ug/Kg	ug/Kg	
Dilution Factor			1	1	1	1	
Analytes	**MDL**	**PQL**	**Results**	**Results**	**Results**	**Results**	
1,1-Dichloroethane	5.0	10.0	ND	ND	ND	ND	
1,2-Dichloroethane (EDC)	5.0	10.0	ND	ND	ND	ND	
1,1-Dichloroethene	5.0	10.0	ND	ND	ND	ND	
cis-1,2-Dichloroethene	5.0	10.0	ND	ND	ND	ND	
trans-1,2-Dichloroethene	5.0	10.0	ND	ND	ND	ND	
1,2-Dichloropropane	5.0	10.0	ND	ND	ND	ND	
1,3-Dichloropropane	5.0	10.0	ND	ND	ND	ND	
2,2-Dichloropropane	5.0	10.0	ND	ND	ND	ND	
1,1-Dichloropropene	5.0	10.0	ND	ND	ND	ND	
cis-1,3-Dichloropropene	5.0	10.0	ND	ND	ND	ND	
trans-1,3-Dichloropropene	5.0	10.0	ND	ND	ND	ND	
Ethylbenzene	1.0	10.0	ND	ND	ND	ND	
Hexachlorobutadiene	15	30	ND	ND	ND	ND	
2-Hexanone	25	50	ND	ND	ND	ND	
Iodomethane	5.0	10.0	ND	ND	ND	ND	
Isopropylbenzene	5.0	10.0	ND	ND	ND	ND	
p-Isopropyltoluene	5.0	10.0	ND	ND	ND	ND	
4-Methyl-2-pentanone (MIBK)	25	50	ND	ND	ND	ND	
Methyl-tert-butyl ether (MTBE)	2.0	10.0	ND	ND	ND	ND	
Methylene chloride (DCM)	25	50	ND	ND	ND	ND	
Naphthalene	5.0	10.0	ND	ND	ND	ND	
n-Propylbenzene	5.0	10.0	ND	ND	ND	ND	
Styrene	5.0	10.0	ND	ND	ND	ND	
1,1,1,2-Tetrachloroethane	5.0	10.0	ND	ND	ND	ND	
1,1,2,2-Tetrachloroethane	5.0	10.0	ND	ND	ND	ND	
Tetrachloroethene	2.0	10.0	ND	ND	ND	ND	
Toluene (Methyl benzene)	1.0	10.0	ND	ND	ND	ND	
1,2,3-Trichlorobenzene	5.0	10.0	ND	ND	ND	ND	
1,2,4-Trichlorobenzene	5.0	10.0	ND	ND	ND	ND	
1,1,1-Trichloroethane	5.0	10.0	ND	ND	ND	ND	
1,1,2-Trichloroethane	5.0	10.0	ND	ND	ND	ND	
Trichloroethene	1.5	10.0	ND	ND	ND	ND	
Trichlorofluoromethane	5.0	10.0	ND	ND	ND	ND	
1,2,3-Trichloropropane	5.0	10.0	ND	ND	ND	ND	

American Environmental Testing Laboratory Inc.
2834 & 2908 North Naomi Street Burbank, CA 91504 • DOHS NO: 1541, LACSD NO: 10181
Tel: (888) 288-AETL • (818) 845-8200 • Fax: (818) 845-8840 • www.aetlab.com

ANALYTICAL RESULTS

Project ID: 15-32-162-01
Project Name: Village Pond Park

AETL Job Number	Submitted	Client
80124	02/11/2016	CONVRS

Method: (8260B), Volatile Organic Compounds by GC/MS (SW846)

QC Batch No: 0212162A1

Our Lab I.D.			Method Blank	**80124.01**	**80124.02**	**80124.03**	
Client Sample I.D.				Pond 1	Pond 2	Pond 3	
Date Sampled				02/10/2016	02/10/2016	02/10/2016	
Date Prepared			02/12/2016	02/12/2016	02/12/2016	02/12/2016	
Preparation Method			5030	5035A	5035A	5035A	
Date Analyzed			02/12/2016	02/12/2016	02/12/2016	02/12/2016	
Matrix			Soil	Soil	Soil	Soil	
Units			ug/Kg	ug/Kg	ug/Kg	ug/Kg	
Dilution Factor			1	1	1	1	
Analytes	**MDL**	**PQL**	**Results**	**Results**	**Results**	**Results**	
1,2,4-Trimethylbenzene	5.0	10.0	ND	ND	ND	ND	
1,3,5-Trimethylbenzene	5.0	10.0	ND	ND	ND	ND	
Vinyl Acetate	25	50	ND	ND	ND	ND	
Vinyl chloride (Chloroethene)	5.0	10.0	ND	ND	ND	ND	
o-Xylene	1.0	10.0	ND	ND	ND	ND	
m,p-Xylenes	1.0	20.0	ND	ND	ND	ND	
Our Lab I.D.			Method Blank	**80124.01**	**80124.02**	**80124.03**	
Surrogates	**%Rec.Limit**		**% Rec.**	**% Rec.**	**% Rec.**	**% Rec.**	
Bromofluorobenzene	75-125		94.5	99.0	98.4	99.1	
Dibromofluoromethane	75-125		120	116	117	115	
Toluene-d8	75-125		97.4	99.0	98.8	98.0	

American Environmental Testing Laboratory Inc.
2834 & 2908 North Naomi Street Burbank, CA 91504 • DOHS NO: 1541, LACSD NO: 10181
Tel: (888) 288-AETL • (818) 845-8200 • Fax: (818) 845-8840 • www.aetlab.com

ANALYTICAL RESULTS

Ordered By

Converse Consultants
717 S Myrtle Ave
Monrovia, CA 91016-

Telephone: (626)930-1200
Attn: Mohammad Malim
Page: 5

Project ID: 15-32-162-01
Project Name: Village Pond Park

AETL Job Number	Submitted	Client
80124	02/11/2016	CONVRS

Method: (6010B/7000CAM), Title 22 Metals (SW-846)

QC Batch No: 0211162C3

Our Lab I.D.			Method Blank	**80124.01**	**80124.02**	**80124.03**	
Client Sample I.D.				Pond 1	Pond 2	Pond 3	
Date Sampled				02/10/2016	02/10/2016	02/10/2016	
Date Prepared			02/11/2016	02/11/2016	02/11/2016	02/11/2016	
Preparation Method			3050B	3050B	3050B	3050B	
Date Analyzed			02/12/2016	02/12/2016	02/12/2016	02/12/2016	
Matrix			Soil	Soil	Soil	Soil	
Units			mg/Kg	mg/Kg	mg/Kg	mg/Kg	
Dilution Factor			1	1	1	1	
Analytes	**MDL**	**PQL**	**Results**	**Results**	**Results**	**Results**	
Antimony	1.0	5.0	ND	ND	ND	ND	
Arsenic	1.0	5.0	ND	ND	ND	ND	
Barium	2.5	5.0	ND	48.9	39.2	20.7	
Beryllium	1.3	2.5	ND	ND	ND	ND	
Cadmium	1.3	2.5	ND	ND	ND	ND	
Chromium	2.5	5.0	ND	5.27	4.62J	ND	
Cobalt	2.5	5.0	ND	ND	ND	ND	
Copper	2.5	5.0	ND	310	239	65.8	
Lead	2.5	5.0	ND	6.49	5.54	3.57J	
Mercury (By EPA 7471)	0.1	0.2	ND	ND	ND	ND	
Molybdenum	2.5	5.0	ND	ND	ND	ND	
Nickel	2.5	5.0	ND	3.59J	3.00J	ND	
Selenium	1.0	5.0	ND	ND	ND	ND	
Silver	2.5	5.0	ND	ND	ND	ND	
Thallium	1.0	5.0	ND	ND	ND	ND	
Vanadium	2.5	5.0	ND	12.1	10.4	6.11	
Zinc	2.5	5.0	ND	32.5	27.7	15.0	

American Environmental Testing Laboratory Inc.
2834 & 2908 North Naomi Street Burbank, CA 91504 • DOHS NO: 1541, LACSD NO: 10181
Tel: (888) 288-AETL • (818) 845-8200 • Fax: (818) 845-8840 • www.aetlab.com

QUALITY CONTROL RESULTS

Ordered By

Converse Consultants
717 S Myrtle Ave
Monrovia, CA 91016-

Telephone: (626)930-1200
Attn: Mohammad Malim
Page: 6

Project ID: 15-32-162-01
Project Name: Village Pond Park

AETL Job Number	Submitted	Client
80124	02/11/2016	CONVRS

Method: (6010B/7000CAM), Title 22 Metals (SW-846)

QC Batch No: 0211162C3; Dup or Spiked Sample: 80105.04; LCS: Clean Sand; QC Prepared: 02/11/2016; QC Analyzed: 02/12/2016; Units: mg/Kg

Analytes	Sample Result	MS Concen	MS Recov	MS % REC	MS DUP Concen	MS DUP Recov	MS DUP % REC	RPD %	MS/MSD % Limit	MS RPD % Limit
Antimony	0.00	50.0	46.9	93.8	50.0	46.6	93.2	<1	75-125	<15
Arsenic	2.57	50.0	49.6	94.1	50.0	49.1	93.1	1.07	75-125	<15
Barium	109	50.0	151	84.0	50.0	151	84.0	<1	75-125	<15
Beryllium	0.00	50.0	52.0	104	50.0	52.0	104	<1	75-125	<15
Cadmium	0.00	50.0	45.0	90.0	50.0	45.1	90.2	<1	75-125	<15
Chromium	20.2	50.0	68.8	97.2	50.0	69.1	97.8	<1	75-125	<15
Cobalt	8.74	50.0	54.2	90.9	50.0	54.4	91.3	<1	75-125	<15
Copper	20.9	50.0	72.4	103	50.0	72.9	104	<1	75-125	<15
Lead	5.86	50.0	46.4	81.1	50.0	46.3	80.9	<1	75-125	<15
Mercury (By EPA 7471)	0.00	0.500	0.655#	131	0.500	0.635#	127	3.1	75-125	<15
Molybdenum	0.00	50.0	46.1	92.2	50.0	46.3	92.6	<1	75-125	<15
Nickel	15.8	50.0	57.9	84.2	50.0	58.0	84.4	<1	75-125	<15
Selenium	0.00	50.0	48.8	97.6	50.0	49.3	98.6	1.02	75-125	<15
Silver	0.00	50.0	43.5	87.0	50.0	43.6	87.2	<1	75-125	<15
Thallium	0.00	50.0	36.0 #	72.0	50.0	36.2 #	72.4	<1	75-125	<15
Vanadium	35.1	50.0	84.1	98.0	50.0	84.3	98.4	<1	75-125	<15
Zinc	95.9	50.0	107 #	22.2	50.0	107 #	22.2	<1	75-125	<15

QC Batch No: 0211162C3; Dup or Spiked Sample: 80105.04; LCS: Clean Sand; QC Prepared: 02/11/2016; QC Analyzed: 02/12/2016; Units: mg/Kg

Analytes	LCS Concen	LCS Recov	LCS % REC	LCS DUP Concen	LCS DUP Recov	LCS DUP % REC	LCS RPD % REC	LCS/LCSD % Limit	LCS RPD % Limit	
Antimony	50.0	49.0	98.0	50.0	48.9	97.8	<1	75-125	<15	
Arsenic	50.0	48.5	97.0	50.0	48.7	97.4	<1	75-125	<15	
Barium	50.0	51.9	104	50.0	52.1	104	<1	75-125	<15	
Beryllium	50.0	55.5	111	50.0	55.8	112	<1	75-125	<15	
Cadmium	50.0	49.1	98.2	50.0	49.5	99.0	<1	75-125	<15	
Chromium	50.0	52.7	105	50.0	53.0	106	<1	75-125	<15	
Cobalt	50.0	51.2	102	50.0	51.6	103	<1	75-125	<15	
Copper	50.0	54.6	109	50.0	54.8	110	<1	75-125	<15	
Lead	50.0	47.8	95.6	50.0	47.9	95.8	<1	75-125	<15	

American Environmental Testing Laboratory Inc.
2834 & 2908 North Naomi Street Burbank, CA 91504 • DOHS NO: 1541, LACSD NO: 10181
Tel: (888) 288-AETL • (818) 845-8200 • Fax: (818) 845-8840 • www.aetlab.com

QUALITY CONTROL RESULTS

Project ID: 15-32-162-01
Project Name: Village Pond Park

AETL Job Number	Submitted	Client
80124	02/11/2016	CONVRS

Method: (6010B/7000CAM), Title 22 Metals (SW-846)

QC Batch No: 0211162C3; Dup or Spiked Sample: 80105.04; LCS: Clean Sand; QC Prepared: 02/11/2016; QC Analyzed: 02/12/2016; Units: mg/Kg

Analytes	LCS Concen	LCS Recov	LCS % REC	LCS DUP Concen	LCS DUP Recov	LCS DUP % REC	LCS RPD % REC	LCS/LCSD % Limit	LCS RPD % Limit	
Mercury (By EPA 7471)	0.500	0.487	97.4	0.500	0.488	97.5	<1	75-125	<15	
Molybdenum	50.0	52.7	105	50.0	52.8	106	<1	75-125	<15	
Nickel	50.0	49.6	99.2	50.0	50.0	100	<1	75-125	<15	
Selenium	50.0	47.8	95.6	50.0	48.2	96.4	<1	75-125	<15	
Silver	50.0	48.3	96.6	50.0	48.6	97.2	<1	75-125	<15	
Thallium	50.0	49.4	98.8	50.0	49.5	99.0	<1	75-125	<15	
Vanadium	50.0	53.6	107	50.0	53.9	108	<1	75-125	<15	
Zinc	50.0	49.9	99.8	50.0	50.1	100	<1	75-125	<15	

American Environmental Testing Laboratory Inc.

2834 & 2908 North Naomi Street Burbank, CA 91504 • DOHS NO: 1541, LACSD NO: 10181
Tel: (888) 288-AETL • (818) 845-8200 • Fax: (818) 845-8840 • www.aetlab.com

QUALITY CONTROL RESULTS

Ordered By

Converse Consultants
717 S Myrtle Ave
Monrovia, CA 91016-

Telephone: (626)930-1200
Attn: Mohammad Malim
Page: 8

Project ID: 15-32-162-01
Project Name: Village Pond Park

AETL Job Number	Submitted	Client
80124	02/11/2016	CONVRS

Method: (8260B), Volatile Organic Compounds by GC/MS (SW846)

QC Batch No: 0212162A1; Dup or Spiked Sample: 4417.01; LCS: Clean Sand; QC Prepared: 02/12/2016;MS Analyzed: 02/13/2016; LCS Analyzed: 02/12/2016; Units: ug/Kg

Analytes	Sample Result	MS Concen	MS Recov	MS % REC	MS DUP Concen	MS DUP Recov	MS DUP % REC	RPD %	MS/MSD % Limit	MS RPD % Limit
Benzene	0.00	50.0	43.1	86.2	50.0	44.6	89.2	3.42	75-125	<20
Chlorobenzene	0.00	50.0	41.9	83.8	50.0	42.9	85.8	2.36	75-125	<20
1,1-Dichloroethene	0.00	50.0	37.2 #	74.4	50.0	40.0	80.0	7.25	75-125	<20
Methyl-tert-butyl ether (MTBE)	0.00	50.0	40.6	81.2	50.0	42.0	84.0	3.39	75-125	<20
Toluene (Methyl benzene)	0.00	50.0	39.8	79.6	50.0	40.4	80.8	1.50	75-125	<20
Trichloroethene	0.00	50.0	47.6	95.2	50.0	45.4	90.8	4.73	75-125	<20
Surrogates										
Bromofluorobenzene	0.00	50.0	48.9	97.8	50.0	46.7	93.3	4.60	75-125	<20
Dibromofluoromethane	0.00	50.0	50.5	101	50.0	51.5	103	1.98	75-125	<20
Toluene-d8	0.00	50.0	46.8	93.6	50.0	47.6	95.1	1.60	75-125	<20

QC Batch No: 0212162A1; Dup or Spiked Sample: 4417.01; LCS: Clean Sand; QC Prepared: 02/12/2016;MS Analyzed: 02/13/2016; LCS Analyzed: 02/12/2016; Units: ug/Kg

Analytes	LCS Concen	LCS Recov	LCS % REC	LCS DUP Concen	LCS DUP Recov	LCS DUP % REC	LCS RPD % REC	LCS/LCSD % Limit	LCS RPD % Limit	
Benzene	50.0	49.2	98.4	50.0	48.6	97.0	1.43	75-125	<20	
Chlorobenzene	50.0	49.0	98.0	50.0	48.6	97.0	1.03	75-125	<20	
1,1-Dichloroethene	50.0	42.0	84.0	50.0	44.2	88.0	4.65	75-125	<20	
Methyl-tert-butyl ether (MTBE)	50.0	52.8	106	50.0	53.6	107	<1	75-125	<20	
Toluene (Methyl benzene)	50.0	45.6	91.2	50.0	45.1	90.0	1.32	75-125	<20	
Trichloroethene	50.0	49.0	98.0	50.0	50.4	101	3.02	75-125	<20	
LCS										
Chloroform (Trichloromethane)	50.0	48.9	97.8	50.0	49.1	98.0	<1	75-125	<20	
Ethylbenzene	50.0	46.2	92.4	50.0	45.5	91.0	1.53	75-125	<20	
1,1,1-Trichloroethane	50.0	51.3	103	50.0	50.4	101	1.96	75-125	<20	
o-Xylene	50.0	46.8	93.6	50.0	46.8	94.0	<1	75-125	<20	
m,p-Xylenes	100	92.4	92.4	100	91.5	91.5	<1	75-125	<20	
Surrogates										
Bromofluorobenzene	50.0	46.9	93.8	50.0	46.9	93.8	<1	75-125	<20	
Dibromofluoromethane	50.0	44.0	88.0	50.0	44.6	89.3	1.48	75-125	<20	
Toluene-d8	50.0	47.2	94.4	50.0	46.5	92.9	1.59	75-125	<20	

American Environmental Testing Laboratory Inc.
2834 & 2908 North Naomi Street, Burbank, CA 91504 • DOHS NO: 1541, LACSD NO: 10181
Tel: (888) 288-AETL • (818) 845-8200 • Fax: (818) 845-8840 • www.aetlab.com

Data Qualifiers and Descriptors

Data Qualifier:

#:	Recovery is not within acceptable control limits.
*:	In the QC section, sample results have been taken directly from the ICP reading. No preparation factor has been applied.
B:	Analyte was present in the Method Blank.
D:	Result is from a diluted analysis.
E:	Result is beyond calibration limits and is estimated.
H:	Analysis was performed over the allowed holding time due to circumstances which were beyond laboratory control.
J:	Analyte was detected . However, the analyte concentration is an estimated value, which is between the Method Detection Limit (MDL) and the Practical Quantitation Limit (PQL).
M:	Matrix spike recovery is outside control limits due to matrix interference. Laboratory Control Sample recovery was acceptable.
MCL:	Maximum Contaminant Level
NS:	No Standard Available
S6:	Surrogate recovery is outside control limits due to matrix interference.
S8:	The analysis of the sample required a dilution such that the surrogate concentration was diluted below the method acceptance criteria.
X:	Results represent LCS and LCSD data.

Definition:

%Limi:	Percent acceptable limits.
%REC:	Percent recovery.
Con.L:	Acceptable Control Limits
Conce:	Added concentration to the sample.
LCS:	Laboratory Control Sample
MDL:	Method Detection Limit is a statistically derived number which is specific for each instrument, each method, and each compound. It indicates a distinctively detectable quantity with 99% probability.

American Environmental Testing Laboratory Inc.
2834 & 2908 North Naomi Street, Burbank, CA 91504 • DOHS NO: 1541, LACSD NO: 10181
Tel: (888) 288-AETL • (818) 845-8200 • Fax: (818) 845-8840 • www.aetlab.com

Data Qualifiers and Descriptors

MS:	Matrix Spike
MS DU:	Matrix Spike Duplicate
ND:	Analyte was not detected in the sample at or above MDL.
PQL:	Practical Quantitation Limit or ML (Minimum Level as per RWQCB) is the minimum concentration that can be quantified with more than 99% confidence. Taking into account all aspects of the entire analytical instrumentation and practice.
Recov:	Recovered concentration in the sample.
RPD:	Relative Percent Difference

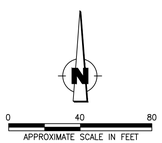

EXPLANATION

Pond-3 APPROXIMATE LOCATION OF POND BOTTOM SOIL SAMPLE

ELEVATION OF LAKE BOTTOM (SOFT)

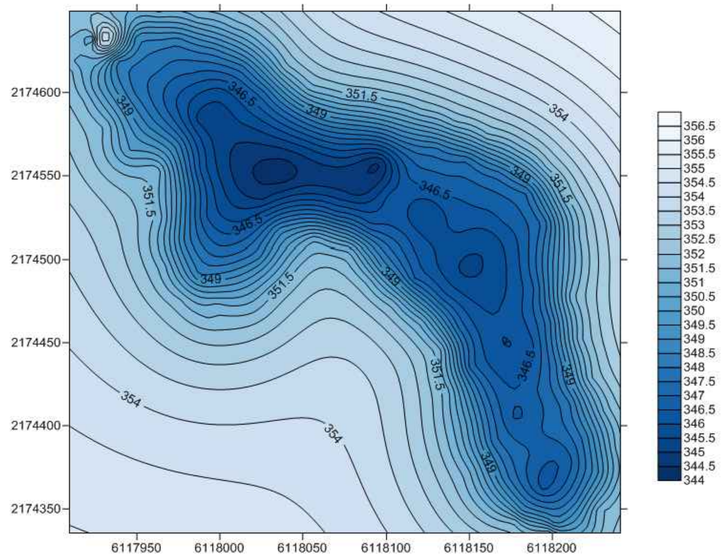

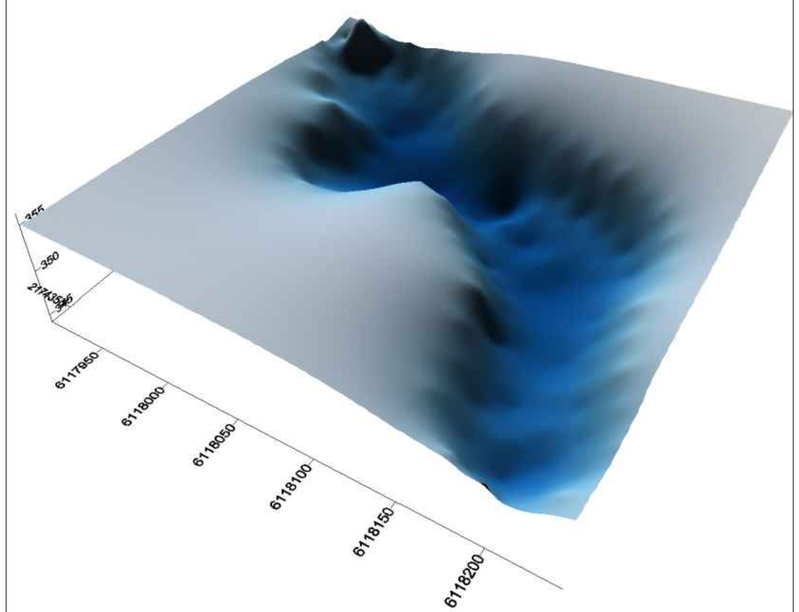

SITE TOPOGRAPHY AND SOFT BOTTOM

VILLAGE POND PARK
23102 RIDGE ROUTE DRIVE
LAKE FOREST, CALIFORNIA
FOR: CITY OF LAKE FOREST

Date MAY 2016

Project No. 15-32-162-01

Drawing No. 3A

Converse Consultants

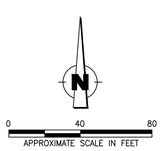

ELEVATION OF LAKE BOTTOM (FIRM)

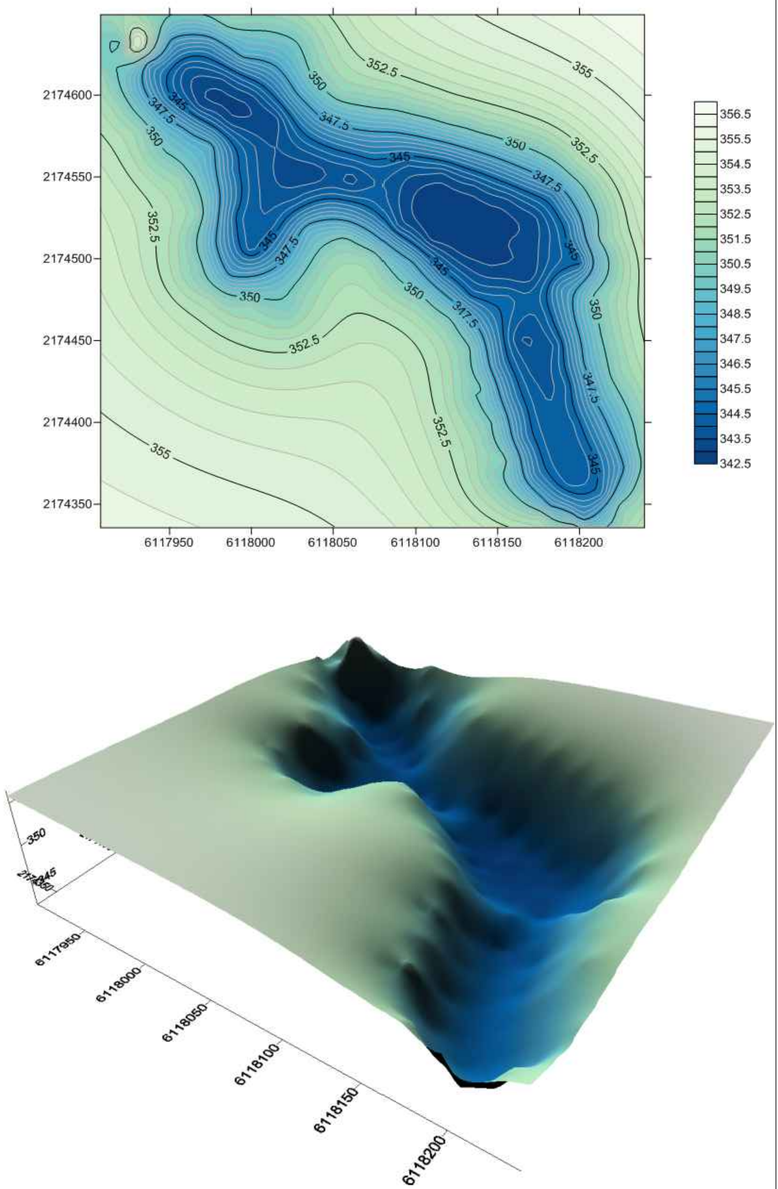

SITE TOPOGRAPHY AND FIRM BOTTOM

VILLAGE POND PARK
23102 RIDGE ROUTE DRIVE
LAKE FOREST, CALIFORNIA
FOR: CITY OF LAKE FOREST

Date MAR. 2016

Project No. 15-32-162-01

Drawing No. 3B

Converse Consultants

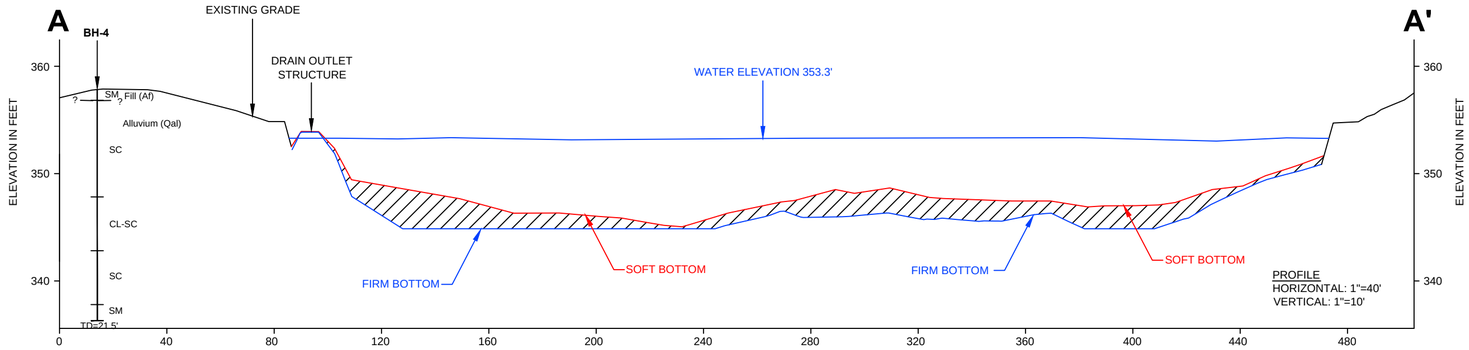

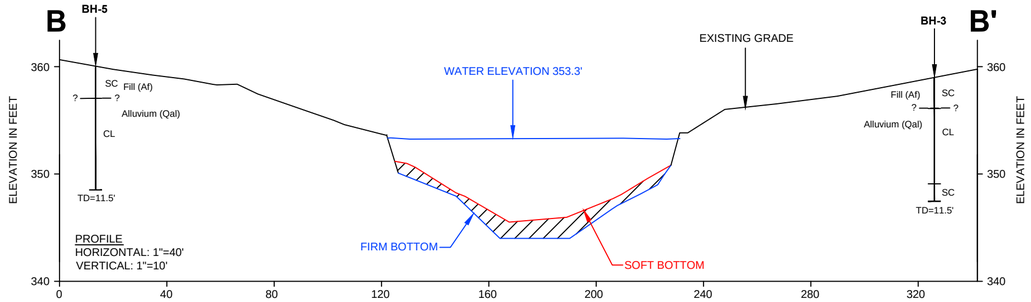

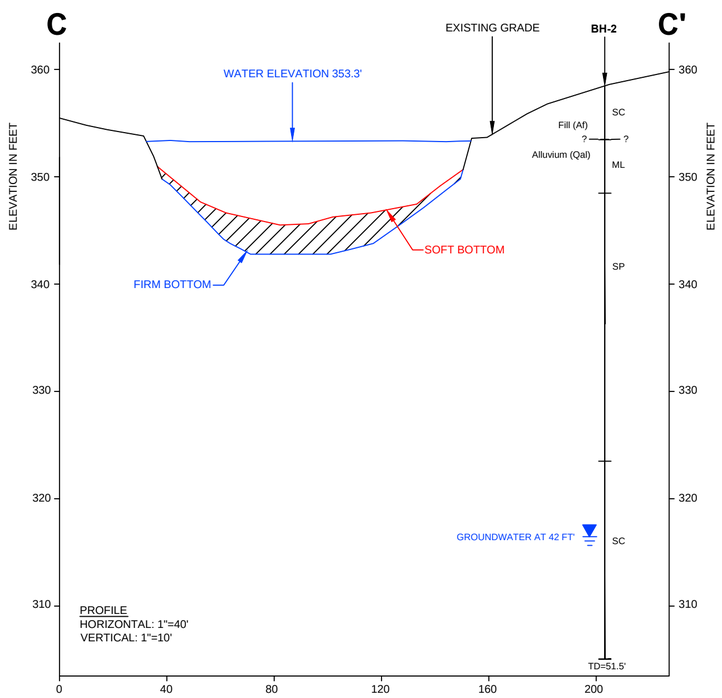

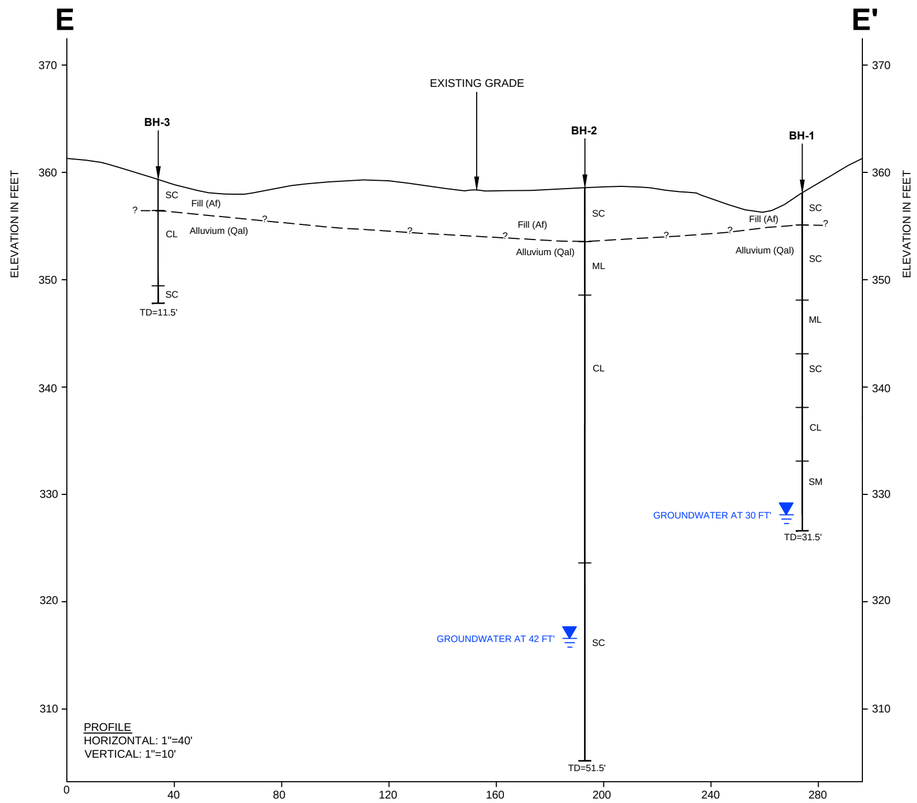

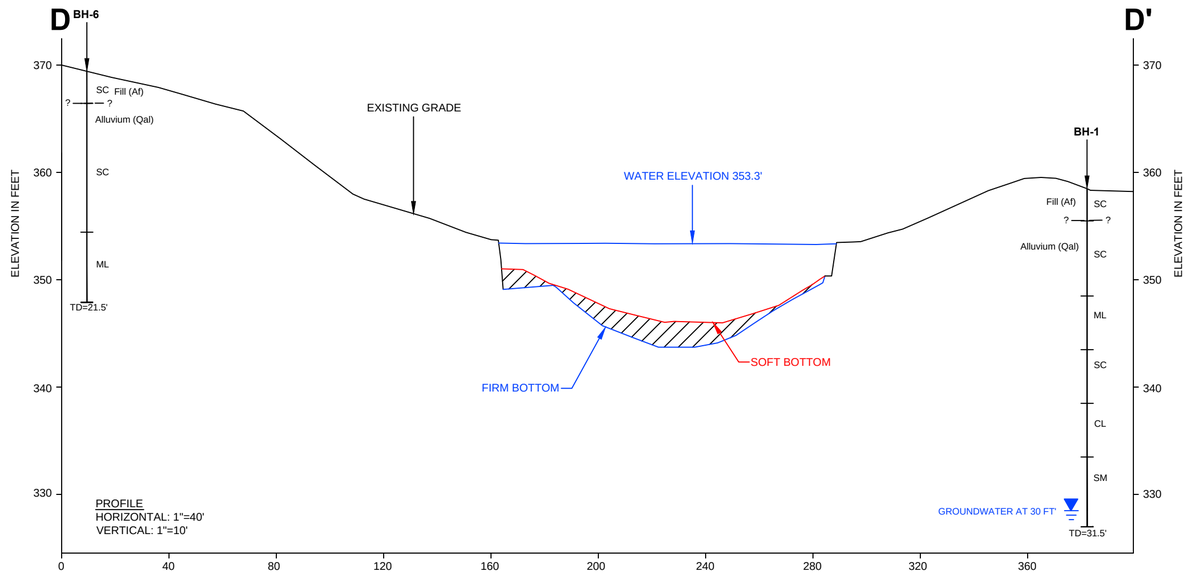

GEOLOGIC CROSS SECTIONS A-A', B-B', C-C', D-D' AND E-E'

VILLAGE POND PARK
23102 RIDGE ROUTE DRIVE
LAKE FOREST, CALIFORNIA
FOR: CITY OF LAKE FOREST

Date: MAR. 2016

Project No. 15-32-162-01

Drawing No. 5

Converse Consultants

I:\ACADDRAWINGS\15\32\162\GEOTECHREPORT\15-32-162-01_PROPOSED-SITEPLAN.DWG

APPENDIX K
INSURANCE REQUIREMENTS

APPENDIX
INSURANCE REQUIREMENTS

[**CITY'S RISK MANAGER TO REVIEW INSURANCE PROVISIONS**]

1. WORKERS' COMPENSATION AND EMPLOYER'S LIABILITY INSURANCE

Contractor shall maintain Workers' Compensation Insurance (Statutory Limits) and Employer's Liability Insurance (with limits of at least $1,000,000) for Contractor 's employees in accordance with the laws of the State of California, Section 3700 of the Labor Code In addition, Contractor shall require each subcontractor to similarly maintain Workers' Compensation Insurance and Employer's Liability Insurance in accordance with the laws of the State of California, Section 3700 for all of the subcontractor's employees.

Contractor shall submit to City, along with the certificate of insurance, a Waiver of Subrogation endorsement in favor of City, its officials, officers, employees, agents, and volunteers. Company or companies providing insurance coverage shall be acceptable to City, if in the form and coverage as set forth in the Contract Documents.

2. COMMERCIAL GENERAL LIABILITY INSURANCE

a. Contractor shall procure and maintain during the life of this Contract and for such other period as may be required herein, at its sole expense, occurrence form Commercial General Liability insurance coverage, at least as broad as the most current ISO CGL Form 00 01 including but not limited to, premises liability, contractual liability, products/completed operations if applicable, personal and advertising injury which may arise from or out of Contractor's operations, use, and management of the Project site, or the performance of its obligations hereunder. Policy limits shall not be less than $1,000,000 per occurrence, $2,000,000 general aggregate, for bodily injury, personal injury and property damage, including without limitation, blanket contractual liability, and a $2,000,000 completed operations aggregate. [**PLEASE NOTE THAT THIS AMOUNT MAY NEED TO BE ADJUSTED UPWARD DEPENDING ON THE NATURE AND SCOPE OF THE WORK TO BE PERFORMED. INSURANCE COVERAGE SHOULD BE EVALUATED ON A CASE-BY-CASE BASIS. ALWAYS DELETE THIS BOX.**]Defense costs shall be paid in addition to the limits.

b. Such policy shall comply with all the requirements of this Article. The limits set forth herein shall apply separately to each insured against whom claims are made or suits are brought, except with respect to the limits of liability. Further the limits set forth herein shall not be construed to relieve the Contractor from liability in excess of such coverage, nor shall it limit Contractor's indemnification obligations to City, and shall not preclude City

from taking such other actions available to City under other provisions of the Contract Documents or law.

c. Contractor shall make certain that any and all subcontractors hired by Contractor are insured in accordance with this Contract. If any subcontractor's coverage does not comply with the foregoing provisions, Contractor shall indemnify and hold City harmless from any damage, loss, cost, or expense, including attorneys' fees, incurred by City as a result thereof.

d. All general liability policies provided pursuant to the provisions of this Article shall comply with the provisions of the Contract Documents.

e. All general liability policies shall be written to apply to all bodily injury, including death, property damage, personal injury, owned and non-owned equipment, blanket contractual liability, completed operations liability, explosion, collapse, under-ground excavation, removal of lateral support, and other covered loss, however occasioned, occurring during the policy term, and shall specifically insure the performance by Contractor of that part of the indemnification contained in these General Conditions, relating to liability for injury to or death of persons and damage to property. If the coverage contains one or more aggregate limits, a minimum of 50% of any such aggregate limit must remain available at all times; if over 50% of any aggregate limit has been paid or reserved, City may require additional coverage to be purchased by Contractor to restore the required limits. Any umbrella or excess liability policy shall include the additional insured endorsement described in the Contract Documents.

3. AUTOMOBILE LIABILITY INSURANCE

Contractor shall take out and maintain at all times during the term of this Contract Automobile Liability Insurance at least as broad as ISO CA 00 01 (Any Auto) covering bodily injury and property damage for all activities of the Contractor arising out of or in connection with Work to be performed under these Contract Documents, including coverage for any owned, hired, non-owned or rented vehicles, in an amount not less than $1,000,000 combined single limit for each accident. Such insurance shall be provided in a form and with insurance companies acceptable to City and comply with the provisions of Section 6 below.

4. UMBRELLA OR EXCESS LIABILITY INSURANCE.

Contractor shall obtain and maintain an umbrella or excess liability insurance policy with limits of not less than $4,000,000 that will provide bodily injury, personal injury and property damage liability coverage at least as broad as the primary coverages set forth above, including commercial general liability and employer's liability. Such policy or policies shall include the following terms and conditions:

a. A drop down feature requiring the policy to respond in the event that any primary insurance that would otherwise have applied proves to be uncollectable in whole or in part for any reason;

b. Pay on behalf of wording as opposed to reimbursement;

c. Concurrency of effective dates with primary policies; and

d. Policies shall "follow form" to the underlying primary policies.

e. Insureds under primary policies shall also be insureds under the umbrella or excess policies.

5. BUILDER'S RISK ["ALL RISK"]

The City has obtained Builder's Risk ["All Risk"] extended coverage insurance for the Project. Contractor shall **NOT** procure Builder's Risk ["All Risk"] insurance for this Project, and shall **NOT** include the cost of said coverage in its bid price/the Contract Price.

6. FORM AND PROOF OF CARRIAGE OF INSURANCE

a. Any insurance carrier providing insurance coverage required by the Contract Documents shall be admitted to and authorized to do business in the State of California unless waived, in writing, by City's Risk Manager. Carrier(s) shall have an A.M. Best rating of not less than an A-:VII.

b. Insurance deductibles or self-insured retentions must be declared by the Contractor, and such deductibles and retentions shall have the prior written consent from City. At the election of City the Contractor shall either 1) reduce or eliminate such deductibles or self-insured retentions, or 2) procure a bond which guarantees payment of losses and related investigations, claims administration, and defense costs and expenses.

c. Contractor shall cause its insurance carrier(s) to furnish City with either 1) a properly executed original Certificates(s) of Insurance and certified original copies of Endorsements effecting coverage as required herein, or 2) if requested to do so in writing by City's Risk Manager, provide original Certified copies of policies including all Endorsements and all attachments thereto, showing such insurance is in full force and effect. All required policies of Commercial General Liability, Automobile Liability insurance shall be endorsed to name the City, its officials, officers, employees, agents and volunteers as additional insureds. For all policies of Commercial General Liability insurance, Contractor shall provide endorsements in the form of ISO CG 20 10 10 01 and 20 37 01 01 (or endorsements providing the exact same coverage) to effectuate this requirement. Further, all policies of insurance shall contain or shall be

endorsed to contain the covenant of the insurance carrier(s) that shall provide no less than thirty (30) days written notice be given to City prior to any material modification or cancellation of such insurance.

d. In the event of a material modification or cancellation of coverage, City may terminate or Stop Work pursuant to the Contract Documents, unless City receives, prior to such effective date, another properly executed original Certificate of Insurance and original copies of endorsements or certified original policies, including all endorsements and attachments thereto evidencing coverages set forth herein and the insurance required herein is in full force and effect. Contractor shall not take possession, or use the Project site, or commence operations under these Contract Documents until City has been furnished original Certificate(s) of Insurance and certified original copies of Endorsements or policies of insurance including all Endorsements and any and all other attachments as required in this Section. The original Endorsements for each policy and the Certificate of Insurance shall be signed by an individual authorized by the insurance carrier to do so on its behalf.

e. All required insurance coverages shall contain or be endorsed to waive subrogation against the City, its officials, officers, employees, agents, and volunteers or shall specifically allow Contractor or others providing insurance evidence in compliance with these specifications to waive their right of recovery prior to a loss. Contractor hereby waives its own right of recovery against City, and shall require similar written express waivers and insurance clauses from each of its Subcontractors.

f. It is understood and agreed to by the parties hereto and the insurance company(s), that the Certificate(s) of Insurance and policies shall so covenant and shall be construed as primary, and City's insurance and/or deductibles and/or self-insured retentions or self-insured programs shall not be construed as contributory. The Contractor shall provide endorsement(s) to this effect at the City's request.

g. City reserves the right to adjust the monetary limits of insurance coverage's during the term of this Contract including any extension thereof-if in City's reasonable judgment, the amount or type of insurance carried by the Contractor becomes inadequate.

h. In the event any policy of insurance required by the Contract Documents does not comply with these specifications or is canceled and not replaced immediately so as to avoid a lapse in the required coverage, City has the right but not the duty to obtain the insurance it deems necessary and any premium paid by City will be promptly reimbursed by Contractor or City will withhold amounts sufficient to pay premium from Contractor payments. In the alternative, City may cancel this Contract, effective upon notice.

i. Contractor acknowledges and agrees that actual or alleged failure on the part of the City to inform Contractor of non-compliance with any requirement imposed no additional obligation on the City nor does it waive any rights hereunder.

j. Requirement of specific coverage or limits contained in this section are not intended as a limitation on coverage, limits, or other requirement, or a waiver of any coverage normally provided by any insurance.

k. Contractor shall be responsible for causing all Subcontractors of any tier working under this Contract to purchase insurance meeting the requirements contained herein, including adding the City its officials, officers, employees, agents and volunteers as Additional Insureds to the subcontractor's policies. All policies of Commercial General Liability insurance provided by Subcontractors shall be endorsed to name the City, its officials, officers, employees, agents and volunteers as additional insureds using endorsement form ISO GC 20 38 04 13 (or an endorsement providing the exact same coverage) to effectuate this requirement. Contractor shall not allow any Subcontractor to commence work relating to these Contract Documents until it has received satisfactory evidence of Subcontractor's compliance with all insurance requirements under this Contract. The Contractor shall provide satisfactory evidence of compliance with this section upon request of the City.