June 2019 | Updated Geologic and Environmental Hazards Assessment Report

NAKASE ELEMENTARY SCHOOL

for Toll Brothers

Prepared for:

Toll Brothers
Contact: Ilan P. Feingold,
Project Manager
715 W. Town & Country Road, Suite 200
Orange, California 92828
714.347.1300

Prepared by:

PlaceWorks
Contact: Michael Watson, PG,
Associate Geologist
2850 Inland Empire Boulevard, Suite B
Ontario, California 91764
909.989.4449
info@placeworks.com
www.placeworks.com

PLACEWORKS

Table of Contents

Section **Page**

1. Introduction 1
   - 1.1 INTRODUCTION 1
   - 1.2 PROJECT LOCATION 1
   - 1.3 PROJECT DESCRIPTION 1
2. Environmental Checklist 7
   - 2.1 STATE STANDARDS FOR SCHOOL FACILITIES 7
3. Environmental Analysis 11
   - 3.1 AIR QUALITY 11
   - 3.2 GEOLOGY AND SOILS 12
   - 3.3 HAZARDS AND HAZARDOUS MATERIALS 13
   - 3.4 HYDROLOGY AND FLOODING 16
   - 3.5 LAND USE AND PLANNING 17
   - 3.6 NOISE 19
   - 3.7 PUBLIC SERVICES 19
   - 3.8 TRANSPORTATION/TRAFFIC 19
   - 3.9 EXEMPTIONS TO SITING STANDARDS 21
4. Conclusions and Recommendations 23
5. References 25
   - 5.1 PRINTED REFERENCES 25
   - 5.2 RECONNAISSANCE 26
   - 5.3 WEBSITES 26
6. List of Preparers 29
   - 6.1 LEAD AGENCY 29
   - 6.2 PLACEWORKS 29

Table of Contents

LIST OF FIGURES

Figure **Page**

Figure 1 Site Location 3
Figure 2 Aerial Photograph 5

1. Introduction

1.1 INTRODUCTION

Toll Brothers is planning to develop a 1,000-student elementary school on 10-acres of the Toll Brothers' 120.83-acre development site. The State of California's standards for school site selection are found in Title 5 of the California Code of Regulations (CCR) Section 14010, and additional codes and regulations applicable to school facilities that are found in the Education, Government and Public Resources Codes (Ed. Code, Gov't Code and PRC, respectively). This study provides an assessment and supporting documentation of State school facility standards applicable to State-funded new school sites.

The California Environmental Quality Act (CEQA) requires lead agencies to address the environmental impacts of a project on the environment. These are separate and distinct from the issues addressed in this study, which deal with a site's ability to provide a safe and healthy environment for the school.

1.2 PROJECT LOCATION

The Toll Brothers' development site is 120.83 acres at 20621 Lake Forest Drive, Lake Forest, California bounded by Bake Parkway on the northwest, office buildings on the southwest, Serrano Creek on the southeast, and Rancho Parkway on the northeast (Figure 1, *Site Location*). The 10 acres for the proposed elementary school and play fields and active use areas (project site) are in the northern corner of the Toll Brothers' parcel (Figure 2, *Aerial Photograph*). Dina El Chammas of PlaceWorks performed a site reconnaissance on February 8, 2019, to confirm the current site conditions. Figure 1, *Site Location*, and Figure 2, *Aerial Photograph*, respectively show the project site from regional and aerial perspectives.

1.3 PROJECT DESCRIPTION

Toll Brothers has agreed to designate 10 acres within the 120.83-acre development for a new 1,000-student elementary school and play fields and active use areas. In April of 2017, PlaceWorks completed a Geologic and Environmental Hazards Assessment (GEHA) for the overall 120.83 Nakase Nursery site. This update to the 2017 GEHA will focus the assessment on the now-designated 10-acre school site in the northern corner of the Nakase Nursery site. This study will be used to determine if there are any "fatal flaws" at this project site.

1. Introduction

This page intentionally left blank.

Figure 1 - Site Location

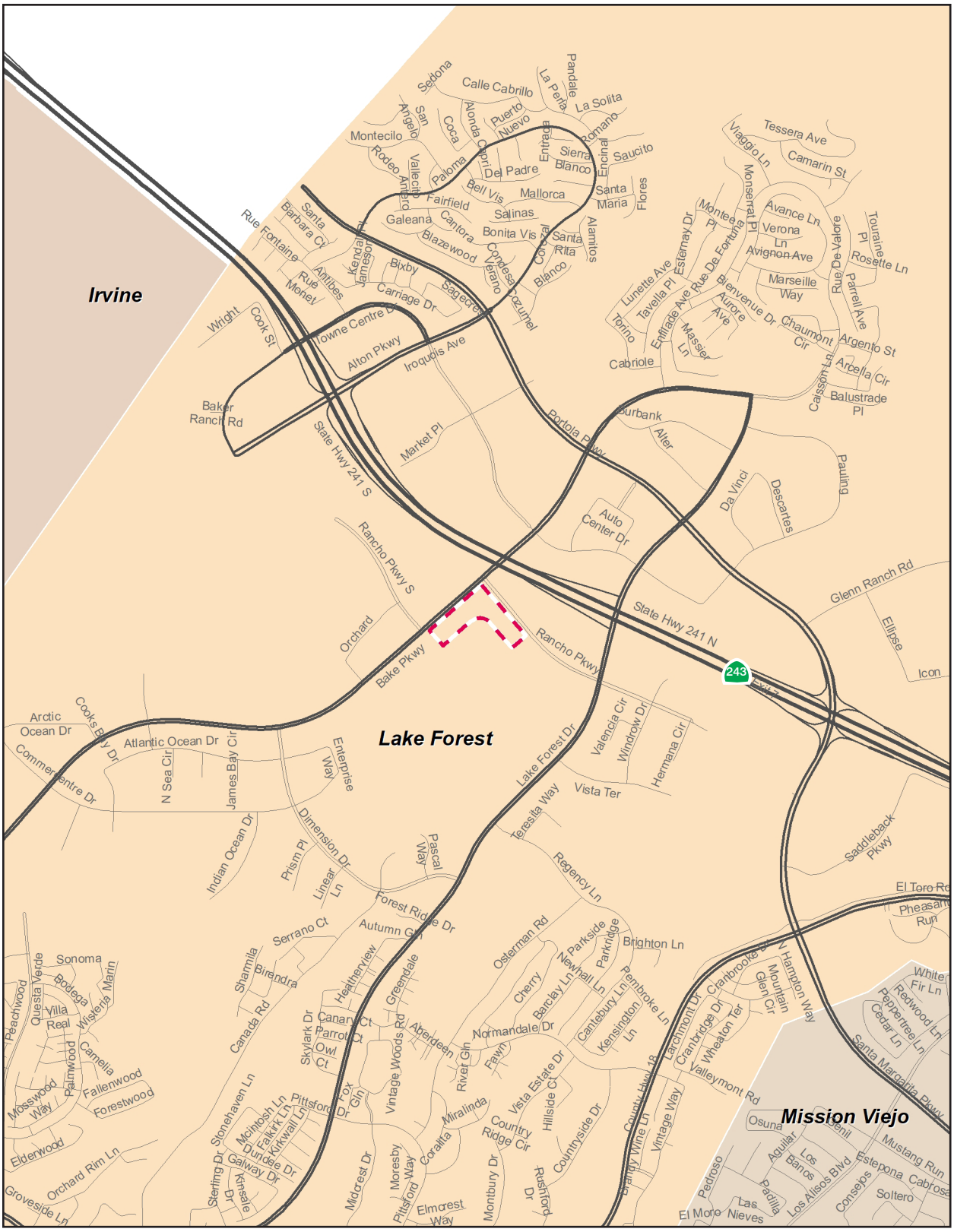

School Boundary

0 2,000
Scale (Feet)

Source: ESRI, 2019

1. Introduction

This page intentionally left blank.

Figure 2 - Aerial Photograph

School Boundary

0 450
Scale (Feet)

Source: ESRI, 2019

1. Introduction

This page intentionally left blank.

2. Environmental Checklist

2.1 STATE STANDARDS FOR SCHOOL FACILITIES

The State of California's standards for school site selection are found in Title 5 of the California Code of Regulations (CCR) Section 14010 and additional codes and regulations applicable to school facilities are found in the Education, Government and Public Resources Codes. The following checklist provides a list of a questions and code citations related to State-funded school site approvals. The health and safety issues reviewed in the Department of Toxic Substances Control (DTSC) process are addressed under separate cover.

STATE STANDARDS CHECKLIST FOR STATE-FUNDED SCHOOL FACILITIES –
SCHOOL SITE APPROVAL
(Documentation for SFPD 4.0, 4.01-4.03, School Site Approval)

Topic	Code References
Air Quality	
Is the boundary of the proposed school site within 500 feet of the edge of the closest traffic lane of a freeway or busy traffic corridor? If yes, would the project create an air quality health risk due to the placement of the school?	Ed. Code §17213(c)(2)(C); CCR Title 5 §14010(q)
Would the project create an air quality hazard due to the placement of a school within one-quarter mile of: (a) permitted and non-permitted facilities identified by the jurisdictional air quality control board or air pollution control district; (b) freeways and other busy traffic corridors; (c) large agricultural operations; and/or (d) a rail yard, which might reasonably be anticipated to emit hazardous air emissions, or handle hazardous or acutely hazardous material, substances, or waste?	Ed. Code § 17213(b); CCR Title 5 §14010(q)
Geology and Soils	
Does the site contain an active earthquake fault or fault trace, or is the site located within the boundaries of any special studies zone or within an area designated as geologically hazardous in the safety element of the local general plan?	Ed. Code, §17212 and §17212.5; CCR Title 5 §14010(f)
Would the project involve the construction, reconstruction, or relocation of any school building on the trace of a geological fault along which surface rupture can reasonably be expected to occur within the life of the school building?	Ed. Code §17212.5
Would the project involve the construction, reconstruction, or relocation of any school building on a site subject to moderate-to-high liquefaction, landslides, or expansive soils?	CCR, Title 5 §14010(i) School Site Selection and Approval Guide, Appendix H
Are naturally occurring asbestos minerals located at the site?	School Site Selection and Approval Guide, Appendix H
Hazards and Hazardous Materials	
Does the proposed school site contain one or more pipelines, situated underground or aboveground, which carry hazardous substances, acutely hazardous materials, or hazardous wastes, unless the pipeline is a natural gas line that is used only to supply natural gas to that school or neighborhood?	Ed. Code §17213(a)(3)
Is the proposed school site located near an aboveground water or fuel storage tank or within 1,500 feet of an easement of an aboveground or underground pipeline that can pose a safety hazard to the site?	CCR, Title 5 § 14010 (h)

2. Environmental Checklist

STATE STANDARDS CHECKLIST FOR STATE-FUNDED SCHOOL FACILITIES – SCHOOL SITE APPROVAL
(Documentation for SFPD 4.0, 4.01-4.03, School Site Approval)

Topic	Code References
Is the school site in an area designated in a city, county, or city and county general plan for agricultural use and zoned for agricultural production, and if so, do neighboring agricultural uses have the potential to result in any public health and safety issues that may affect the pupils and employees at the school site? *(Does not apply to school sites approved by CDE prior to January 1, 1997.)*	Ed. Code § 17215.5
Is the property line of the proposed school site less than the following distances from the edge of respective power line easements: (1) 100 feet of a 50–133 kV line; (2) 150 feet of a 220–230 kV line; or (3) 350 feet of a 500–550 kV line?	CCR, Title 5 § 14010 (c)
Does the project site contain a current or former hazardous waste disposal site or solid waste disposal site and, if so, have the wastes been removed?	Ed. Code § 17213(a)(1)
Is the project site a hazardous substance release site identified by the state Department of Health Services in a current list adopted pursuant to §25356 for removal or remedial action pursuant to Chapter 6.8 of Division 20 of the Health and Safety Code?	PRC § 21151.8 (a)(1)(B); Ed. Code § 17213(a)(2)
If prepared, has the risk assessment been performed with a focus on children's health posed by a hazardous materials release or threatened release, or the presence of naturally occurring hazardous materials on the schoolsite?	Ed. Code § 17210.1(a)(3)
If a response action is necessary and proposed as part of this project, has it been developed to be protective of children's health, with an ample margin of safety?	Ed. Code § 17210.1(a)(4)
Is the proposed school site situated within 2,000 feet of a significant disposal of hazardous waste?	CCR, Title 5 § 14010 (t)
Is the site within 300 feet of an active oil or natural gas well?	Fire Code § 3406.3.1
Hydrology and Flooding	
Is the project site subject to flooding or dam/tank inundation or street flooding?	Ed. Code § 17212 and 17212.5 CCR, Title 5 § 14010 (g) School Site Selection and Approval Guide, Appendix H
Land Use and Planning	
Would the proposed school conflict with any existing or proposed land uses, such that a potential health or safety risk to students would be created?	Ed. Code § 17213 Gov't. Code § 65402 CCR, Title 5 § 14010 (m)
Are there easements on or adjacent to the site that would restrict access or building placement?	CCR, Title 5 § 14010(r)
Is the school site proportionate in its length to width ratio to accommodate the building layout, parking and playfields that can be safely supervised and does not exceed the allowed passing time to classes for the district?	CCR, Title 5 § 14010(j)
Is the site located within the proposed attendance area to encourage student walking and avoid extensive bussing unless bussing for ethnic diversity?	CCR, Title 5 § 14010(n)
Has the district considered environmental factors of light, wind, noise, aesthetics, and air pollution in its site selection process?	CCR, Title 5 § 14010(q)
Is the site within a designated Farmland Security Zone?	Government Code § 51296.5
Noise	
Is the proposed school site located adjacent to or near a major arterial roadway or freeway whose noise generation may adversely affect the educational program?	CCR, Title 5 § 14010 (e)
Public Services	
Does the site promote joint use of parks, libraries, museums, and other public services?	CCR, Title 5, § 14010 (o)
Is the site conveniently located for public services, including but not limited to fire protection, police protection, public transit and trash disposal wherever feasible?	CCR, Title 5, § 14010 (p)

STATE STANDARDS CHECKLIST FOR STATE-FUNDED SCHOOL FACILITIES –
SCHOOL SITE APPROVAL
(Documentation for SFPD 4.0, 4.01-4.03, School Site Approval)

Topic	Code References
Transportation/Traffic	
Are traffic and pedestrian hazards mitigated per Caltrans' School Area Pedestrian Safety manual?	CCR, Title 5 § 14010 (l)
Is the site easily accessible from arterials and is the minimum peripheral visibility maintained for driveways per Caltrans' Highway Design Manual?	CCR, Title 5 § 14010 (k)
Is the proposed school site within 1,500 feet of a railroad track easement?	CCR, Title 5 § 14010 (d)
Is the proposed school site within two nautical miles, measured by air line, of that point on an airport runway or potential runway included in an airport master plan that is nearest to the site? *(Does not apply to school sites acquired prior to January 1, 1966.)*	Ed. Code § 17215 (a)&(b)

Note: Any documentation related to the California Environmental Quality Act is provided under separate cover.
This checklist is also applicable to property additions to existing school sites.

2. Environmental Checklist

This page intentionally left blank.

3. Environmental Analysis

Section 2.1 provided a checklist of the State of California's health and safety standards for school sites. This section provides documentation and an evaluation of applicable standards, and mitigation measures where appropriate.

3.1 AIR QUALITY

3.1.1 Is the boundary of the proposed school site within 500 feet of the edge of the closest traffic lane of a freeway or busy traffic corridor? If yes, would the project create an air quality health risk due to the placement of the school?

No Significant Hazard. State Route 241 is located about 300 feet northeast of the site (USGS 2015). Additionally, Public Resources Code Section 21151.8(b)(9) and Education Code Section 17213(d)(9) define a "freeway or other busy traffic corridors" as roadways that on an average day have traffic in excess of 50,000 vehicles in a rural area or 100,000 vehicles in an urban area. The project site is within the 500-foot setback from SR-241. According to Albert Grover Associates (2010), the average daily traffic volume on Bake Parkway between Dimension Drive and Orchard Road in 2010 was 34,500 trips. Urban Crossroads (2019) measured the average daily traffic volume on Bake Parkway between Dimension Drive and Orchard Road in 2017 as 29,500 trips, which is lower most likely due to the opening of the Alton Parkway extension north of Trabuco Road. The average daily traffic volume on Lake Forest Drive between Vista Terrace and Regency Lane in 2010 was 21,200 trips (Albert Grover Associates 2010). Urban Crossroads (2019) measured the average daily traffic volume on Lake Forest Drive between Vista Terrace and Regency Lane in 2017 as 22,300 trips. Based on the results of a Health Risk Assessment (PlaceWorks 2019a), hazardous air emissions generated from stationary and mobile sources within a quarter mile radius are not anticipated to pose an actual or potential endangerment to students and staff occupying the future school, and no mitigation measures are necessary.

3.1.2 Would the project create an air quality hazard due to the placement of a school within one-quarter mile of: (a) permitted and non-permitted facilities identified by the jurisdictional air quality control board or air pollution control district; (b) freeways and other busy traffic corridors; (c) large agricultural operations; and/or (d) a rail yard, which might reasonably be anticipated to emit hazardous air emissions, or handle hazardous or acutely hazardous material, substances, or waste?

No Significant Hazard. Based on a review of the South Coast Air Quality Management District's (AQMD) Facility Information Detail (FIND) database, there are three facilities within a quarter mile of the site (AQMD 2019). A Shell gas station located at 26721 Rancho Parkway was identified. Loan Depot located at 26642 Towne Centre Drive was identified for emergency generators and a boiler permit. Rubio's Fresh Mexican Grill #91 located at 26612 Towne Centre Drive was identified for a natural gas charbroiler.

3. Environmental Analysis

The proposed project site, in the north corner of the project site is within 500-feet of SR-241. Based on a review of Google Earth (2019) and a site reconnaissance (PlaceWorks 2019a), there is currently a nursery on the site, although this nursery would not exist concurrently with the proposed school use. No agricultural uses will exist within a quarter mile of the site when the school is constructed. No rail yards are located within a quarter mile of the site. A Health Risk Assessment report prepared by PlaceWorks (2019a) for the project site concluded that based on a comparison to the carcinogenic and non-carcinogenic thresholds established by OEHHA and SCAQMD, hazardous air emissions generated from the stationary and mobile sources within a quarter-mile radius are not anticipated to pose an actual or potential endangerment to students and staff occupying the project site. No mitigation measures are necessary.

3.2 GEOLOGY AND SOILS

Based on a review of the United States Geological Survey (USGS) 7.5-minute Topographic Series, Lake Forest, California Quadrangle Map (USGS 2015), the property is in the foothills of the Santa Ana Mountains within the northern part of the Peninsular Ranges Geomorphic Province. The Peninsular Ranges Geomorphic Province extends approximately 900 miles southward from the Los Angeles Basin to Baja California, Mexico and is characterized by elongated northwest-trending mountain ranges separated by sediment-floored valleys (Yerkes et al. 1965). The most dominant structural features of the province are the northwest-trending fault zones, most of which die out, merge with, or are terminated by the steep reverse faults at the southern margin of the San Gabriel Mountains within the Transverse Ranges Geomorphic Province north of the site. The property itself sits atop sandy Holocene and late Pleistocene alluvial deposits, and Oso Member sandstone of the early Pliocene and Miocene Capistrano Formation (Morton 2004). Based on NMG Geotechnical (2016), the site has been partially graded.

3.2.1 Does the site contain an active earthquake fault or fault trace, or is the site located within the boundaries of any special studies zone or within an area designated as geologically hazardous in the safety element of the local general plan?

No Significant Hazard. The site is not within or immediately adjacent (i.e., within a few hundred feet) to an Alquist-Priolo Earthquake Fault Zone (California Geological Survey [CGS] 2017). The nearest Alquist-Priolo Earthquake Fault Zone is located approximately 12 miles northeast of the site for the Elsinore Fault. Based on a review of readily-available geologic literature (Morton 2004; CGS 2000a; CGS 2017; Jennings and Bryant 2010) and the Lake Forest General Plan (1994), there are no known active faults or geologically hazardous areas on or immediately adjacent to the site.

3.2.2 Would the project involve the construction, reconstruction, or relocation of any school building on a pressure ridge or the trace of a geological fault along which surface rupture can reasonably be expected to occur within the life of the school building?

No Significant Hazard. The site is not within or immediately adjacent (i.e., within a few hundred feet) to an Alquist-Priolo Earthquake Fault Zone (CGS 2017). The nearest Alquist-Priolo Earthquake Fault Zone is located approximately 12 miles northeast of the site for the Elsinore Fault. Based on a review of readily-available geologic literature (Morton 2004; CGS 2000a; CGS 2017); Jennings and Bryant 2010) and the Lake Forest General Plan (1994), the site is not on a pressure ridge, and there are no known active faults on or

immediately adjacent to the site. On this basis, the potential for tectonic fault rupture at the site is considered negligible.

3.2.3 Would the project involve the construction, reconstruction, or relocation of any school building on a site subject to moderate-to-high liquefaction, landslides, or expansive soils?

No Significant Hazard. Liquefaction refers to loose, saturated sand, or gravel deposits that lose their load-supporting capability when subjected to intense shaking. Liquefaction potential varies based upon three primary

contributing factors: 1) cohesionless, granular soils having relatively low densities (usually of Holocene age); 2) shallow groundwater (generally less than 50 feet); and 3) moderate to high seismic ground shaking.

Based on seismic hazard mapping within CGS (2001), the updated project site is outside of a liquefaction zone. In addition, the project will be evaluated for the potential for liquefaction under the oversight of California Geological Survey [CGS] and Division of the State Architect [DSA]. Therefore, the project will not expose people or the new school buildings to adverse effects associated with liquefaction.

Landsliding is a type of erosion in which masses of earth and rock move down slope as a single unit. Susceptibility of slopes to landslides and other forms of slope failure depend on several factors. These factors are usually present in combination and include steep slopes, condition of rock and soil materials, the presence of water, formational contacts, geologic shear zones, and seismic activity.

The project site and its adjoining properties are relatively level and exhibit no substantial elevation changes or unusual geographic features. Based on seismic hazard mapping within the CGS (2001), the site has no susceptibility to landslides. Therefore, the project will not expose people or the new school buildings to adverse effects associated with landslides.

Expansive soils swell when they become wet and shrink when they dry out, resulting in the potential for cracked building foundations and in some cases, structural distress of the buildings themselves. In each case, minor to severe damage to overlying structures is possible. Based on the alluvial and terrace soils beneath the project, it is possible they could be expansive. CGS and DSA will ensure that the buildings are tested for, and if necessary, sufficiently mitigated for the condition. Therefore, the project will not expose people or the new school buildings to adverse effects associated with expansive soils.

3.2.4 Are naturally occurring asbestos minerals located at the site?

No Significant Hazard. Based on available data, no naturally-occurring serpentine rock or rock formations that may contain a significant quantity of asbestos are located in within 10 miles of the site (CGS 2000b; Van Gosen and Clinkenbeard 2011). The nearest outcrop of serpentine rock is located on Santa Catalina Island offshore and west of the site.

3.3 HAZARDS AND HAZARDOUS MATERIALS

3.3.1 Does the proposed school site contain one or more pipelines, situated underground or aboveground, which carry hazardous substances, acutely hazardous materials, or hazardous

3. Environmental Analysis

wastes, unless the pipeline is a natural gas line that is used only to supply natural gas to that school or neighborhood? Does the proposed school site contain pressurized sewer lines and high pressure water pipelines within 1,500 feet of the proposed site?

No Significant Hazard. There are no chemical pipelines on the site, according to the National Pipeline Mapping System (online mapping database (NPMS 2019). Based on the response from Southern California Gas Company and a review of the Southern California Gas Company Gas Transmission and High-Pressure Distribution Pipeline Interactive Map (Appendix A), there are no high-pressure natural gas pipelines on or within 1,500-feet of the project site. Based on plans provided from Irvine Ranch Water District, there are no pressurized sewer lines within 1,500 feet of the site. Based on plans provided from Irvine Ranch Water District, there are 16 large volume (≥12 inch diameter) pipelines within 1,500 feet of the project site. A Water Pipeline Risk Assessment was performed to address the 16 water pipelines. Based on the worst-case analysis of the water pipelines, the water released from a full-flow rupture of any of the water pipelines would be entirely contained within the confines of the street curbing and would not result in flooding at the school site (PlaceWorks 2019b).

3.3.2 Is the proposed school site located near an aboveground water or fuel storage tank or within 1,500 feet of an easement of an aboveground or underground pipeline that can pose a safety hazard to the site?

Aboveground Water or Fuel Storage Tank

No Significant Hazard. No aboveground fuel storage tanks were identified within a 1,500-foot radius, based on a site reconnaissance (PlaceWorks 2019a), and review of a topographic map (USGS 2015). Two aboveground water tanks are located northwest of the project site (PlaceWorks 2019b). Based on the worst-case analysis of the release of all the water in each tank at maximum storage capacity, the released water would flow away from the proposed school site to the southeast (PlaceWorks 2019b).

Hazardous Substance Pipelines

No Significant Hazard. There are no chemical pipelines within a 1,500-foot radius, according to the National Pipeline Mapping System (online mapping database (NPMS 2019). Based on the response from Southern California Gas Company and a review of the Southern California Gas Company Gas Transmission and High-Pressure Distribution Pipeline Interactive Map (Appendix A), there are no high-pressure natural gas pipelines within a 1,500-foot radius of the project.

Sewer and Water Pipelines

No Significant Hazard. Based on plans provided from Irvine Ranch Water District, 16 high volume water pipelines were identified within 1,500-feet of the project site. A Water Pipeline Risk Assessment concluded that full-flow ruptures from any of the water pipelines would be entirely contained within the confines of street curbing and would not result in flooding at the school site. There are no pressurized sewer lines within 1,500-feet of the project site according to the response from Irvine Ranch Water District.

3.3.3 Is the school site in an area designated in a city, county, or city and county general plan for agricultural use and zoned for agricultural production, and if so, do neighboring agricultural uses have the potential to result in any public health and safety issues that may affect the pupils and employees at the school site? (Does not apply to school sites approved by CDE prior to January 1, 1997.)

No Significant Hazard. Based on a review of the City of Lake Forest Land Use Map, the project site and adjoining land is designated as a business park. According to the City of Lake Forest Zoning Map, the project site and adjoining land is currently zoned as A1 for agricultural production. After implementation of the project, there will be no neighboring agricultural uses. Therefore, there is no potential for any public health and safety issues from neighboring agricultural uses.

3.3.4 Is the property line of the proposed school site less than the following distances from the edge of respective power line easements: (1) 100 feet of a 50–133 kV line; (2) 150 feet of a 220–230 kV line; or (3) 350 feet of a 500–550 kV line?

No Significant Hazard. Based on the response from Southern California Edison, there are 66 kV lines adjoining the site along Bake Parkway. Based on information from Toll Brothers, these 66 kV lines will be undergrounded prior to construction of the school. The setback for a 66 kV underground line is 25 feet. Pursuant to the CCR Title 5 regulations, Toll Brothers is requesting a Power Line Setback Exemption from the California Department of Education for Unlimited Activity Use within the 25-foot setback zone along the northwestern boundary of the proposed school site. An electromagnetic fields (EMF) Field Management Plan has been prepared by PlaceWorks (2019c) to minimize potential causes of elevated EMF levels on the school site within the 25-foot setback zone. The mandatory compliance with the Field Management Plan would reduce the potential hazard from elevated EMF levels to less than significant.

3.3.5 Does the project site contain a current or former hazardous waste disposal site or solid waste disposal site and, if so, have the wastes been removed?

No Significant Hazard. Based on a review of the EnviroStor, GeoTracker and SWIS databases, the project site does not contain a current or former hazardous waste disposal site or solid waste disposal site (DTSC 2017; SWRCB 2019; CalRecycle 2019).

3.3.6 Is the project site a hazardous substance release site identified by the state Department of Health Services in a current list adopted pursuant to §25356 for removal or remedial action pursuant to Chapter 6.8 of Division 20 of the Health and Safety Code?

No Significant Hazard. Based on a review of the EnviroStor and GeoTracker databases, no hazardous substance release sites were identified within the project site (DTSC 2019; SWRCB 2019).

3.3.7 If prepared, has the risk assessment been performed with a focus on children's health posed by a hazardous materials release or threatened release, or the presence of naturally occurring hazardous materials on the school site?

No Significant Hazard. Based on a review of the EnviroStor and GeoTracker databases, no hazardous waste cleanup sites, permitted sites or underground storage tank (UST) sites were identified within the project site

(DTSC 2019; SWRCB 2019). Thus, the project site is not listed on any of the federal, state and local agency databases searched by EnviroStor and GeoTracker, including those identified under Section 65962.5 of the California Government Code. In addition, as stated in Section 3.2.4, there are no naturally-occurring asbestos deposits in the vicinity of the site.

3.3.8 If a response action is necessary and proposed as part of this project, has it been developed to be protective of children's health, with an ample margin of safety?

No Significant Hazard. Based on the information in Section 3.3.3, a response action is not necessary at the site.

3.3.9 Is the proposed school site situated within 2,000 feet of a significant disposal of hazardous waste?

No Significant Hazard. Based on a 2019 review of the EnviroStor and GeoTracker databases, the project is not within 2,000 feet of a significant disposal of hazardous waste (DTSC 2019; SWRCB 2019).

3.3.10 Is the site within 300 feet of an active oil or natural gas well?

No Significant Hazard. Based on a review of the Well Finder database, the project is not within 300 feet of an active oil and natural gas well (DOGGR 2019). According to the online Division of Oil, Gas, and Geothermal Resources GIS, the nearest well to the project site is 1.38 miles to the southwest. DOGGR lists the well status as plugged and abandoned. Morton and Sons abandoned the well on December 6, 1948.

3.4 HYDROLOGY AND FLOODING

3.4.1 Is the project site subject to flooding or tank/dam inundation or street flooding?

No Significant Hazard. According to the FEMA Map Service Center website, the new boundaries of the proposed project are not within a 100-year flood zone. According to the California Office of Emergency Services (2019), the site does not lie within a zone of potential dam inundation.

A seiche is an oscillating surface wave in a restricted or enclosed body of water, generated by ground motion, usually during an earthquake. Seiches are of concern relative to water storage facilities, because inundation from a seiche can occur if the wave overflows a containment wall, such as the wall of a reservoir, water storage tank, dam, or other artificial body of water. As there are no large permanent bodies of water on, or topographically upgradient in the immediate vicinity of the subject site, seiching is not considered to be a potential hazard for the site.

Tsunamis are a type of earthquake-induced flooding produced by large-scale sudden disturbances of the sea floor. Tsunami waves interact with the shallow sea floor bathymetry upon approaching a landmass, resulting in an increase in wave height, and a destructive run-up (wave surge) into low-lying coastal areas. Based on the elevation of the site and the distance from the ocean, the potential for tsunamis at the site is negligible. Project implementation would not expose people or structures to adverse effects associated with flooding or inundation.

3.5 LAND USE AND PLANNING

3.5.1 Would the proposed school conflict with any existing or proposed land uses, such that a potential health or safety risk to students would be created?

No Significant Hazard. Although the existing site is used as a tree nursery, all operations would cease as a result of the project. Properties within a quarter-mile radius of the site are generally zoned for office, commercial and recreational uses. Based on Toll Brothers' plans, the school will be principally surrounded by residential development. Therefore, there is no significant hazard to the project.

3.5.2 Are there easements on or adjacent to the site that would restrict access or building placement?

No Significant Hazard. Based on a review of the assessor's parcel map, no easements are located on the project site. Therefore, there is no significant hazard to the project.

3.5.3 Is the school site proportionate in its length to width ratio to accommodate the building layout, parking and playfields that can be safely supervised and does not exceed the allowed passing time to classes for the district?

No Significant Hazard. Although final plans for the school have not been developed, the school will be developed with footprint proportionality and ease of student access in mind. Therefore, there is no significant hazard to the project.

3.5.4 Has the district considered environmental factors of light, wind, noise, aesthetics, and air pollution in its site selection process?

Light and Wind

No Significant Hazard. The project site would be exposed to standard climate conditions experienced by Lake Forest, which is generally characterized by Mediterranean conditions. Based on a windrose created for the former El Toro Marine Corps Air Station, the predominant wind directions are from the south, the west and the west-northwest (California Air Resources Board 2003). The average wind speed is 3.5 miles per hour, though sustained winds of 19 miles per hour have been recorded (California Air Resources Board 2003) As applicable, operation of the proposed project would consider these environmental conditions. Therefore, project implementation would not expose site occupants to adverse light or wind conditions.

Aesthetics

No Significant Hazard. Project development would not degrade the existing visual character of the site. The project site is in an area with suburban land uses. Development of the proposed project would be consistent with the surrounding land uses. The character and quality of the site would not be incompatible with the nearby structures.

3. Environmental Analysis

Air Pollution

No Significant Hazard. Public Resources Code Section 21151.8 and Education Code Section 17213 prohibit the approval of a project involving acquisition of a school site unless the following occur:

1. Consultation with an air pollution control district or air quality management district indicates that permitted and non-permitted facilities (including, but not limited to, freeways and other busy traffic corridors, large agricultural operations, and railyards, within one-fourth of a mile of the proposed schoolsite that might be reasonably be anticipated to emit hazardous air emissions, or to handle hazardous or extremely hazardous materials, substances, or waste) or significant pollution sources do not exist; or

2. The facilities or other pollution sources exist, but one of the following conditions applies:

   A. The health risks from the facilities or other pollution sources do not and will not constitute an actual or potential endangerment of public health to persons who would attend or be employed at the school.

   B. The governing board finds that corrective measures required under an existing order by another government entity that has jurisdiction over the facilities or other pollution sources will, before the school is occupied, result in the mitigation of all chronic or accidental hazardous air emissions to levels that do not constitute an actual or potential endangerment of public health to persons who would attend or be employed at the proposed school. If the governing board makes this finding, the governing board shall also make a subsequent finding, prior to the occupancy of the school, that the emissions have been mitigated to these levels.

   C. For a school site with a boundary that is within 500 feet of the edge of the closest traffic lane of a freeway or other busy traffic corridor, the governing board of the school district determines, through analysis pursuant to paragraph (2) of subdivision (b) of Section 44360 of the Health and Safety Code, based on appropriate air dispersion modeling, and after considering any potential mitigation measures, that the air quality at the proposed site is such that neither short-term nor long-term exposure poses significant health risks to pupils.

   D. The governing board finds that neither of the conditions set forth in subparagraph (B) or (C) can be met, and the school district is unable to locate an alternative site that is suitable due to a severe shortage of sites that meet the requirements in subdivision (a) of Section 17213. If the governing board makes this finding, the governing board shall adopt a statement of Overriding Considerations pursuant to Section 15093 of Title 14 of the California Code of Regulations.

As stated in Section 3.1.2, there is currently a nursery on the site, although this nursery would not exist concurrently with the proposed school use. The proposed project site, in the north corner of the project site near is within 500-feet of SR-241. No rail yards are located within a quarter mile of the site. A Health Risk Assessment report prepared by PlaceWorks (2019a) for the project site concluded that based on a comparison to the carcinogenic and non-carcinogenic thresholds established by OEHHA and SCAQMD, hazardous air emissions generated from the stationary and mobile sources within a quarter-mile radius are not anticipated to

pose an actual or potential endangerment to students and staff occupying the project site. No mitigation measures are necessary.

3.5.5 Is the site within a designated Farmland Security Zone?

No Significant Hazard. Although the site is eligible for Williamson Act protection by being within Unique Farmland (Division of Land Resource Protection 2014), based on the 2015 Division of Land Resource Protection report, the site is not within a designated Farmland Security Zone.

3.6 NOISE

3.6.1 Is the proposed school site located adjacent to or near a major arterial roadway or freeway whose noise generation may adversely affect the educational program?

No Significant Hazard. The project site is in a developed area of Lake Forest away from busy traffic corridors. Although the site is approximately 300 feet from SR-241 and based on a noise impact analysis for a nearby development, may have noise levels in the 65 decibel range from SR-241, the building materials of the classrooms would dampen the noise coming from the tollway to an acceptable level for instruction (LSA Associates, Inc. 2013). No significant impacts would occur as a result of the proposed project.

3.7 PUBLIC SERVICES

3.7.1 Does the site promote joint use of parks, libraries, museums, and other public services?

No Significant Hazard. The project site could be made available for public use as the scheduling of scholastic purposes allow, in accordance with the Civic Center Act and District policy. No impacts to nearby public facilities and services would occur as a result of the proposed project.

3.7.2 Is the site conveniently located for public services, including but not limited to fire protection, police protection, public transit and trash disposal wherever feasible?

No Significant Hazard. The project site is centrally located within the City of Lake Forest and is surrounded by developed areas. The project site will have regularly scheduled trash collection and access to public transit. The Orange County Sheriff's Department is 1,371-feet to the east of the project site. There is no significant hazard. Orange County Fire Authority Station #54 is 0.62-miles to the northeast of the project site.

3.8 TRANSPORTATION/TRAFFIC

3.8.1 Are traffic and pedestrian hazards mitigated per Caltrans' School Area Pedestrian Safety manual?

No Significant Hazard. Based on existing conditions, the future project is not expected to have any significant traffic or pedestrian hazards to overcome. Future transportation facilities are subject to review and approval by the City of Lake Forest. Furthermore, the School Area Pedestrian Safety Manual will be used as a guide, and decisions related to particular traffic control devices at particular locations shall be made on the basis of an engineering and traffic survey. The school district governing board may request the appropriate city, county, or

3. Environmental Analysis

state agency to consider the installation of traffic control devices if the engineering and traffic survey determines the request to be justified. Traffic control devices include (Caltrans, 1996):

1. Warning signs and markings.
2. Variable speed limits.
3. Intersection stop signs.
4. Flashing yellow beacons.
5. Traffic signals.
6. Remove visibility obstructions.
7. School Safety Patrol.
8. Adult Crossing Guard.
9. Pedestrian separation structures.
10. Pedestrian walkways along the roadway.
11. Pedestrian walkways separated from the roadway.
12. Parking controls and curb-use zones

3.8.2 Is the site easily accessible from arterials and is the minimum peripheral visibility maintained for driveways per Caltrans' Highway Design Manual?

No Significant Hazard. Based on existing conditions, the future project is not expected to have any significant traffic or pedestrian hazards to overcome. Future transportation facilities are subject to review and approval by the City of Lake Forest.

3.8.3 Is the proposed school site within 1,500 feet of a railroad track easement?

No Significant Hazard. Based on a review of Google Earth, the site is not located within 1,500 feet of a railroad track easement.

3.8.4 Is the proposed school site within two nautical miles, measured by air line, of that point on an airport runway or potential runway included in an airport master plan that is nearest to the site? (Does not apply to school sites acquired prior to January 1, 1966.)

No Significant Hazard. Based on information obtained from the California Department of Transportation, Division of Aeronautics (2019), and a review of area maps and recent aerial photographs, the site is not within two nautical miles of an existing airport or proposed airport runway. The nearest airports are John Wayne Airport located about 9.6 nautical miles to the west, and runway 4/22 at Camp Pendleton located about 15.4 nautical miles to the south. There is no significant hazard from proximity to an airport at the site.

3.9 EXEMPTIONS TO SITING STANDARDS

3.9.1 Is the district seeking any exemptions to the standards found in CCR, Title 5, § 14010(c) through (t)?

No Significant Hazard. Toll Brothers is seeking one exemption to the standards found in CCR, Title 5 § 14010(c) through (t). Toll Brothers is requesting a Power Line Setback Exemption from the California Department of Education for Limited Activity Use within the 25-foot transmission line setback zone along the northwestern boundary of the proposed school site. An electromagnetic fields (EMF) Field Management Plan has been prepared by PlaceWorks (2019c) to minimize potential causes of elevated EMF levels on the school site within the 25-foot setback zone. The mandatory compliance with the Field Management Plan would reduce the potential hazard from elevated EMF levels to less than significant.

3.9.2 If so, has mitigation been identified that demonstrates that the standard may be overridden without compromising a safe and supportive school environment?

No Significant Hazard. This section is not applicable to the project.

3. Environmental Analysis

This page intentionally left blank.

4. Conclusions and Recommendations

Based on the above literature review of geologic and environmental hazards that could potentially be a "fatal flaw" for the site, no known potential geologic or environmental hazards exist at the site that would disqualify the site for the proposed school improvements. The mandatory compliance with the EMF Field Management Plan is required for construction within the 100-foot setback zone along the northwest portion of the proposed school site.

4. Conclusions and Recommendations

This page intentionally left blank.

5. References

5.1 PRINTED REFERENCES

California Department of Transportation (Caltrans), 2014. Public Use Airports, Military Airfields, and Military Bases, January 2014.

California Division of Land Resource Protection, 2014. Orange County Important Farmland 2014, scale 1:100,000.

California Division of Land Resource Protection, 2015. The California Land Conservation Act 2014 Status Report – The Williamson Act, March 2015.

California Geological Survey (CGS), 2000a. Digital Images of Official Maps of Alquist-Priolo Earthquake Fault Zones of California, Southern Region, CD 2000-003.

California Geological Survey (CGS), 2000b. "A General Location Guide for Ultramafic Rocks in California – Areas More Likely to Contain Natural Occurring Asbestos." August 2000.

Jennings, C. W., and W. A. Bryant, 2010. Fault Activity Map of California, California Geological Data Map Series, Map No. 6, scale 1:750,000.

LSA Associates, Inc., 2013. Noise Impact Analysis, Baker Ranch Properties, City of Lake Forest, California, November 2013.

Morton, D. M., 2004. Preliminary Digital Geologic Map of the Santa Ana 30' X 60' Quadrangle, Southern California, Version 2.0, U.S. Geological Survey Open-File Report 99-172, scale 1:100,000.

NMG Geotechnical, Inc., 2016. Project Memorandum: Summary of Geotechnical Issues for Planned Development at Nakase Nursery Property, Lake Forest, California, dated November 18, 2016.

PlaceWorks, 2019a. Health Risk Assessment, Nakase Elementary School for Toll Brothers, dated May 2019.

PlaceWorks, 2019b. Water Pipeline and Tank Safety Hazard Assessment, Nakase Elementary School for Toll Brothers, dated May 2019.

PlaceWorks, 2019c. EMF Study and Field Management Plan, Nakase Elementary School for Toll Brothers, dated May 2019.

United States Geological Survey, 2015. 7.5' Topographic Series, Lake Forest, California Quadrangle Map, scale 1:24,000.

5. References

Van Gosen, B. S., and J. P. Clinkenbeard, 2011. Reported Historic Asbestos Mines, Historic Asbestos Prospects, and Other Natural Occurrences of Asbestos in California, USGS Open-File Report 2011-1188, scale 1:990,000.

Yerkes, R. F., T. H. McCulloch, J. E. Schoellhamer, and J. G. Vedder, 1965. Geology of the Los Angeles Basin, California – An Introduction, United States Geological Survey Professional Paper 420-A.

5.2 RECONNAISSANCE

Site reconnaissance by Dina El Chammas of PlaceWorks on February 8, 2019.

5.3 WEBSITES

Albert Grover Associates, 2010. City of Lake Forest Weekday Average Daily Traffic Volumes Summary, Year 2010, located at http://www.animateddemographics.com/demo/docs/lakeforest/Traffic.pdf.

California Air Resources Board, 2003. Meteorological Wind Roses, Data for the ISCST3 air quality model. https://www.arb.ca.gov/toxics/harp/met/WindRoses.ppt

California Department of Resources, Recycling and Recovery (CalRecycle), 2017. Solid Waste Information System (SWIS) website. https://www2.calrecycle.ca.gov/WhereToRecycle/

California Department of Toxic Substances Control (DTSC), 2019. EnviroStor website. http://www.envirostor.dtsc.ca.gov/public/.

California Department of Transportation, Aeronautics (Caltrans Aviation), 2019. California Aviation Map Viewer https://caltrans.maps.arcgis.com/apps/webappviewer/index.html?id=32c3cbe24491427d872e2fec173a4b22.

California Division of Oil, Gas and Geothermal Resources (DOGGR), 2019. Well Finder website. https://maps.conservation.ca.gov/doggr/wellfinder/#close/-117.66797/33.66295/14

California Geological Survey (CGS), 2001. State of California Seismic Hazard Zones, Lake Forest Quadrangle (Previously El Toro Quadrangle) Official Map, dated January 17, 2001, located at http://gmw.conservation.ca.gov/SHP/EZRIM/Maps/LAKE_FOREST_EZRIM.pdf

California Geological Survey (CGS), 2006. Seismic Hazard Zone Report for the El Toro 7.5-Minute Quadrangle, Orange County, California, revised January 13, 2006. http://gmw.conservation.ca.gov/SHP/EZRIM/Reports/SHZR/SHZR_047_El_Toro.pdf

California Geological Survey (CGS), 2017. Alquist-Priolo Earthquake Fault Zone maps. http://maps.conservation.ca.gov/cgs/informationwarehouse/index.html?map=regulatorymaps.

5. References

California Office of Emergency Services (OES), 2019. Online Dam Inundation Maps, https://water.ca.gov/Programs/All-Programs/Division-of-Safety-of-Dams/Inundation-Maps

City of Lake Forest, 2017. Figure LU-1, Land Use Map https://www.lakeforestca.gov/DocumentCenter/View/393/General-Plan-Land-Use-Map-PDF?bidId=

City of Lake Forest, 2019. City of Lake Forest – Zoning Map located at https://lakeforestca.maps.arcgis.com/apps/webappviewer/index.html?id=e41ab4d5be98473db858a27a458ea509

Google Earth Pro, 2019.

National Pipeline Mapping System (NPMS), 2019. NPMS Public Map Viewer website, https://www.npms.phmsa.dot.gov/PublicViewer/.

Orange County Transportation Agency (OCTA), 2018. 2018 Traffic Flow Map, Orange County, California, https://www.octa.net/pdf/2018-ADT.pdf.

Southern California Air Quality Management District (AQMD), 2019. Facility Information Detail (FIND) database, https://www.aqmd.gov/nav/FIND/facility-information-detail.

State Water Resources Control Board (SWRCB), 2019. GeoTracker database website, http://geotracker.waterboards.ca.gov/.

5. References

This page intentionally left blank.

6. List of Preparers

6.1 LEAD AGENCY

Toll Brothers
715 W. Town & Country Road, Suite 200
Orange, California 92828
Tel: 714.347.1300

6.2 PLACEWORKS

PlaceWorks
2850 Inland Empire Boulevard, Suite B
Ontario, CA 91764
Tel: 909.989.4449
Fax: 909.989.4447

Michael Watson, PG
Associate Geologist

Dwayne Mears, AICP
Principal

6. List of Preparers

This page intentionally left blank

Appendix A - Agency Records

Appendix

This page intentionally left blank.

LAKE FOREST DR, YORBA LINDA, ORANGE

ATTDSOUTH
EMERGENCY
ATT DAMAGE PREVENTION HOTLINE
510-645-2929
VACUUM
AT&T DAMAGE PREVENT HOTLINE
510-645-2929
DESIGN
SUBSTRUCTURE RECORDS REQUEST
CONSTRUCTION & ENGINEERING, CALL FOR MAILING ADDRESS, CA
510-645-2929

COE01
EMERGENCY
SONIA DEVOLDER-FERNANDEZ
714-350-8627
SONIA.DEVOLDER@OCPW.OCGOV.COM
VACUUM
SONIA FERNANDEZ
2301 N GLASSELL ST, ORANGE, CA 92865
714-955-0208
SONIA.DEVOLDER@OCPW.OCGOV.COM
DESIGN
PENNY LEW
P O BOX 4048, SANTA ANA, CA 927024048
714-647-3990
PENNY.LEW@OCPW.OCGOV.COM

COXRSM
EMERGENCY
RNOC
800-290-6623
VACUUM
DEBORAH BORROEL
949-546-2750
DESIGN
THOMAS ELDRED
29947 AVENIDA DE LAS BANDERAS, RANCHO SANTA MARGARITA, CA 92688
949-546-2754
COXFACILITYINQUIRIES@COX.COM

IRW01
EMERGENCY
ED CORRAL
3512 MICHELSON DRIVE, IRVINE, CA 92618
714-231-5227
CORRAL@IRWD.COM
VACUUM
DAVID CROWE
3512 MICHELSON DRIVE, IRVINE, CA 92618
949-453-5769
CROWE@IRWD.COM
DESIGN
DEVELOPMENT SERVICES
15600 SAND CANYON AVE, IRVINE, CA 926197000

LAKEFOREST
EMERGENCY
MATT REAGAN
25550 COMMERCENTRE DR STE 100, LAKE FOREST, CA 92630
949-371-3235
MREAGAN@LAKEFORESTCA.GOV
VACUUM
MATT REAGAN
25550 COMMERCENTRE DR STE 100, LAKE FOREST, CA 92630
949-371-3235
MREAGAN@LAKEFORESTCA.GOV
DESIGN
DAVID PINA
25550 COMMERCENTRE DR STE 100, LAKE FOREST, CA 92630
949-461-3480
DPINA@LAKEFORESTCA.GOV

LVL3CM
EMERGENCY
TECHNICIAN ON DUTY
877-366-8344
VACUUM
TECH ON DUTY
1025 ELDORADO BLVD, BROOMFIELD, CO 80021
877-366-8344
CABLEPROTECTIONMGMT@CENTURYLINK.COM
DESIGN
AREA REPRESENTATIVE
1025 ELDORADO BLVD, BROOMFIELD, CO 80021
877-366-8344
RELO@CENTURYLINK.COM

MCISOCAL
EMERGENCY
FIBER SECURITY DEPT
800-624-9675

VACUUM
MCI OPERATOR
800-289-3427
DESIGN
DEAN BOYERS
400 INTERNATIONAL PKWY, RICHARDSON, TX 75081
469-886-4238
INVESTIGATIONS@VERIZON.COM

SCG2XK
EMERGENCY
LEAD DISPATCHER
800-603-7060
VACUUM
NO PERMISSION REQUIRED
DESIGN
RYAN LOPEZ
1919 STATE COLLEGE BLVD, ANAHEIM, CA 928066114
714-634-5067
RLOPEZ2@SEMPRAUTILITIES.COM

TCAFO
EMERGENCY
SAM RAD
949-410-6298
SRAD@THETOLLROADS.COM
VACUUM
SAM RAD
125 PACIFICA SUITE 100, IRVINE, CA 926183304
949-754-3481
SRAD@THETOLLROADS.COM
DESIGN
SAM RAD
125 PACIFICA SUITE 100, IRVINE, CA 926183304
949-754-3481
SRAD@THETOLLROADS.COM

TCW01
EMERGENCY
TRAVIS JONES
949-858-0277
VACUUM
Information Not Available
DESIGN
NEIL MCKENNA
32003 DOVE CANYON DR, TRABUCO CANYON, CA 92679
949-858-0277

UQSTSO
AFTER HOURS
Information Not Available
VACUUM
Information Not Available
DESIGN
Information Not Available

USCE04
EMERGENCY
SC EDISON PERSONNEL
800-611-1911

VACUUM
GILBERT ACEVES
14005 S. BENSON AVE, CHINO, CA 91710
909-548-7249
GILBERT.ACEVES@SCE.COM
DESIGN
ENGINEERING
909-503-5565

USCETT84SE

EMERGENCY

TCC
800-655-8844
TCCINBOX@SCE.COM

VACUUM

JACK NEILL
2885 W FOOTHILL BLVD, SAN BERNARDINO, CA 92410
909-873-3263
JACK.NEILL@SCE.COM

DESIGN

GILBERT ACEVES
14005 S BENSON AVE, CHINO, CA 91710
909-329-9445
MAPREQUESTS@SCE.COM

WILCON

EMERGENCY

NOC
1200 S. GRAND AVE., LOS ANGELES, CA 90017
213-542-0100
NOC@WILCON.COM

VACUUM

DAVID RAUB
624 S GRAND AVE #2500, LOS ANGELES, CA 90017
213-550-5240
DRAUB@WILCON.COM

DESIGN

NOC
624 S GRAND AVE #1200, LOS ANGELES, CA 90017
213-542-0100
NOC@WILCON.COM

Public Viewer

Map Layers | Query Tools

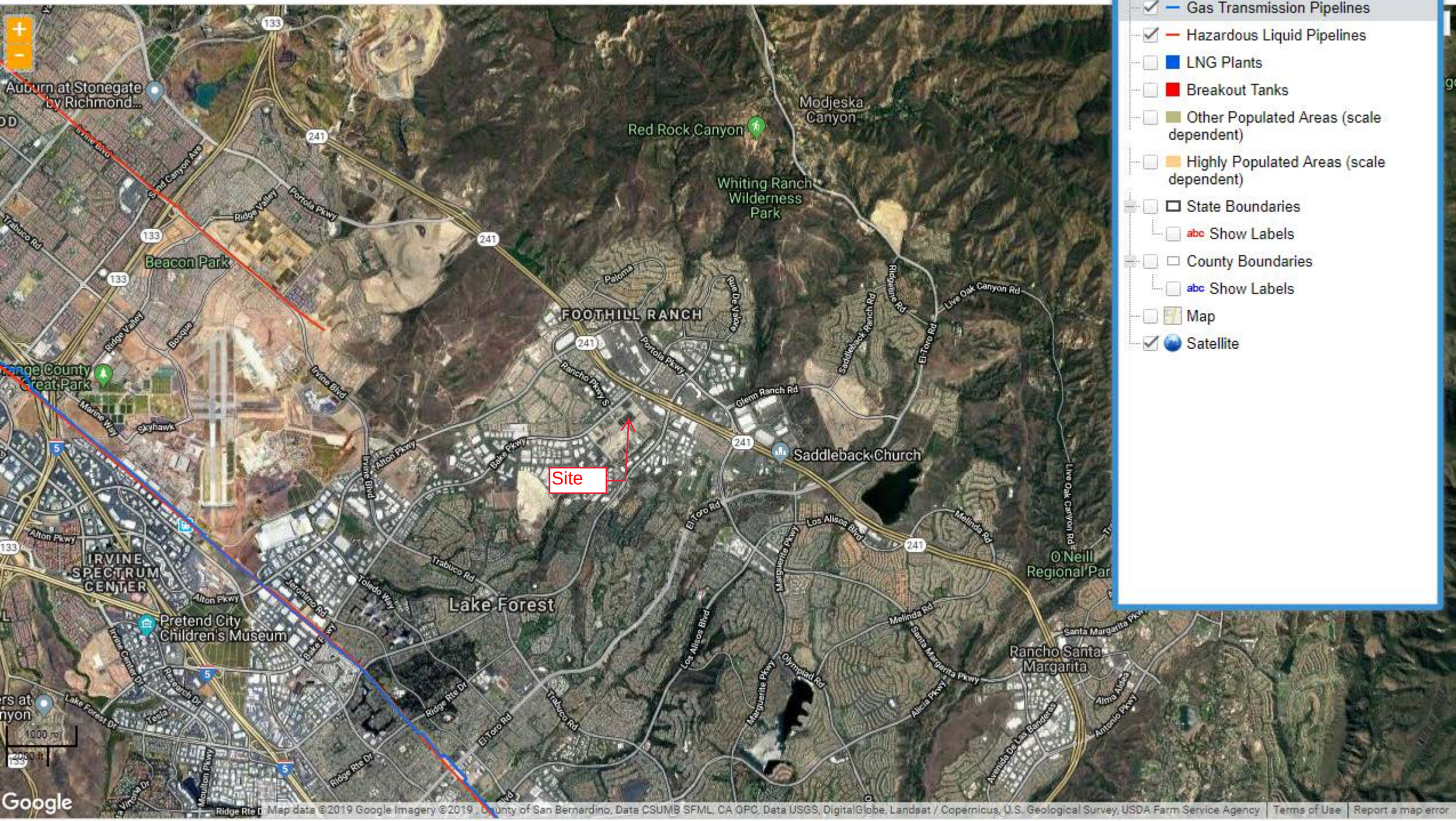

Map Layers

- Accidents (Liquid)
- Incidents (Gas)
- Gas Transmission Pipelines
- Hazardous Liquid Pipelines
- LNG Plants
- Breakout Tanks
- Other Populated Areas (scale dependent)
- Highly Populated Areas (scale dependent)
- State Boundaries
  - Show Labels
- County Boundaries
  - Show Labels
- Map
- Satellite

Ready | Zoom Level: 13 of 19 (1:54,168) | 33.666642, -117.758893 | COUNTY : Orange, CA

©USDOT PHMSA. All rights reserved.

SANTA ANA MOUNTAINS COUNTY WATER DISTRICT

PLANS, PROFILES AND DETAILS

FOR CONSTRUCTION OF

WATER TRANSMISSION SYSTEM

ORANGE COUNTY, CALIFORNIA

PROJECT NO. PFL-CALIF-142

APPROVED BY RESOLUTION NO. 10
BY BOARD OF DIRECTORS
SANTA ANA MOUNTAINS COUNTY WATER DISTRICT

Alexander Bowie
ALEXANDER BOWIE, SECRETARY

BOARD OF DIRECTORS

ROY S. HEAD, PRESIDENT

GRADY H. GLENN
LEONARD E. SCHWENDEMAN
FRANK W. WAER
NICHOLAS A. WEST

JUNE 14, 1963

APPROVED:

Roy S. Head
ROY S. HEAD PRESIDENT
SANTA ANA MOUNTAINS WATER DISTRICT

APPROVED:

J. A. Woolley
J. A. WOOLLEY - CONSULTING ENGINEER AND ASSOCIATES

PREPARED BY

J. A. WOOLLEY

CONSULTING ENGINEER

AND ASSOCIATES

308 WEST FIFTH STREET

SANTA ANA, CALIFORNIA

AS BUILT
AUGUST 1964

DRAWER # 20 PLAN 232

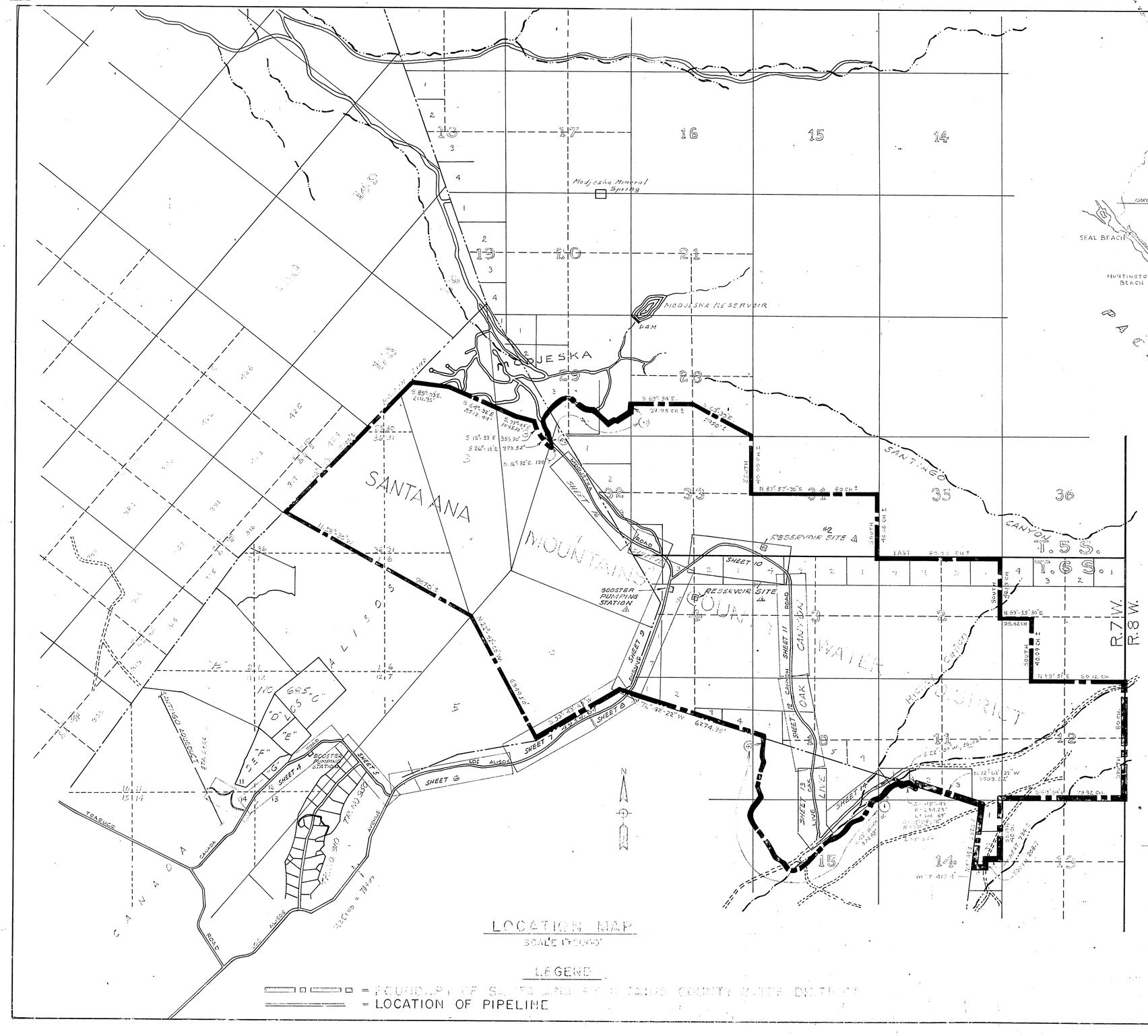

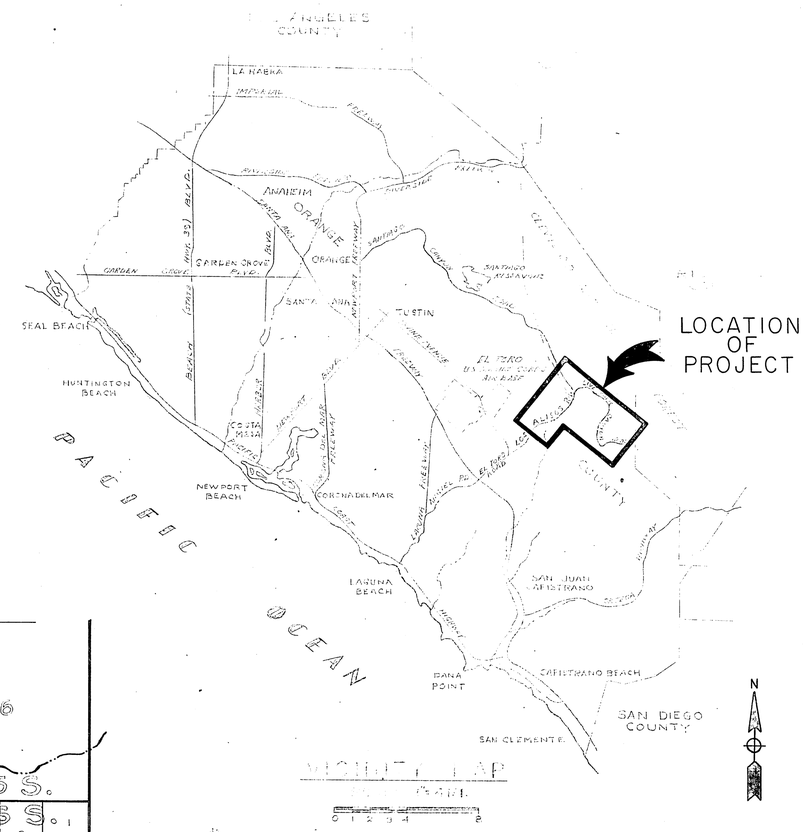

LEGEND

SHEET NO.	SHEET TITLE
1	TITLE SHEET
2	VICINITY MAP AND LOCATION MAP
3	PLAN & PROFILE - STA. 0+00 TO STA. 27+33
4	PLAN & PROFILE - STA. 27+33 TO STA. 85+55
5	PLAN & PROFILE - STA. 85+55 TO STA. 115+85
6	PLAN & PROFILE - STA. 115+85 TO STA. 168+00
7	PLAN & PROFILE - STA. 168+00 TO STA. 206+00
8	PLAN & PROFILE - STA. 206+00 TO STA. 228+00
9	PLAN & PROFILE - STA. 228+00 TO STA. 286+00
10	PLAN & PROFILE - STA. 286+00 TO STA. 336+00
11	PLAN & PROFILE - STA. 336+00 TO STA. 382+00
12	PLAN & PROFILE - STA. 382+00 TO STA. 427+00
13	PLAN & PROFILE - STA. 427+00 TO STA. 465+00
14	PLAN & PROFILE - STA. 465+00 TO STA. 509+00
15	PLAN & PROFILE - STA. 0+00 TO STA. 25+00 LINE 12
16	PLAN & PROFILE - STA. 25+00 TO STA. 62+00 LINE 12
17	TYPICAL DETAILS
18	TYPICAL DETAILS
19	BOOSTER STATION NO. 1 & FILTER STATION
20	BOOSTER PUMP HOUSE NO. 1 DETAILS
21	BOOSTER STATION NO. 2 & ELECTRICAL DETAILS
22	RESERVOIR NO. 1
23	RESERVOIR NO. 2

SANTA ANA MOUNTAINS COUNTY WATER DISTRICT

VICINITY MAP AND LOCATION MAP

J. A. WOOLLEY
CONSULTING ENGINEER
AND ASSOCIATES
308 WEST FIFTH STREET SANTA ANA, CALIFORNIA

DESIGN AHB | DRAWN G.E.J. | APPROVED BY: | SHEET 2 OF 23 SHEETS
CHECKED AHB | DATE AUG. 1963

DRAWER

PROJECT NO. PEL-CALIF. 142

REVISED AUGUST, 1964
AS BUILT AUGUST 1964

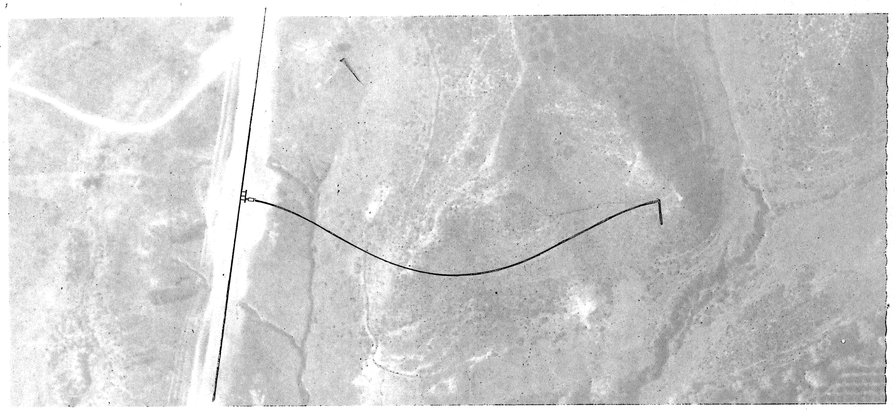

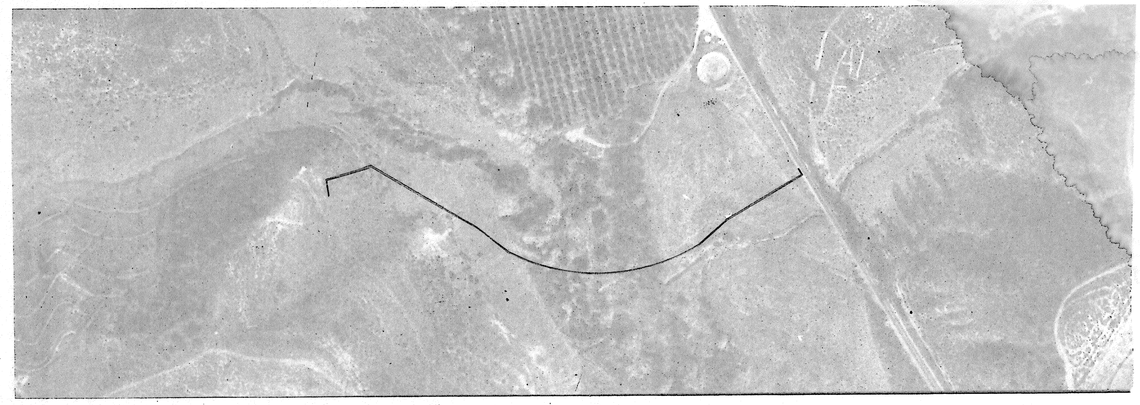

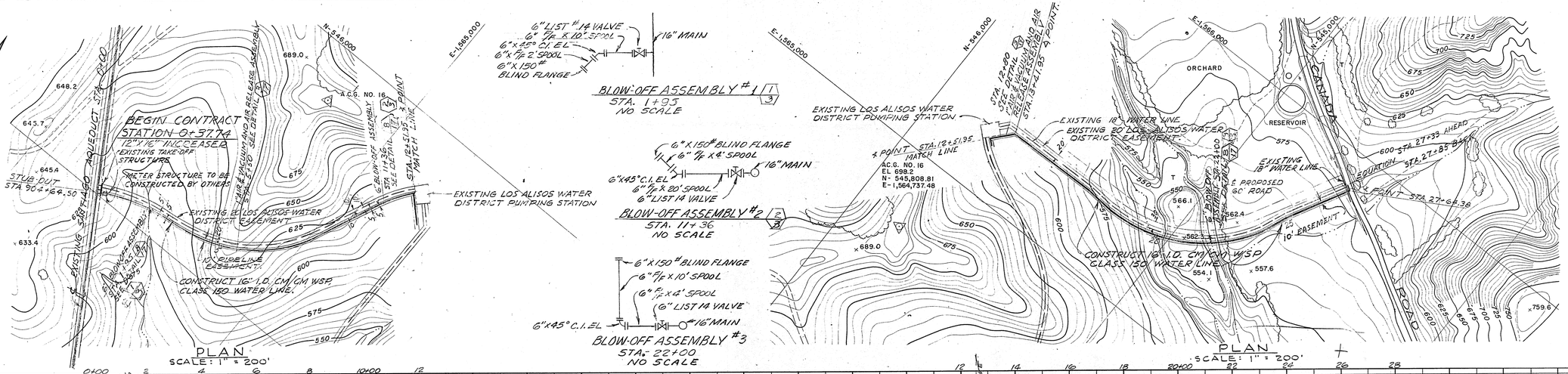

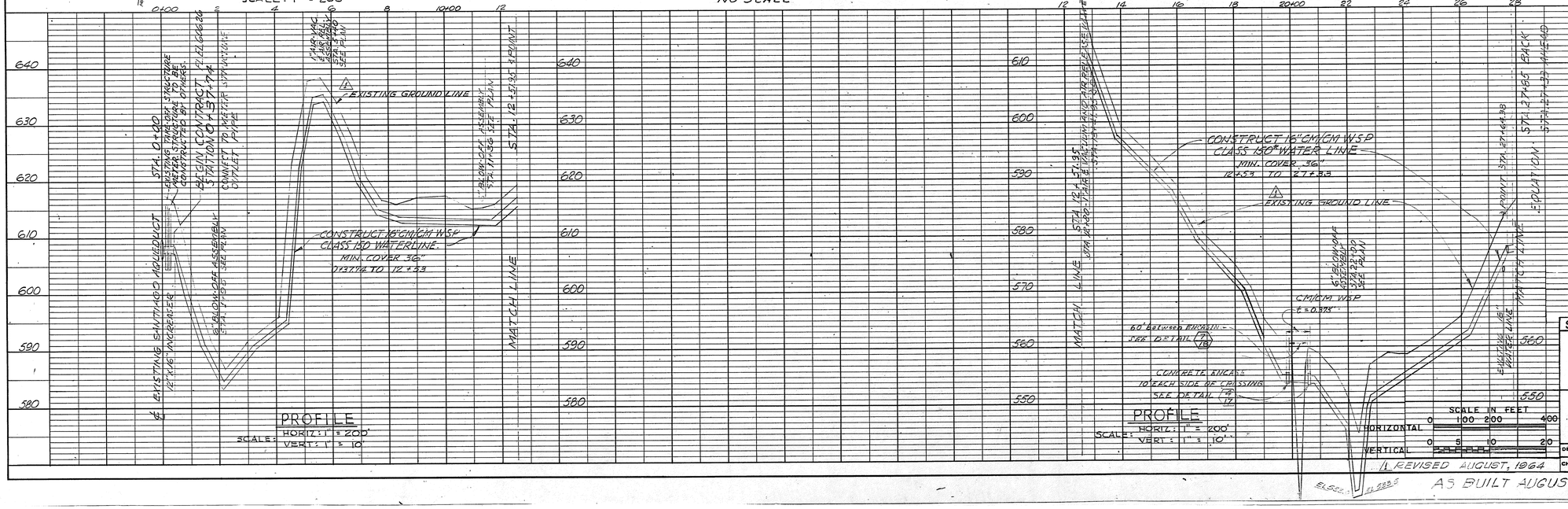

PLAN	BY	DATE
SURVEYED		
PLOTTED		
ALIGNMENT CHECKED		
RT OF WAY CHECKED		
NOTE BOOK		
NO		

PROFILE	BY	DATE
SURVEYED		
PLOTTED		
GRADES CHECKED		
B.M. NOTED		
STRUCTURE NOTATIONS CHKD		
NOTE BOOK		
NO		

SANTA ANA MOUNTAINS COUNTY WATER DISTRICT

PLAN & PROFILE
STA. 0+00 TO STA. 27+33

J. A. WOOLLEY
CONSULTING ENGINEER
AND ASSOCIATES
308 WEST FIFTH STREET — SANTA ANA, CALIFORNIA

DESIGN A.H.B.	DRAWN O.W.R.	APPROVED BY:	SHEET 3
CHECKED R.L.E.	DATE MAY, 1963		OF 23 SHEETS

1 REVISED AUGUST, 1964

AS BUILT AUGUST 1964

PROJECT NO. PEL-CALIF-142

19

PLAN	BY	DATE
SURVEYED		
PLOTTED		
ALIGNMENT CHECKED		
R/T OF WAY CHECKED		
NOTE BOOK		
NO.		

PROFILE	BY	DATE
SURVEYED		
PLOTTED		
GRADES CHECKED		
R/W NOTED		
STRUCTURE NOTATN'S CH KD		
NOTE BOOK		
NO.		

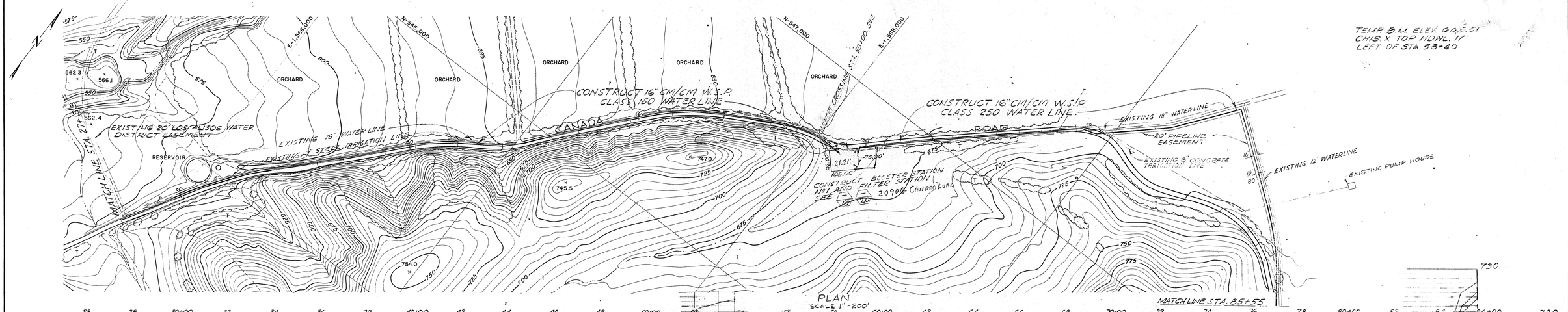

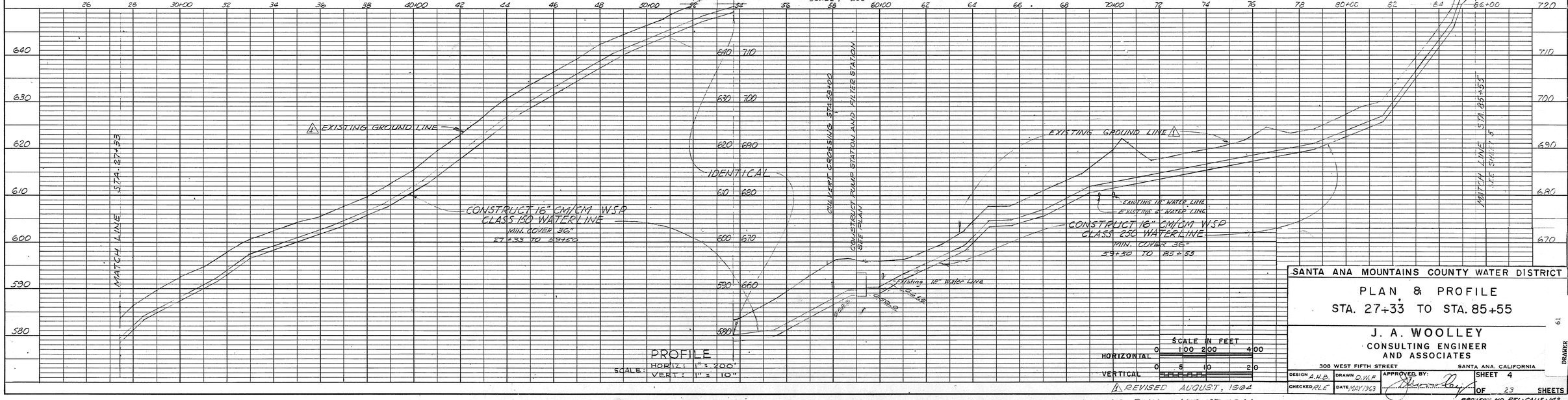

SANTA ANA MOUNTAINS COUNTY WATER DISTRICT

PLAN & PROFILE

STA. 27+33 TO STA. 85+55

J. A. WOOLLEY
CONSULTING ENGINEER
AND ASSOCIATES
308 WEST FIFTH STREET SANTA ANA, CALIFORNIA

DESIGN A.H.B.	DRAWN D.W.F.	APPROVED BY:	SHEET 4
CHECKED R.L.E.	DATE MAY 1963		OF 23 SHEETS

1 REVISED AUGUST, 1964

AS BUILT AUGUST, 1964

PROJECT NO. PFL-CALIF-142

DRAWER 61

CONSTRUCTION PLANS
FOR THE

ZONE II PHASE IV
WEST TRANSMISSION MAINS
LOS ALISOS WATER DISTRICT

ORANGE COUNTY CALIFORNIA

AUGUST 1979

1968 WATER BONDS SERIES 3

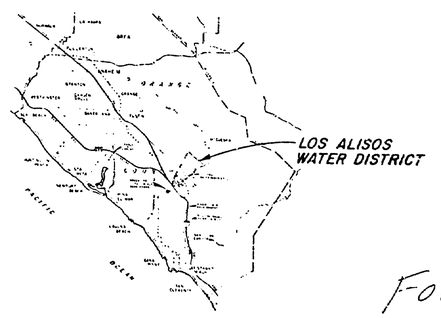

E. T. McFadden
GENERAL MANAGER E. T. McFADDEN
L.A.W.D.

R. Patrick Kelly 10/11/79
PROJECT ENGINEER R. PATRICK KELLY
C.E. 27077

Victor E. Opincar 10/11/79
DISTRICT ENGINEER VICTOR E. OPINCAR JR.
C.E. 20036

FOR AS BUILTS
DO NOT REMOVE
FROM THIS OFFICE
[illegible]

PREPARED IN THE OFFICE
OF

Boyle Engineering Corporation
1501 Quail Street
P O Box 3030
Newport Beach, California 92663
714 752-0505

△ ADDENDUM NO. 2 11-2-79
△ ADDENDUM NO. 1 10-25-79

D-2053 B-L04-125-06 SHEET 1 OF 23

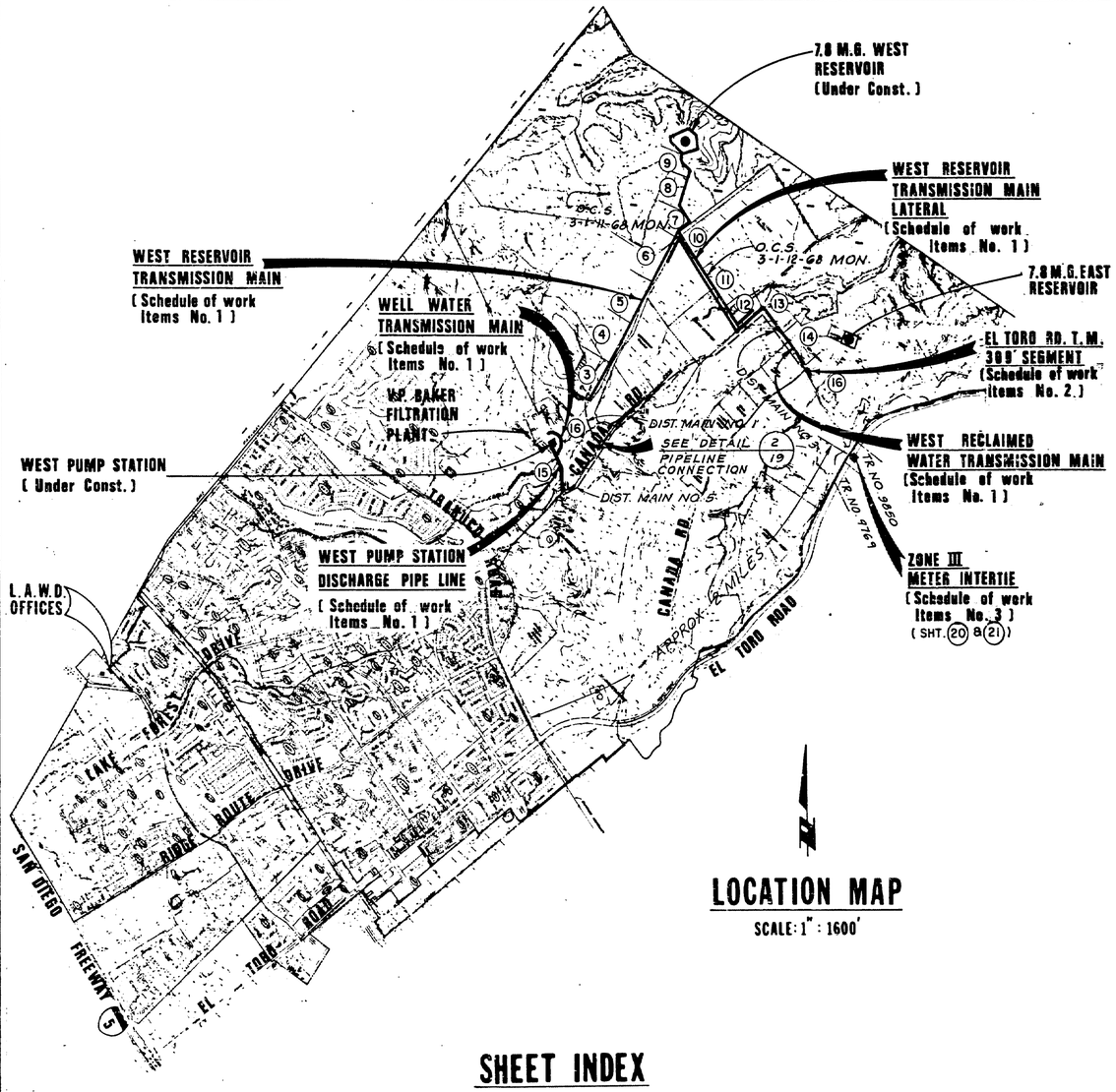

LOCATION MAP

SCALE: 1" : 1600'

LEGEND

THE FOLLOWING SYMBOLS AND ABBREVIATIONS HAVE BEEN USED UNLESS OTHERWISE NOTED

	INSTALL WATER TRANSMISSION MAIN (SIZE AS INDICATED)
—C—	TRAFFIC SIGNAL CONDUIT
—E—	ELECTRICAL CONDUIT
—3" G—	EXISTING GAS LINE (SIZE AS INDICATED)
—8" S—	EXISTING SEWER PIPE (SIZE AS INDICATED)
—18" SD—	EXISTING STORM DRAIN (SIZE AS INDICATED)
—T—	EXISTING TELEPHONE CABLE / DUCT
—4" W—	EXISTING WATER LINE (SIZE AS INDICATED)
	EXISTING MANHOLE / VAULT
	EXISTING WATER / GAS VALVE
	EXISTING ANCHOR / GUY WIRE
	EXISTING FENCE (TYPE AS INDICATED)
	EXISTING CURB & GUTTER
	EXISTING RAILROAD
	EDGE OF PAVEMENT
	RIGHT OF WAY LINE (R/W)
	CITY BOUNDARY
	SURVEY MONUMENT
	FIRE HYDRANT (F H)
	LIGHT STANDARD (L S)
	POWER POLE / TELEPHONE POLE (P P / T P)
	TRAFFIC CONTROL BOX (T C B)
	WATER METER (W M)
	GAS METER (G M)
A C P	ASBESTOS CEMENT PIPE
ABAN	ABANDONED
A C	ASPHALT CONCRETE
C B	CATCH BASIN
C M P	CORRUGATED METAL PIPE
C O	CLEANOUT
CONC	CONCRETE
DWY	DRIVEWAY
ELEV	ELEVATION
F L	FLOW LINE
F M S	FORCE MAIN SEWER
FUT	FUTURE
HDWL	HEADWALL
H L	SEWER HOUSE LATERAL
INV	INVERT
I P	IRON PIPE
IRR	IRRIGATION WATER LINE
MH	MANHOLE
PVMT	PAVEMENT
R C B	REINFORCED CONCRETE BOX
R C P	REINFORCED CONCRETE PIPE
S	SLOPE IN FEET PER FOOT
SPEC'S	SPECIFICATIONS
STA	STATION
STD	STANDARD
V C P	VITRIFIED CLAY PIPE
W W	WASTE WATER
1	DENOTES DETAIL NUMBER
2	DENOTES SHEET NUMBER
G B	GRADE BREAK

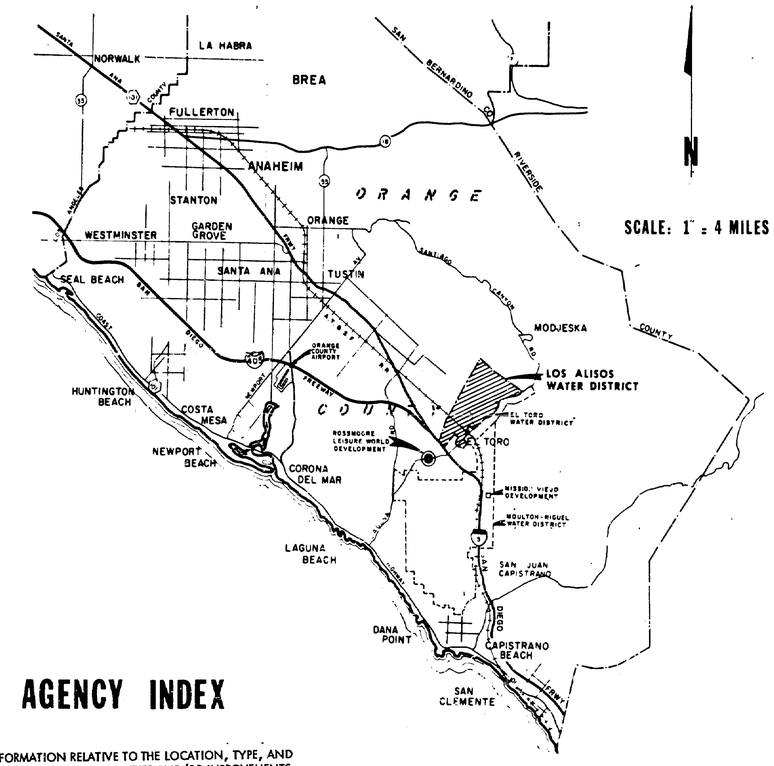

VICINITY MAP

AGENCY INDEX

ALL INFORMATION RELATIVE TO THE LOCATION, TYPE, AND OPERATIONAL STATUS OF UTILITIES AND/OR IMPROVEMENTS WHICH APPEAR ON THESE PLANS WAS PROVIDED BY THE FOLLOWING RESPECTIVE OWNERS OR AGENCIES:

NAME	ABBREVIATION	TELEPHONE
LOS ALISOS WATER DISTRICT P.O. BOX 595 EL TORO, CA 92630	LAWD	833-0580
SANTA ANA MOUNTAINS COUNTY WATER DISTRICT STAR ROUTE 1048 ORANGE, CA 92667	SAMCWD	586-0723
ENVIRONMENTAL MANAGEMENT AGENCY 400 CIVIC CENTER DRIVE WEST SANTA ANA, CA 92701	EMA	834-3456
PACIFIC TELEPHONE AND TELEGRAPH COMPANY 23331 EL TORO ROAD, ROOM 204 EL TORO, CA 92630	PT & T	645-8752
SOUTHERN CALIFORNIA EDISON COMPANY 22641 CANADA ROAD EL TORO, CA 92630	SCE	835-3833
SOUTHERN CALIFORNIA GAS COMPANY 1919 SOUTH STATE COLLEGE BLVD. ANAHEIM, CA 92805	SCG	634-0211
UNDERGROUND SERVICE ALERT	USA	1-800-422-4133**

**NOTIFY 48 HOURS PRIOR TO EXCAVATION

BENCHMARK

STAMPING 3E-61-71 ALUMINUM CAP 1971 ELEVATION 444.561

ABOUT 1 MILE NORTHWEST ALONG TRABUCO ROAD, FROM THE INTERSECTION OF EL TORO ROAD AND ABOUT 0.2 OF A MILE NORTHWEST ALONG TRABUCO, FROM THE INTERSECTION OF CANADA ROAD, TO A CONCRETE BRIDGE OVERCROSSING OF SERRANO CREEK; 16 FEET NORTHEAST OF THE CENTERLINE OF TRABUCO, SET IN THE TOP OF THE NORTHEAST END OF CONCRETE RETAINING WALL OF BRIDGE LEVEL WITH THE ROAD.

BASIS OF BEARINGS

THE BEARING BETWEEN ORANGE COUNTY SURVEY MONUMENTS: 3-1-11-68 and 3-2-12-68, BEING NORTH 56° 36' 39" WEST.
PER 9-1-71 DATUM.

SHEET INDEX

	SHEET NO.	DESCRIPTION
	1	TITLE
	2	INDEX & VICINITY MAP
	3	WEST RESERVOIR TRANSMISSION MAIN - PLAN & PROFILE
	4	WEST RESERVOIR TRANSMISSION MAIN - PLAN & PROFILE
	5	WEST RESERVOIR TRANSMISSION MAIN - PLAN & PROFILE
	6	WEST RESERVOIR TRANSMISSION MAIN & WEST RECLAIMED WATER TRANSMISSION MAIN - PLAN & PROFILE
	7	WEST RESERVOIR TRANSMISSION MAIN - PLAN & PROFILE
SCHEDULE OF WORK ITEMS NO. 1	8	WEST RESERVOIR TRANSMISSION MAIN - PLAN & PROFILE
	9	WEST RESERVOIR TRANSMISSION MAIN - PLAN & PROFILE
	10	WEST RESERVOIR T.M. LATERAL & WEST RECLAIMED WATER T.M. - PLAN & PROFILE
	11	WEST RESERVOIR T.M. LATERAL & WEST RECLAIMED WATER T.M. - PLAN & PROFILE
	12	WEST RESERVOIR T.M. LATERAL & WEST RECLAIMED WATER T.M. - PLAN & PROFILE
	13	WEST RECLAIMED WATER TRANSMISSION MAIN - PLAN & PROFILE
	14	WEST RECLAIMED WATER TRANSMISSION MAIN - PLAN & PROFILE
	15	WEST PUMP STATION DISCHARGE LINE - PLAN & PROFILE
SCHEDULE OF WORK ITEMS NO. 1 & 2	16	WELL WATER TRANSMISSION MAIN & EL TORO RD. 300' SEGMENT - PLAN & PROFILE
	17	DETAILS
	18	DETAILS
	19	DETAILS
	20	DETAILS
SCHEDULE OF WORK ITEMS NO. 3	21	ZONE III METER INTERTIE
	22	ZONE III METER INTERTIE
△ SCH. ITEMS NO. 1	23	DETAILS

LOS ALISOS WATER DISTRICT
ORANGE COUNTY CALIFORNIA

WEST TRANSMISSION MAINS
LOCATION AND VICINITY MAP

REV	DATE	DESCRIPTION	APP
△	10/24/79	ADDENDUM NO. 1 REVISION	P.R.K.

DESIGN R.P.K. DRAWN J.C. CHECKED R.P.K.
Boyle Engineering Corporation — consulting engineers / architects
DATE AUG. 1979 FB X-43 B-L04-125-06 D-2053
SHEET NO. 2 OF 23 SHEETS

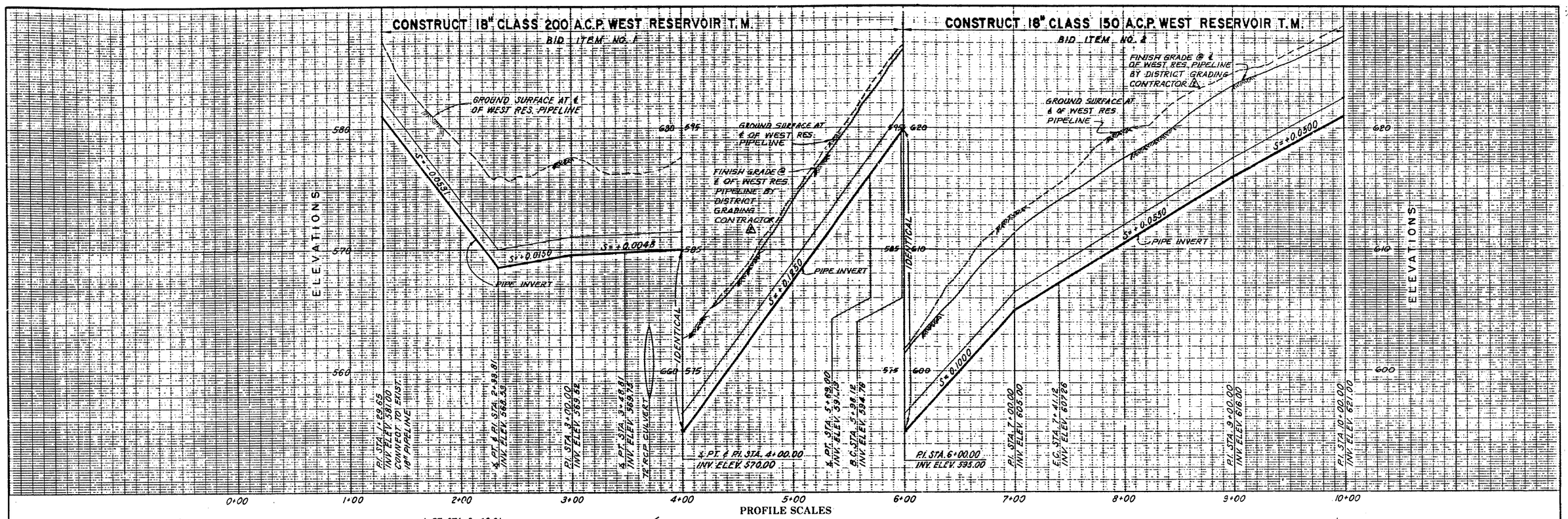

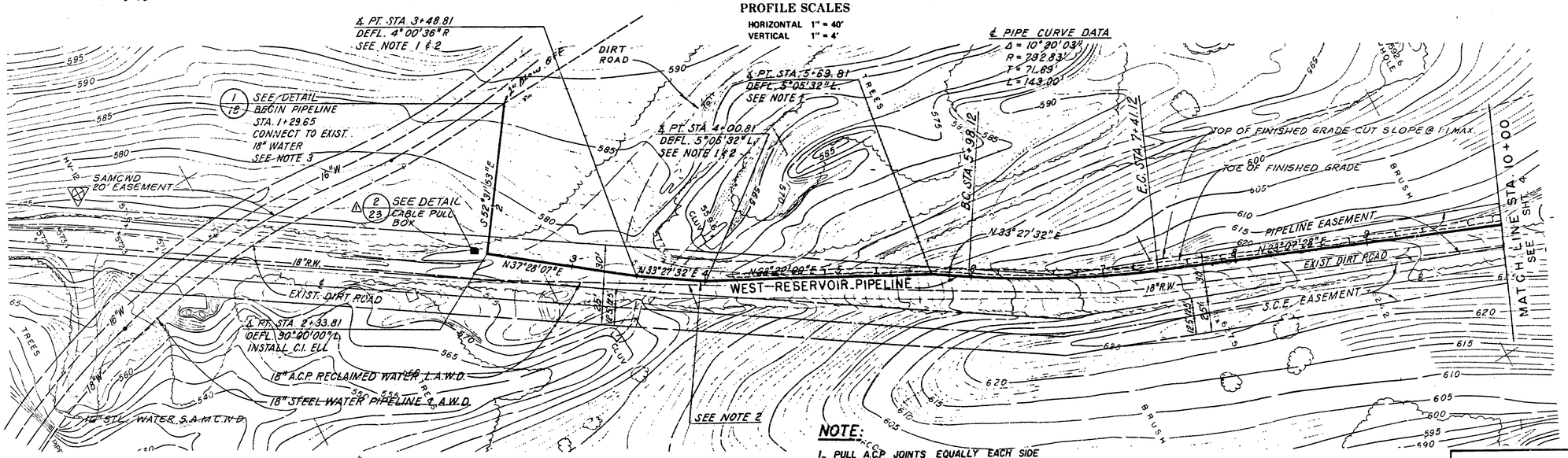

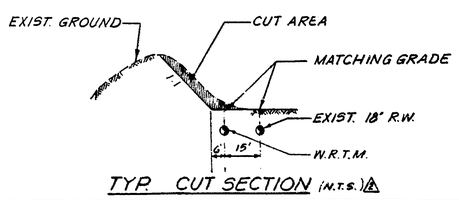

TYP. CUT SECTION (N.T.S.)

PLAN SCALE: 1" = 40'

NOTE:

1. PULL A.C.P. JOINTS EQUALLY EACH SIDE TO MEET ALIGNMENT. USE 13'-0" LENGTHS A.C.P.
2. A MINIMUM OF 5' WILL BE MAINTAINED BETWEEN WEST RESERVOIR PIPELINE AND EXISTING RECLAIMED WATER LINE. CONTRACTOR WILL CONFIRM LOCATION OF EXIST. PIPELINE.
3. CONTRACTOR SHALL POTHOLE AND VERIFY EXIST. 18" PIPELINE LOCATION AND INVERT BEFORE CONST. AS NOTED IN THE SPECIFICATIONS SECTION 3, PART II, OF SPECIAL PROVISIONS.

REV	DATE	DESCRIPTION	APP
2	11-2-79	ADDENDUM NO. 2 REVISION	R.P.K.
1	10/25	ADDENDUM NO 1 REVISION	R.P.K.

LOS ALISOS WATER DISTRICT
ORANGE COUNTY, CALIFORNIA

WEST TRANSMISSION MAINS
WEST RESERVOIR
TRANSMISSION MAIN
PLAN & PROFILE

DESIGN D.M. | DRAWN J.C. | CHECKED R.P.K | DATE AUG. 1979 | F.B. X-43

Boyle Engineering Corporation
consulting engineers / architects

B-L04-125-06 | D-2053

SHEET NO. 3 OF 23 SHEETS

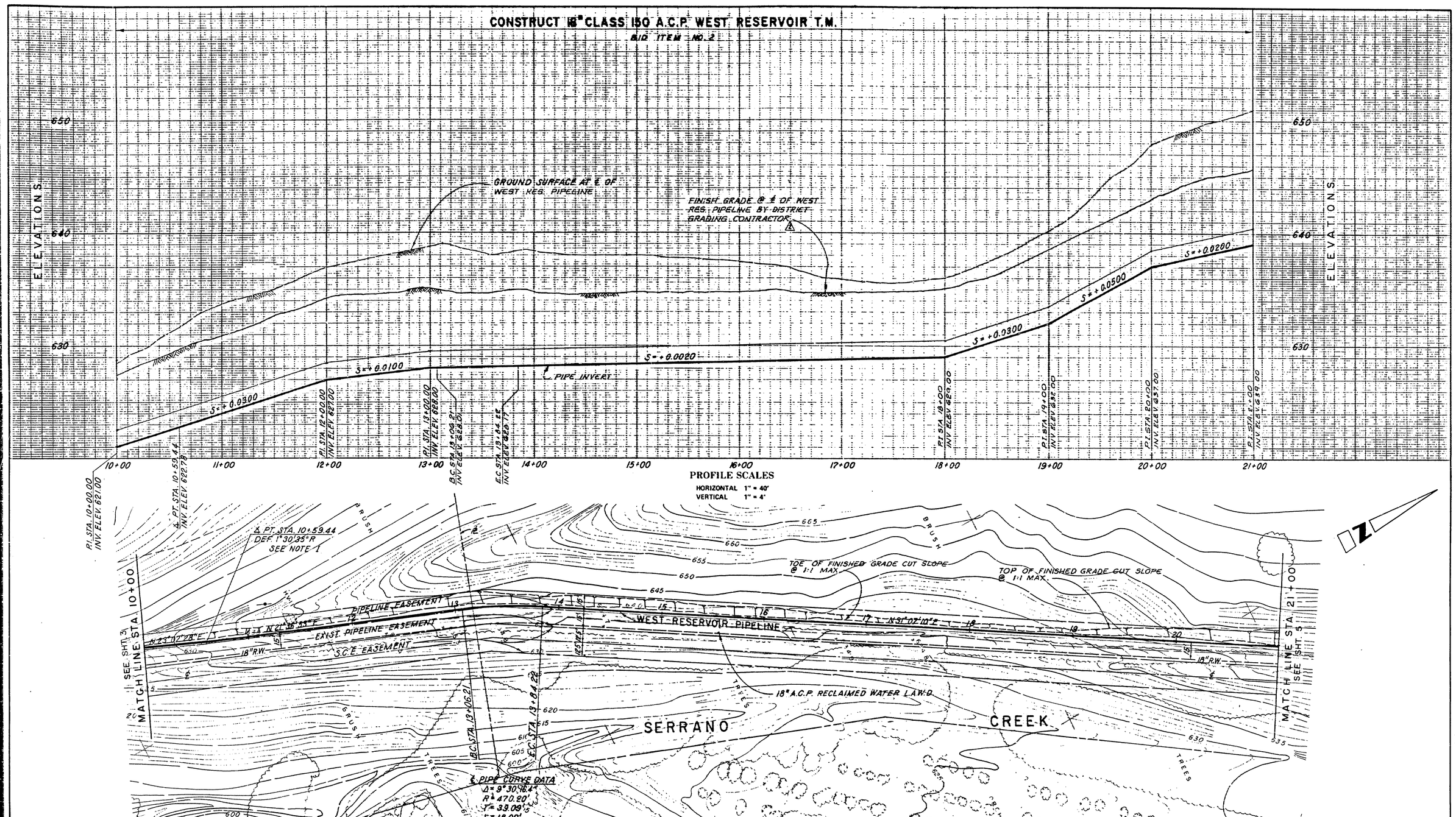

NOTE:

1. PULL A.C.P. JOINTS EQUALLY EACH SIDE TO MEET ALIGNMENT. USE 13'-0" LENGTHS OF A.C.P.

PLAN SCALE: 1" = 40'

LOS ALISOS WATER DISTRICT
ORANGE COUNTY, CALIFORNIA

WEST TRANSMISSION MAINS
WEST RESERVOIR
TRANSMISSION MAIN
PLAN & PROFILE

REV	DATE	DESCRIPTION	APP
2	11-2-79	ADDENDUM NO. 2 REVISION	R.P.K.

DESIGN D.M. DRAWN J.C. CHECKED R.P.K. DATE AUG. 1979 F.B. X-43

Boyle Engineering Corporation
consulting engineers / architects

B-L04-125-06 D-2053

SHEET NO. 4 OF 23 SHEETS

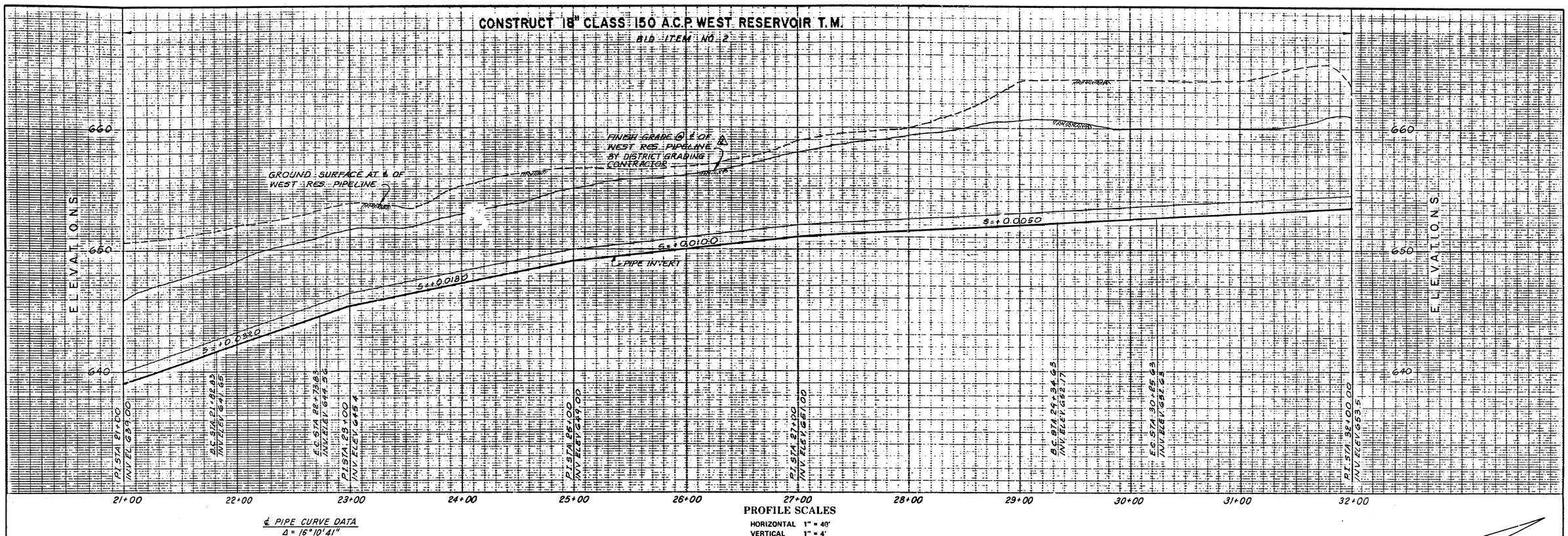

LOS ALISOS WATER DISTRICT
ORANGE COUNTY, CALIFORNIA

WEST TRANSMISSION MAINS
WEST RESERVOIR
TRANSMISSION MAIN
PLAN & PROFILE

REV	DATE	DESCRIPTION	APP
4	11-2-79	ADDENDUM NO. 2 REVISION	R.P.K.

DESIGN D.M.
DRAWN J.C.
CHECKED R.P.K.
DATE AUG. 1979
F.B. X-43
B-L04-125-06
D-2053
Boyle Engineering Corporation
consulting engineers / architects
SHEET NO. 5 OF 23 SHEETS

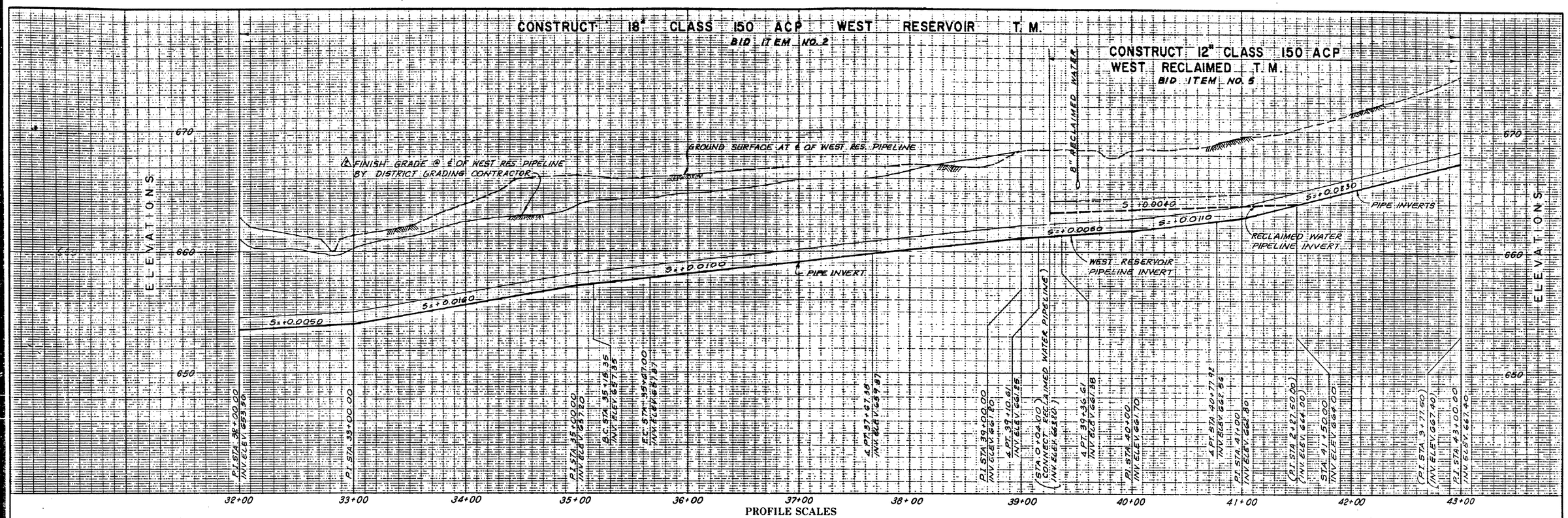

PROFILE SCALES

HORIZONTAL 1" = 40'
VERTICAL 1" = 4'

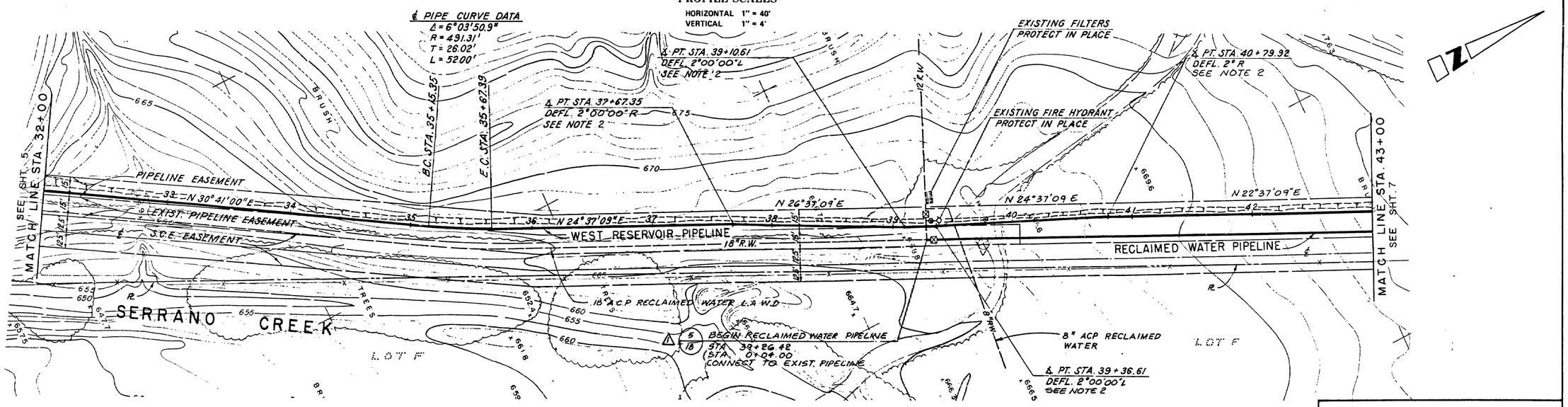

NOTE:

1. RECLAIMED WATER TRANSMISSION MAIN STATIONING IN PARENTHESIS THIS PAGE.
2. PULL A.C.P. JOINTS EQUALLY EACH SIDE TO MEET ALIGNMENT.
3. CONTRACTOR SHALL POTHOLE AND VERIFY EXIST. 18" PIPELINE LOCATION & INVERT BEFORE CONSTRUCTION AS NOTED IN THE SPECIFICATIONS SECTION 3, PART II OF SPECIAL PROVISIONS.

PLAN SCALE: 1" = 40'

LOS ALISOS WATER DISTRICT
ORANGE COUNTY, CALIFORNIA

WEST TRANSMISSION MAINS
WEST RESERVOIR T. M.
WEST RECLAIMED WATER T. M.
PLAN & PROFILE.

REV	DATE	DESCRIPTION	APP
2	11-2-79	ADDENDUM NO. 2 REVISION	R.P.K.
1	10/24/79	ADDENDUM NO. 1 REVISION	R.P.K.

DESIGN D.M. DRAWN J.C. CHECKED R.P.K. DATE AUG. 1979 F.B. X-43

Boyle Engineering Corporation
consulting engineers / architects

B-L04-125-06 D-2053

SHEET NO. 6 OF 23 SHEETS

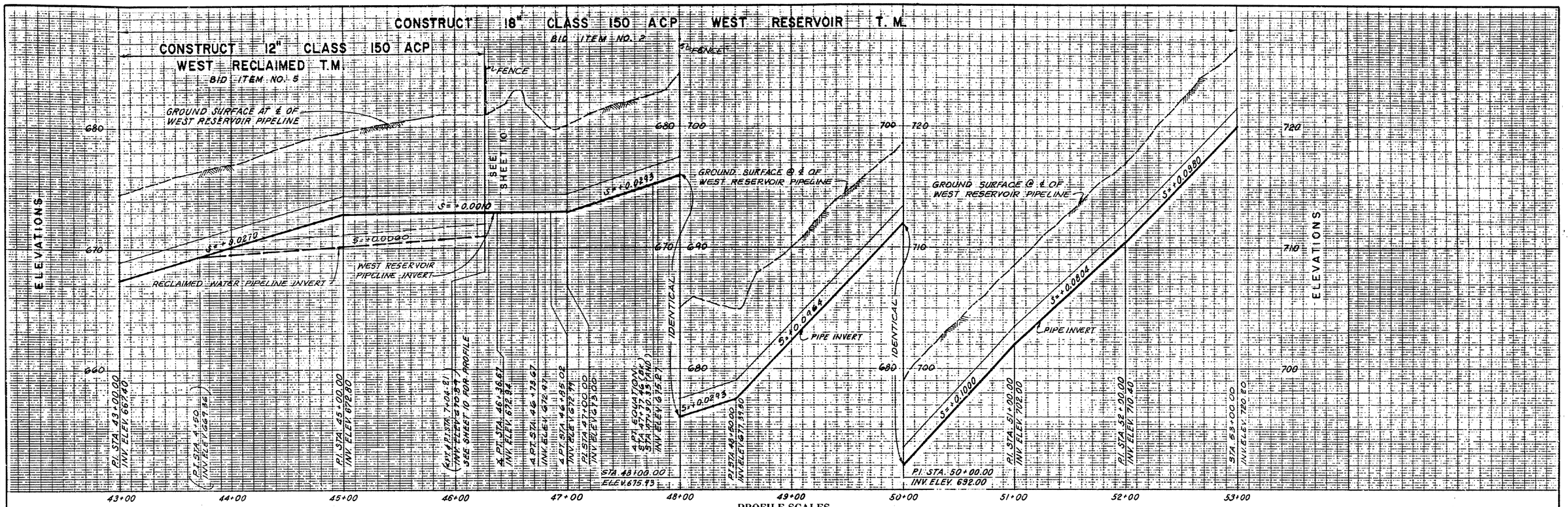

PROFILE SCALES

HORIZONTAL 1" = 40'
VERTICAL 1" = 4'

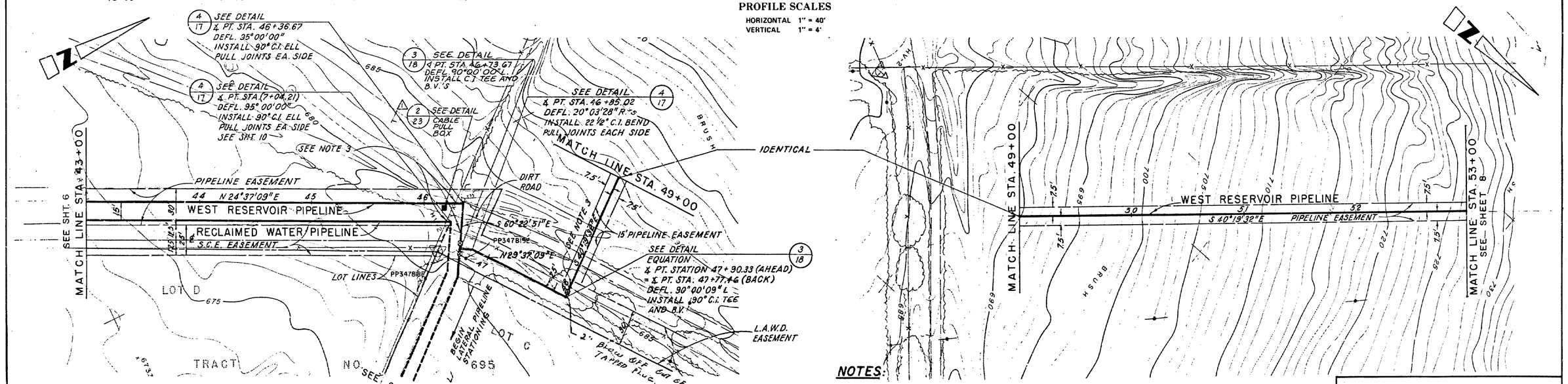

NOTES:

1 - RECLAIMED WATER TRANSMISSION MAIN PIPELINE STATIONING IN PARENTHESIS THIS PAGE.

2 - PULL ACP JOINTS EQUALLY EACH SIDE TO MEET ALIGNMENT. USE 13'-0" LENGTHS OF ACP.

3 - REMOVE & RESTORE FENCE TO ORIGINAL CONDITION TO ACCOMMODATE PIPELINE CONSTRUCTION.

PLAN SCALE: 1" = 40'

LOS ALISOS WATER DISTRICT
ORANGE COUNTY, CALIFORNIA

WEST TRANSMISSION MAINS
WEST RESERVOIR T.M.
WEST RECLAIMED WATER T.M.
PLAN & PROFILE

REV	DATE	DESCRIPTION	APP
1	10/26	ADDENDUM NO. 1 REVISION	R.P.K.

DESIGN D.M.
DRAWN J.C.
CHECKED R.P.K.
Boyle Engineering Corporation
consulting engineers / architects
DATE AUG. 1979
F.B. X-43
B-L04-125-06
D-2053
SHEET NO 7 OF 23 SHEETS

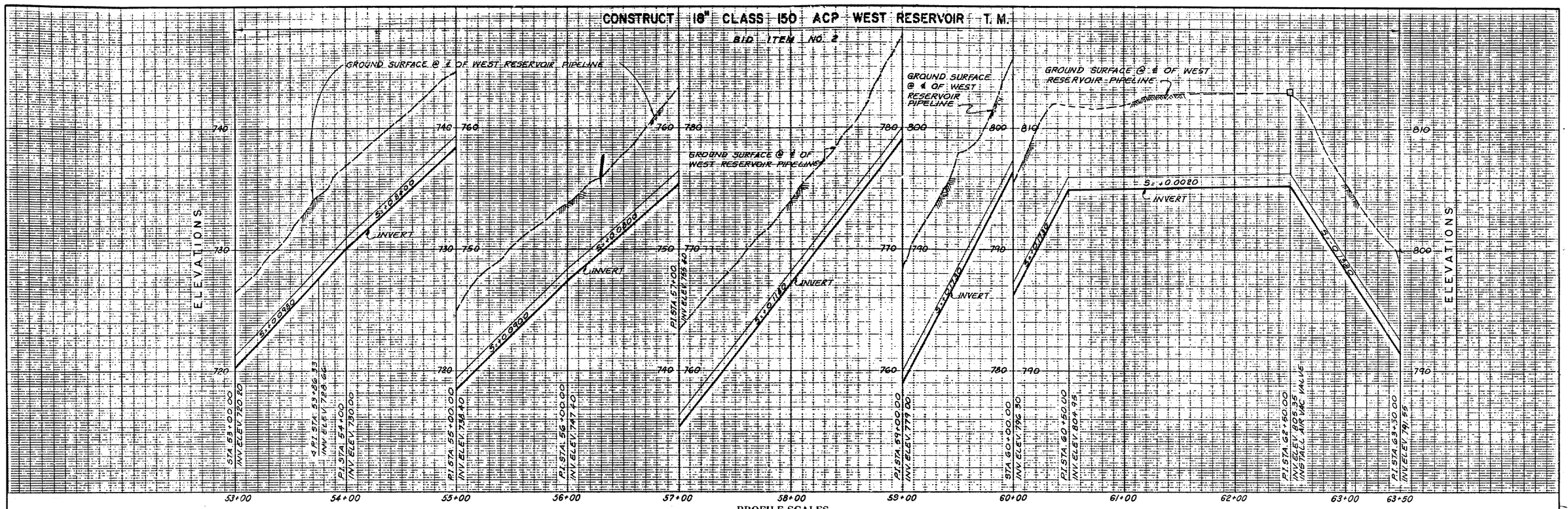

PROFILE SCALES

HORIZONTAL 1" = 40'
VERTICAL 1" = 4'

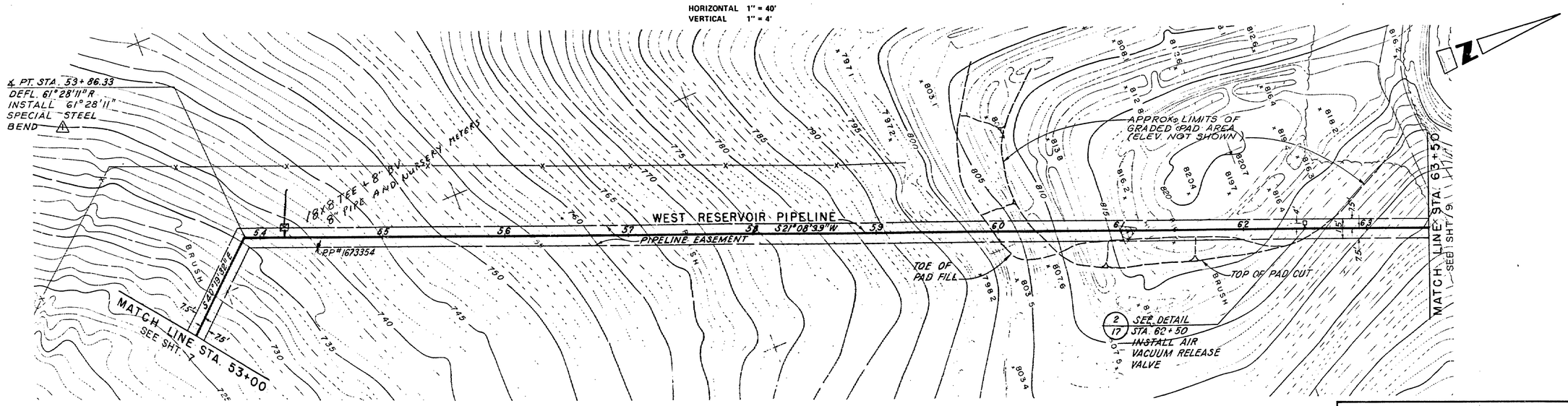

PLAN SCALE: 1" = 40'

LOS ALISOS WATER DISTRICT
ORANGE COUNTY, CALIFORNIA

WEST TRANSMISSION MAINS
WEST RESERVOIR
TRANSMISSION MAIN
PLAN & PROFILE

REV	DATE	DESCRIPTION	APP
1	10/24/79	ADDENDUM NO. 1 REVISION	RPK

DESIGN D.M.
DRAWN J.C.
CHECKED R.P.K.
DATE AUG. 1979
F.B. X-43

Boyle Engineering Corporation
consulting engineers / architects

8-L04-125-06 D-2053

SHEET NO. 8 OF 23 SHEETS

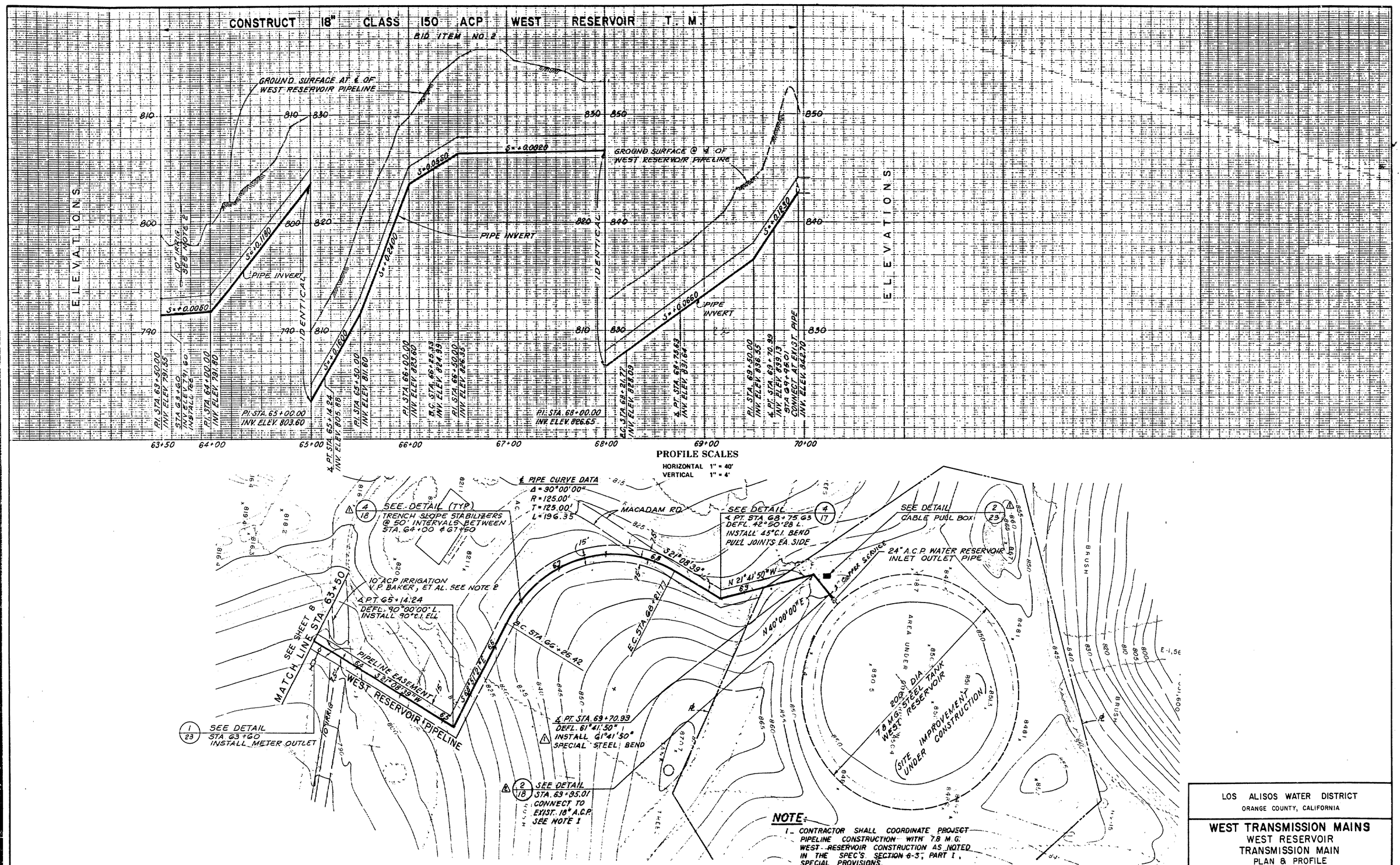

NOTE:

1. CONTRACTOR SHALL COORDINATE PROJECT PIPELINE CONSTRUCTION WITH 7.8 M.G. WEST RESERVOIR CONSTRUCTION AS NOTED IN THE SPEC'S. SECTION 6-3, PART I, SPECIAL PROVISIONS.
2. CONTRACTOR SHALL POTHOLE AND VERIFY EXIST. 10" IRRIG. PIPELINE LOCATION AND INVERT BEFORE CONSTRUCTION.

REV	DATE	DESCRIPTION	APP
2	11-2-79	ADDENDUM NO. 2 REVISION	R.P.K.
1	10-24-79	ADDENDUM NO. 1 REVISION	RPK

LOS ALISOS WATER DISTRICT
ORANGE COUNTY, CALIFORNIA

WEST TRANSMISSION MAINS
WEST RESERVOIR
TRANSMISSION MAIN
PLAN & PROFILE

Boyle Engineering Corporation
consulting engineers / architects

DESIGN D.M. | DRAWN J.C. | CHECKED R.P.K. | DATE AUG. '79 | # X-43 | B-L04-125-06 | D-2053

SHEET NO. 9 OF 23 SHEETS

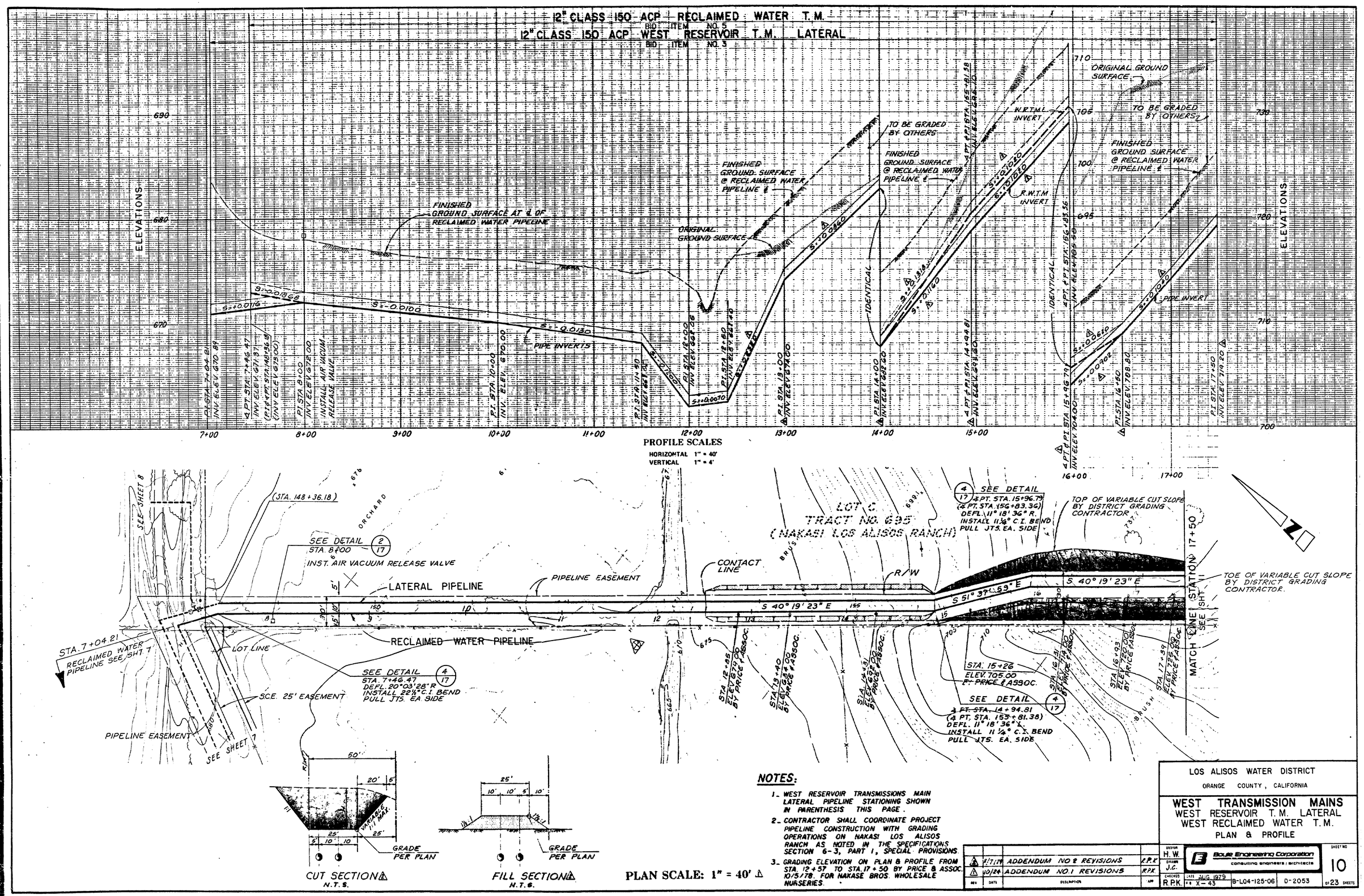

NOTES:

1. WEST RESERVOIR TRANSMISSIONS MAIN LATERAL PIPELINE STATIONING SHOWN IN PARENTHESIS THIS PAGE.
2. CONTRACTOR SHALL COORDINATE PROJECT PIPELINE CONSTRUCTION WITH GRADING OPERATIONS ON NAKASI LOS ALISOS RANCH AS NOTED IN THE SPECIFICATIONS SECTION 6-3, PART 1, SPECIAL PROVISIONS.
3. GRADING ELEVATION ON PLAN & PROFILE FROM STA. 12+57 TO STA. 17+50 BY PRICE & ASSOC. 10/5/78. FOR NAKASE BROS. WHOLESALE NURSERIES.

REV.	DATE	DESCRIPTION	APP.
2	2/7/79	ADDENDUM NO 2 REVISIONS	R.P.K.
1	10/24	ADDENDUM NO. 1 REVISIONS	R.P.K.

LOS ALISOS WATER DISTRICT
ORANGE COUNTY, CALIFORNIA

WEST TRANSMISSION MAINS
WEST RESERVOIR T.M. LATERAL
WEST RECLAIMED WATER T.M.
PLAN & PROFILE

Boyle Engineering Corporation
consulting engineers / architects

DESIGN H.W.
DRAWN J.C.
CHECKED R.P.K.
DATE AUG. 1979
F.B. X-43
B-L04-125-06
D-2053
SHEET NO. 10 OF 23 SHEETS

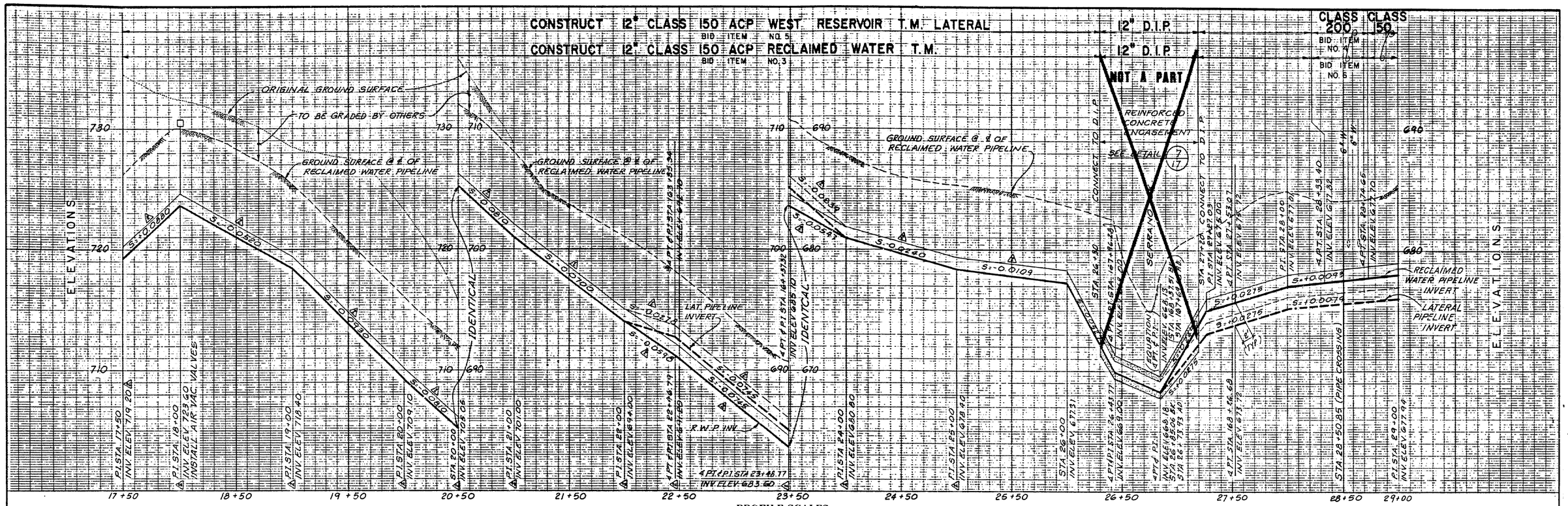

PROFILE SCALES

HORIZONTAL 1" = 40'
VERTICAL 1" = 4'

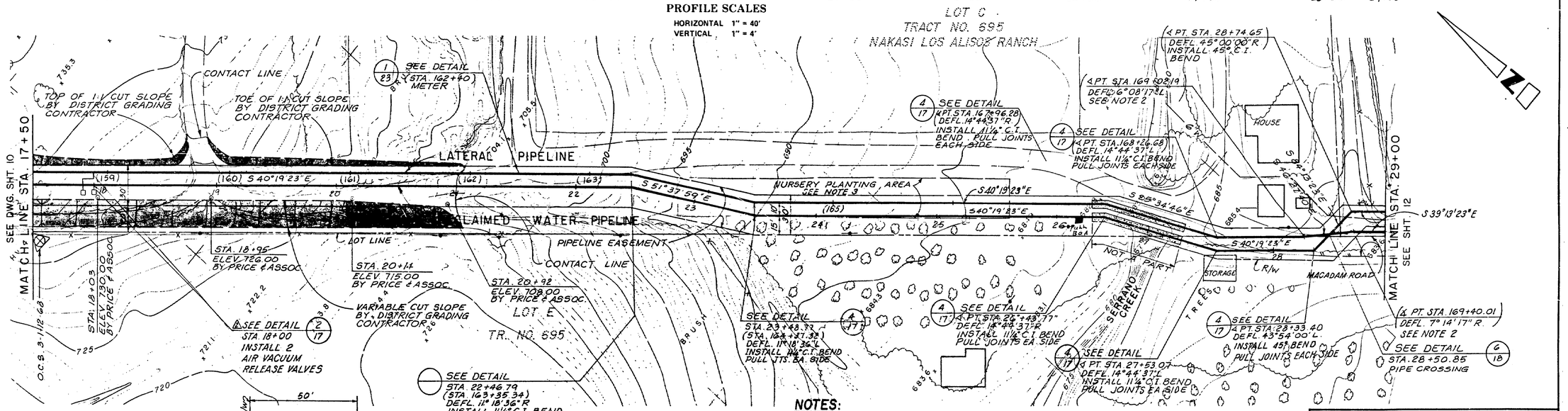

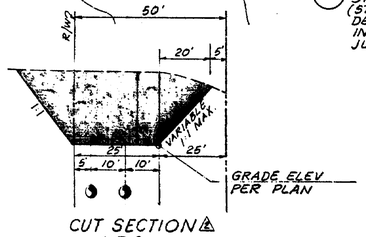

CUT SECTION
N.T.S.

PLAN SCALE: 1" = 40'

NOTES:

1. WEST RESERVOIR T. M. LATERAL STATIONING PIPELINE IN PARENTHESIS THIS PAGE.
2. PULL ACP JOINTS EQUALLY EACH SIDE TO MEET ALIGNMENT. USE 13'-0" LENGTHS OF ACP.
3. CONTRACTOR SHALL COORDINATE PROJECT PIPELINE CONSTRUCTION WITH GRADING AND NURSERY OPERATIONS AS NOTED IN THE SPECIFICATIONS SECTIONS 6-3, PART 1 SPECIAL PROVISIONS
4. GRADING ELEVATION ON PLAN & PROFILE FROM STA. 17+50 TO STA. 21+00 BY PRICE & ASSOC. 10/5/78. FOR NAKASE BROS. WHOLESALE NURSERIES.

REV	DATE	DESCRIPTION	APP
2	11/7/79	ADDENDUM NO.2 REV.	R.P.K.
1	10/24/79	ADDENDUM NO.1 REV.	R.P.K.

LOS ALISOS WATER DISTRICT
ORANGE COUNTY, CALIFORNIA

WEST TRANSMISSION MAINS
WEST RESERVOIR T. M. LATERAL
WEST RECLAIMED WATER T. M.
PLAN & PROFILE

Boyle Engineering Corporation
consulting engineers / architects

DESIGN H.W. | DRAWN J.C. | CHECKED R.P.K. | DATE AUG. 1979 | F.B. X-43 | B-L04-125-06 | D-2053

SHEET NO. 11 OF 23 SHEETS

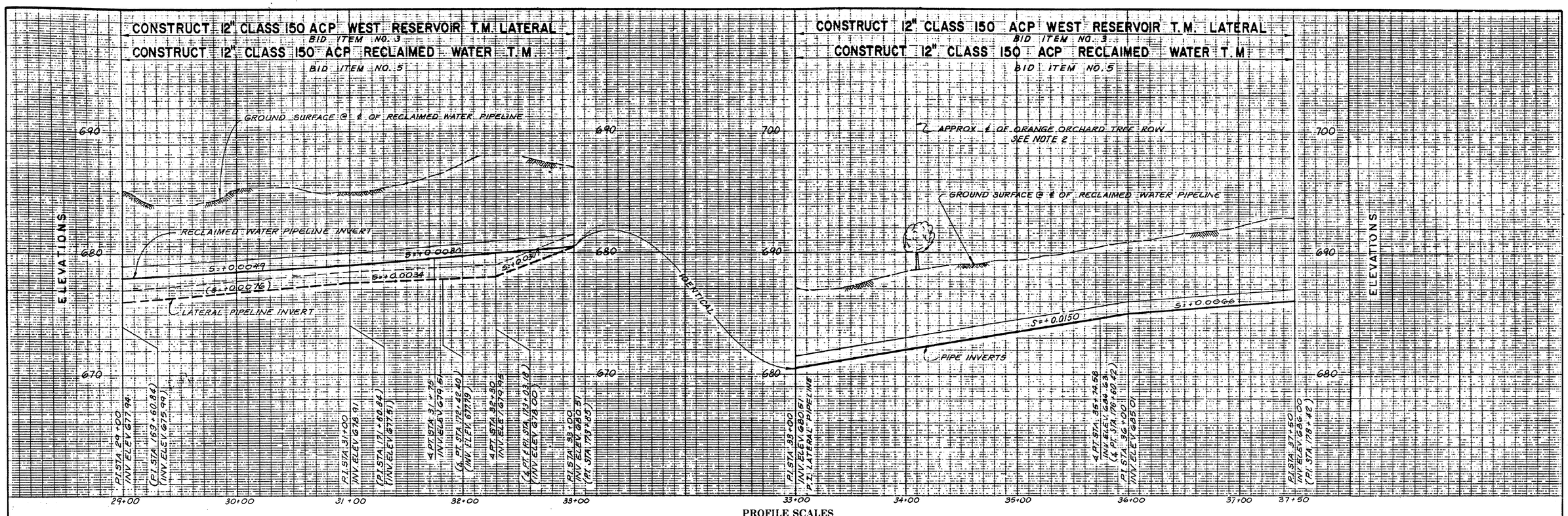

PROFILE SCALES

HORIZONTAL 1" = 40'
VERTICAL 1" = 4'

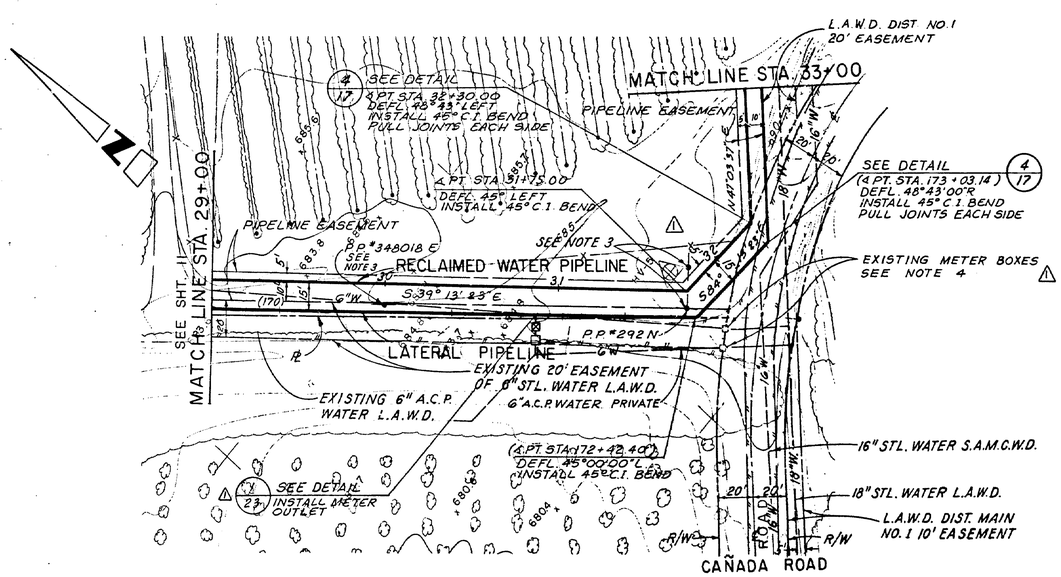

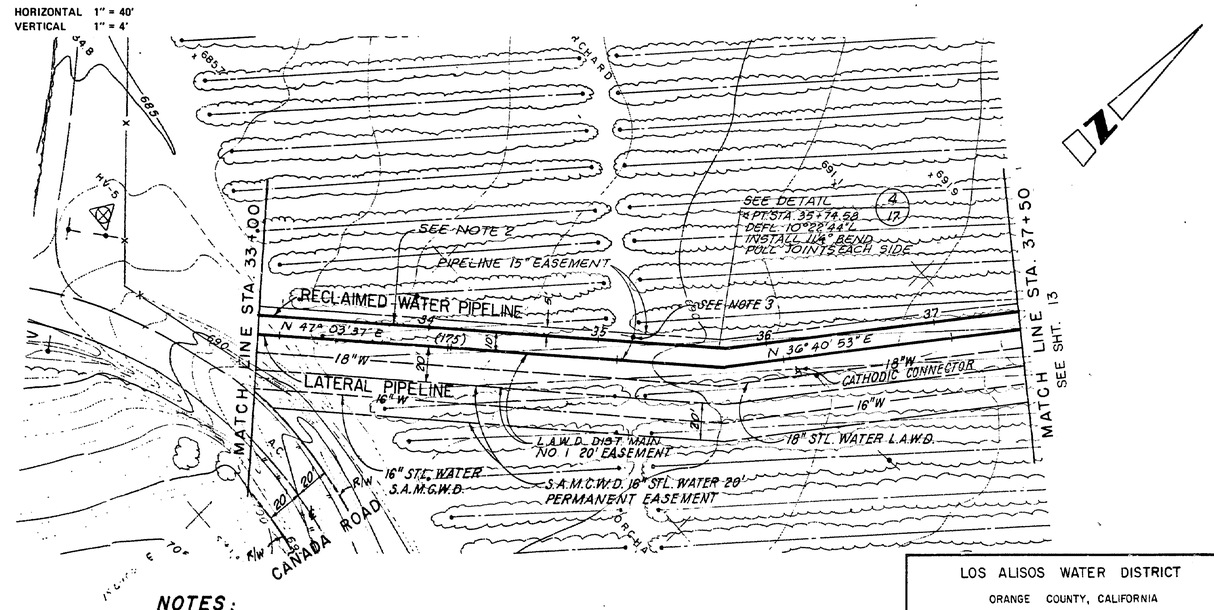

PLAN SCALE: 1" = 40'

NOTES:

1. WEST RESERVOIR TRANSMISSION MAIN LATERAL PIPELINE STATIONING IN PARENTHESIS THIS PAGE
2. CONTRACTOR SHALL BE REWARDED TO PROTECT ORANGE TREES WITHIN 5 FEET EACH SIDE OF TRENCH. SEE SPECIFICATIONS SECTION 7-5, PART 1, SPECIAL PROVISIONS
3. CONTRACTOR SHALL CONTACT SCE. AREA PLANNER FOR PROTECTION OF POWER POLE PER SECTION 7-6, PART 1, SPECIAL PROVISIONS.
4. SALVAGE TWO EXIST. 6" IRRIGATION WATER METERS TO L.A.W.D. AFTER WEST RESERVOIR T.M. LATERAL 15 COMPLETE. COORDINATE AND GIVE 48 HR. NOTICE TO L.A.W.D.

REV	DATE	DESCRIPTION	APP
2	12/20/79	REVISION CATHODIC CONNECTOR	D.M.
1	10/24/79	ADDENDUM NO. 1 REVISION	RPK

LOS ALISOS WATER DISTRICT
ORANGE COUNTY, CALIFORNIA

WEST TRANSMISSION MAINS
WEST RESERVOIR T.M. LATERAL
WEST RECLAIMED WATER T.M.
PLAN & PROFILE

DESIGN H.W. | DRAWN J.C. | CHECKED R.P.K. | DATE AUG. 1979 | F.B. X-43 | B-L04-125-06 | D-2053

Boyle Engineering Corporation
consulting engineers / architects

SHEET NO. 12 OF 23 SHEETS

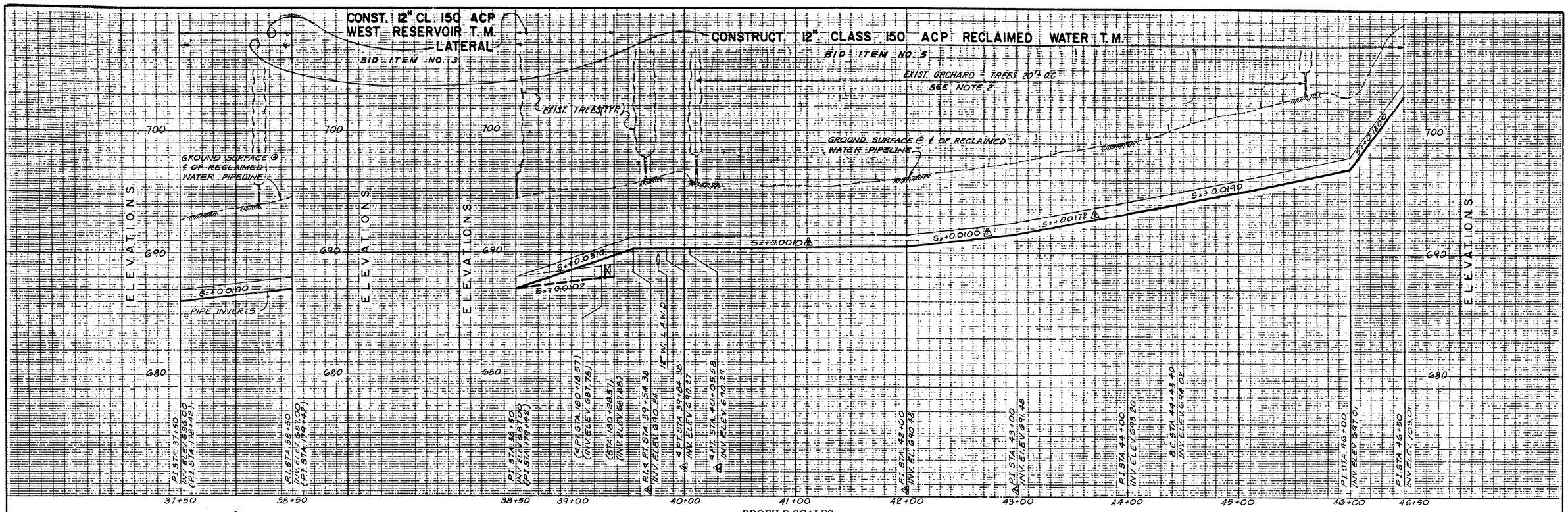

PROFILE SCALES

HORIZONTAL 1" = 40'
VERTICAL 1" = 4'

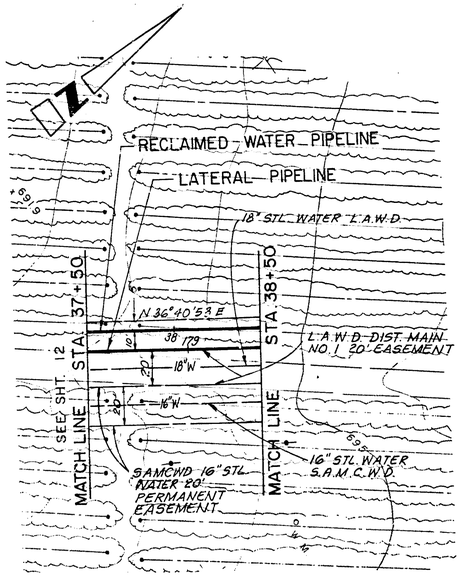

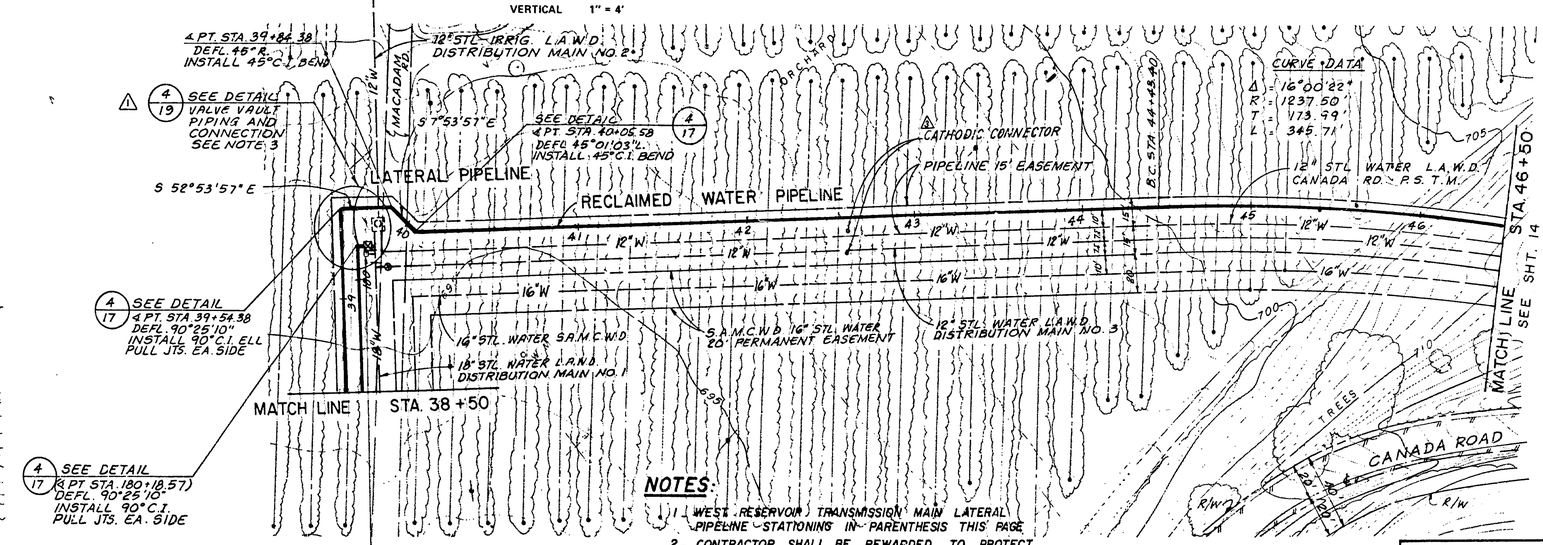

NOTES:

1. WEST RESERVOIR TRANSMISSION MAIN LATERAL PIPELINE STATIONING IN PARENTHESIS THIS PAGE
2. CONTRACTOR SHALL BE REWARDED TO PROTECT ORANGE TREES WITHIN 4 FEET EACH SIDE OF TRENCH. SEE SPECIFICATIONS SECTION 7-5, PART I, SPECIAL PROVISIONS.
3. CONTRACTOR SHALL POTHOLE AND VERIFY EXISTING 18" PIPELINE LOCATION AND INVERT BEFORE CONSTRUCTION FOR CONNECTION. PER SECTION 3, PART II, SPECIAL PROVISIONS.

PLAN SCALE: 1" = 40'

REV	DATE	DESCRIPTION	APP
3	12/20/79	REVISION CATHODIC CONNECTORS	D.M.
2	8/16/79	REVISED FOR LAKE FOREST PROP.	RPK
1	10/24/75	ADDENDUM NO. 1 REVISION	RPK

DESIGN H.W.
DRAWN J.C.
CHECKED R.P.K.
DATE AUG. 1979
F.B. X-43
B-L04-125-06
D-2053
Boyle Engineering Corporation
consulting engineers / architects
SHEET NO. 13 of 23 SHEETS

LOS ALISOS WATER DISTRICT
ORANGE COUNTY, CALIFORNIA

WEST TRANSMISSION MAINS
WEST RESERVOIR T.M. LATERAL
WEST RECLAIMED WATER T.M.
PLAN & PROFILE

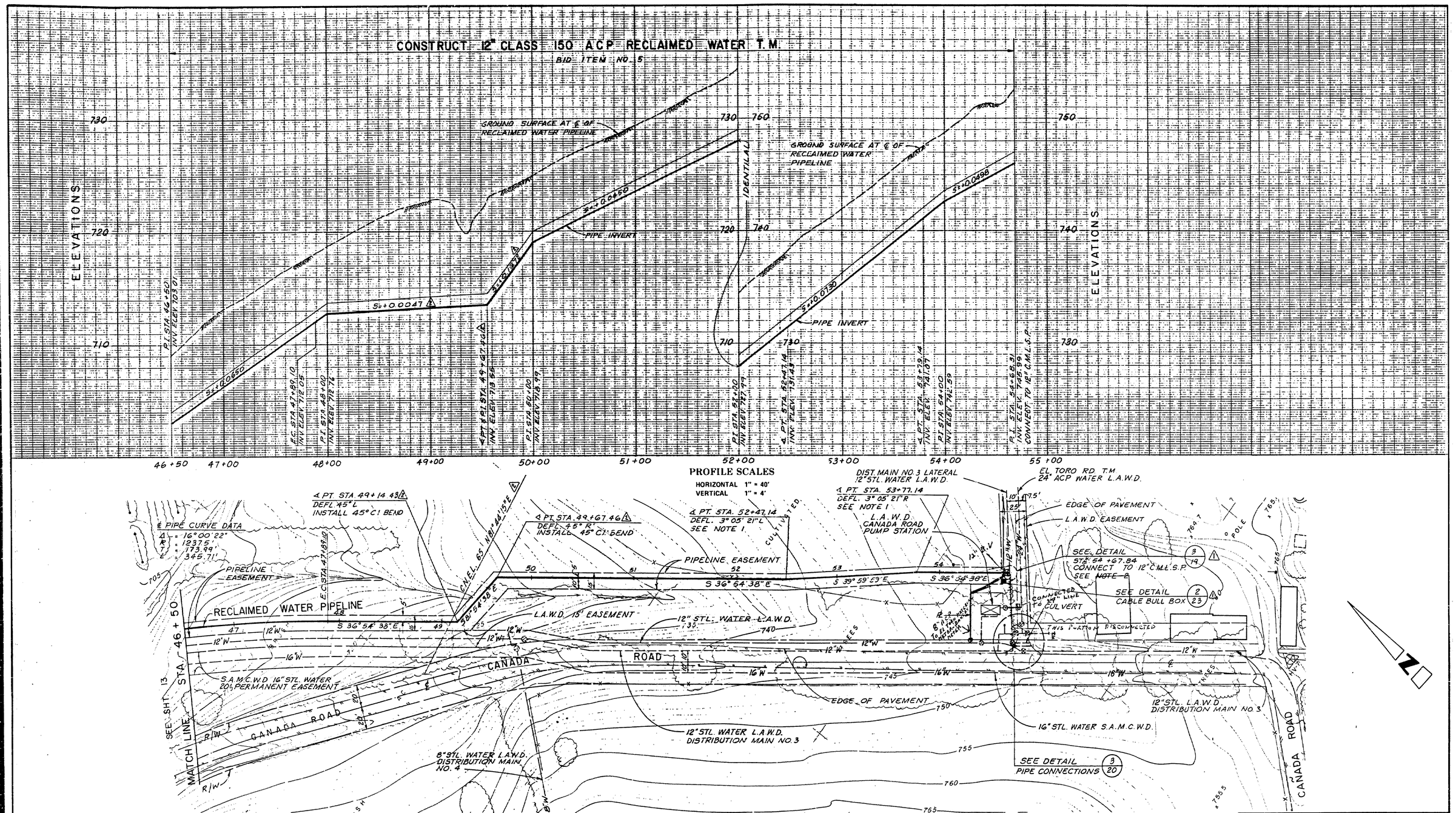

NOTES:

1) PULL A.C.P JOINTS EQUALLY EACH SIDE TO MEET ALIGNMENT USE 13'-0" LENGTHS A.C.P.

2) CONTRACTOR SHALL POT HOLE AND VERIFY EXISTING 12" PIPELINE LOCATION AND INVERT BEFORE CONSTRUCTION FOR CONNECTION.

PLAN SCALE: 1" = 40'

LOS ALISOS WATER DISTRICT

ORANGE COUNTY, CALIFORNIA

WEST TRANSMISSION MAINS

WEST RECLAIMED WATER T.M.

PLAN & PROFILE

REV	DATE	DESCRIPTION	APP
2	11/16/79	REVISED FOR LAKE FOREST PROP.	R.P.K
1	10/24/79	ADDENDUM NO. 1 REVISION	R.P.K

DESIGN M.D. | DRAWN J.C. | CHECKED R.P.K. | DATE AUG. 1979 | F.B. X-43

Boyle Engineering Corporation
consulting engineers / architects

B-L04-125-06 | D-2053

SHEET NO. 14 of 23 SHEETS

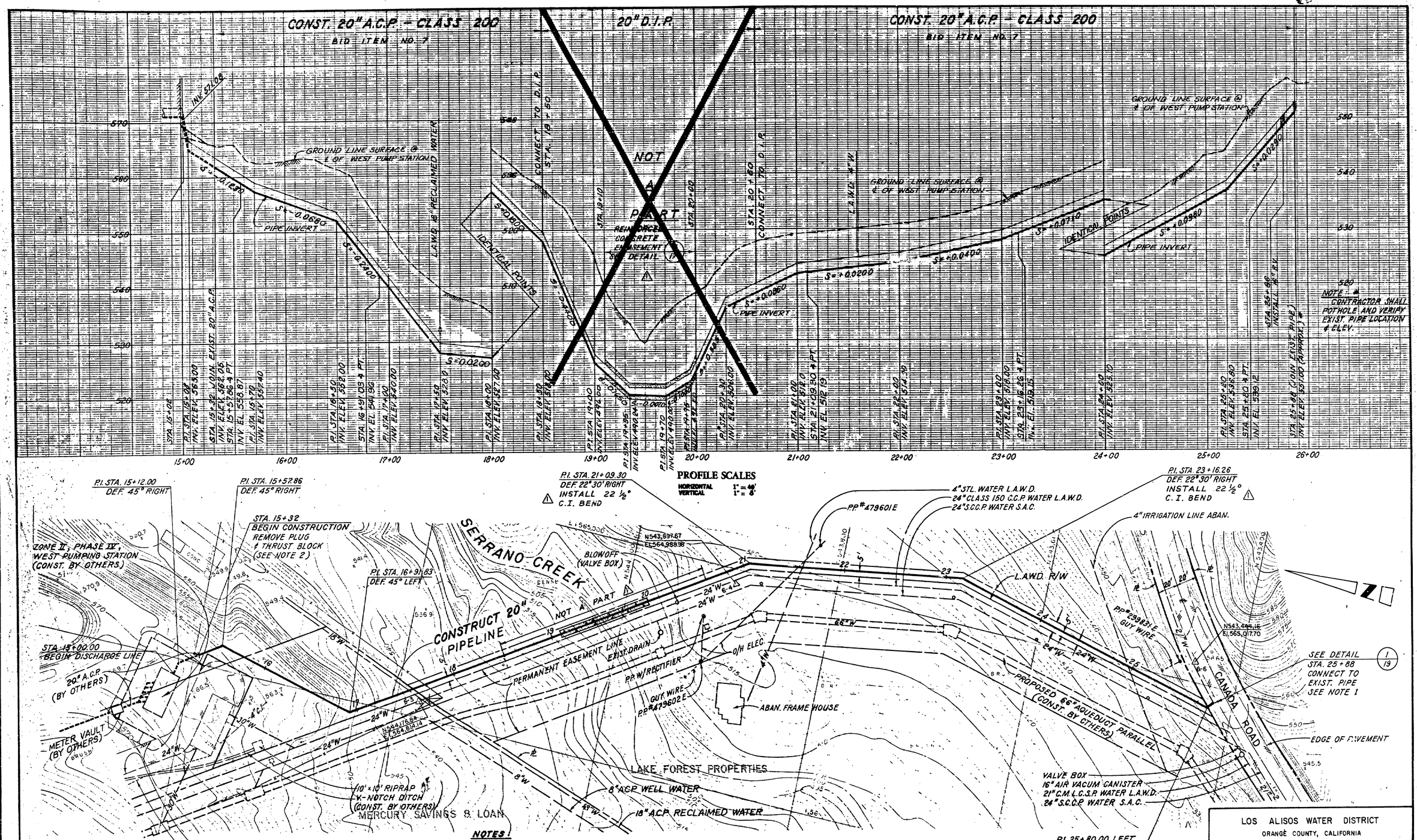

NOTES:

1. CONTRACTOR SHALL POTHOLE AND VERIFY LOCATION OF EXIST. PIPE. LOCATION & INV. ELEV.
2. CONTRACTOR IS TO COORDINATE OTHER CONSTRUCTION IN AREA WITH OTHER CONTRACTORS AS NOTED IN THE SPEC'S. SECTION 6-3, PART 1, SPECIAL PROVISIONS.

REV.	DATE	DESCRIPTION	APP.
1	10/24/79	ADDENDUM NO. 1 REVISION	RPK

LOS ALISOS WATER DISTRICT
ORANGE COUNTY, CALIFORNIA

WEST TRANSMISSION MAINS
WEST PUMP STATION
20" DISCHARGE LINE
PLAN & PROFILE

DESIGN G.B. | DRAWN J.C. | CHECKED R.P.K. | DATE AUG. 1979 | JOB X-43 | 8-L04-125-06 | D-2053

Boyle Engineering Corporation
consulting engineers | architects

SHEET NO. 15 OF 23 SHEETS

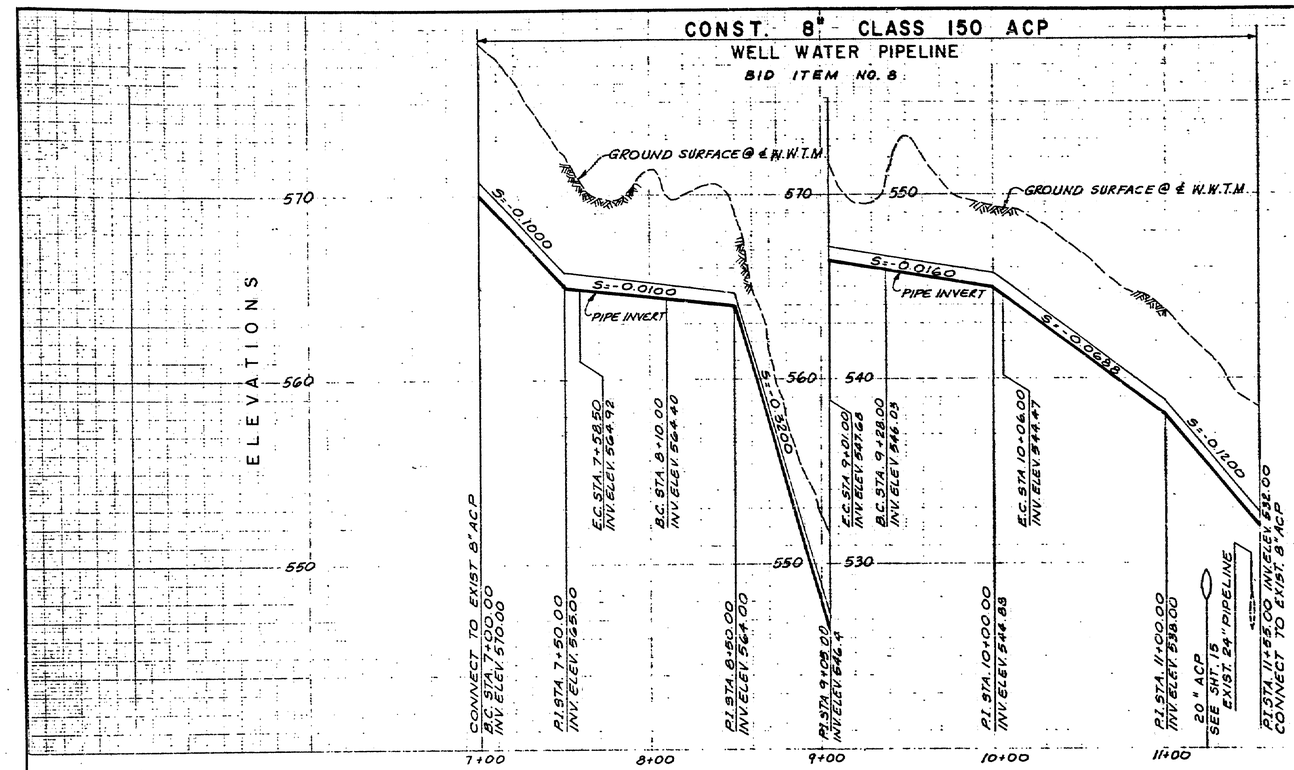

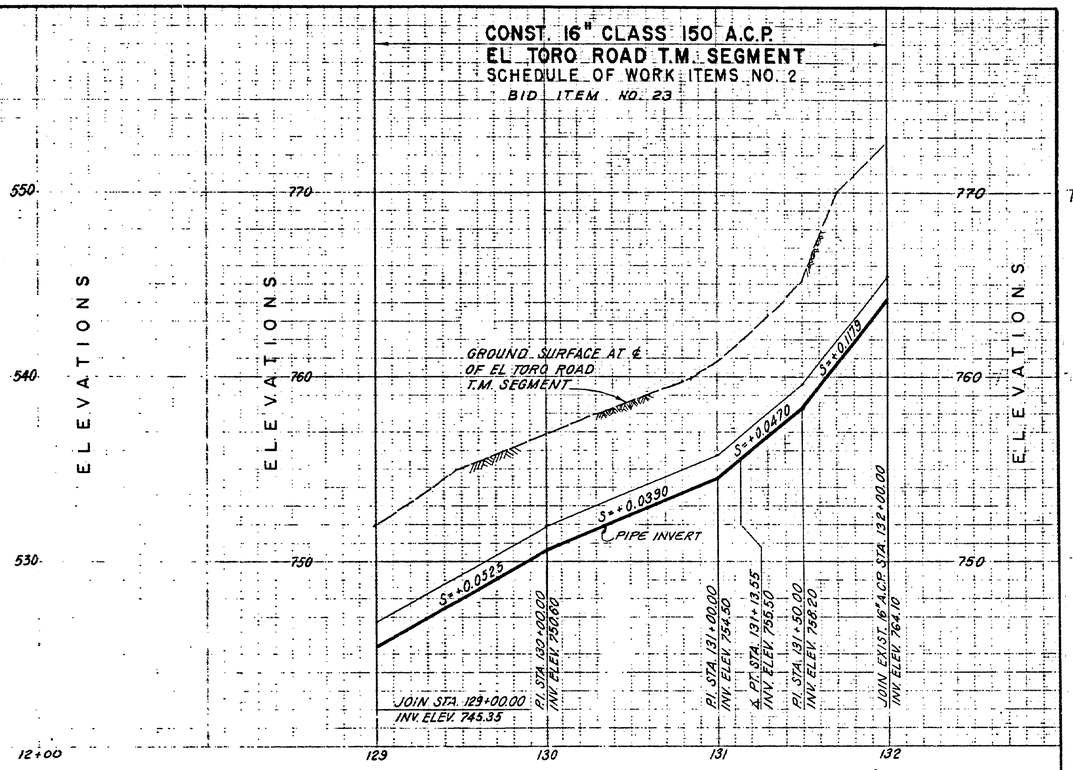

PROFILE SCALES

HORIZONTAL 1" = 40
VERTICAL 1" = 4'

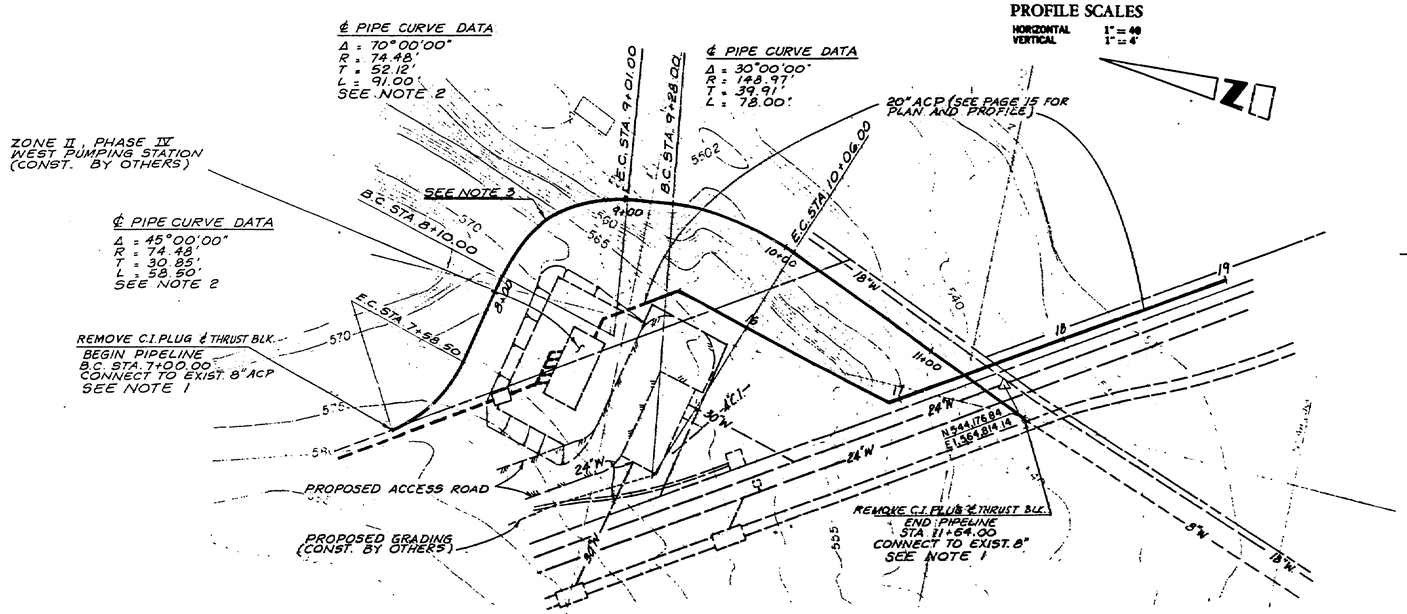

WELL WATER T.M.

PLAN ⚠

SCHEDULE OF WORK ITEMS NO. 1

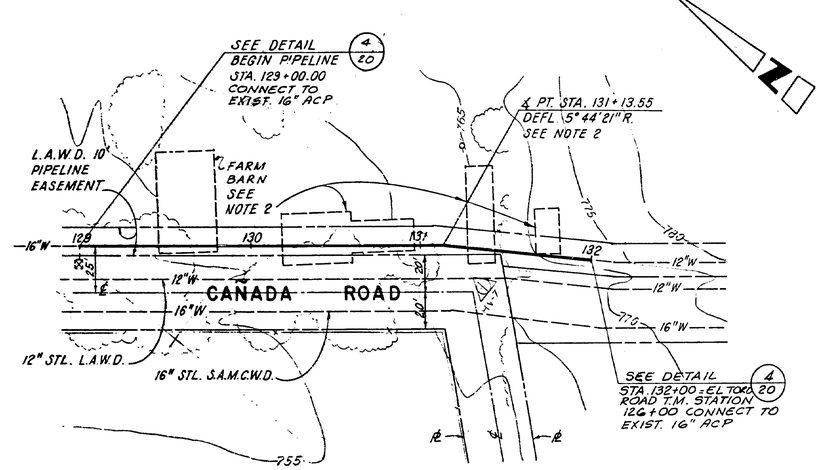

EL TORO ROAD T.M. 300' SEGMENT

PLAN ⚠

SCHEDULE OF WORK ITEMS NO. 2

NOTES:

1. CONTRACTOR SHALL POT HOLE AND VERIFY EXIST. 8" PIPELINE LOCATION AND INVERT BEFORE CONST. AS NOTED IN THE SPECIFICATIONS SECTION G-3 PART 1 OF SPECIAL CONDITIONS.
2. USE 6½ LENGHT A.C.P. BELLED AT JOB SITE
3. TEST PRESSURE AT 100 PSI

PLAN SCALE: 1" = 40'

NOTE:

1. PULL ACP JOINTS EQUALLY EACH SIDE TO MEET ALIGNMENT USE 13'-0" LENGHTS ACP.
2. WOODEN FRAME FARM BARNS WILL BE REMOVED BY OTHERS BEFORE SCHEDULE NO. 2 IS AWARDED.

REV	DATE	DESCRIPTION	APP
⚠	10/24/79	ADDENDUM NO. 1 REVISIONS	RPK

LOS ALISOS WATER DISTRICT
ORANGE COUNTY, CALIFORNIA

WELL WATER TRANSMISSION MAIN
EL TORO ROAD T.M. SEGMENT
PLAN & PROFILE

DESIGN D.M. | DRAWN J.C. | CHECKED R.P.K. | DATE AUG. 1979 | SCALE X-43 | B-L04-125-06 | D-2053

Boyle Engineering Corporation
consulting engineers / architects

SHEET NO. 16 OF 23 SHEETS

TABLE IS BASED UPON 2000 PSF ALLOWABLE SOIL BEARING																					
THRUST BLOCK DIMENSIONS																					
PIPE SIZE	0° TO 11¼°				11¼° TO 22½°				22½° TO 45°				45° TO 90°				DEAD ENDS & TEES			PIPE SIZE
CLASS 150	HORIZ. $L_1 \times L_2$	VERT. C.Y. A.C.P.	VERT. C.Y. C.C.P.	VERT. REBAR	HORIZ. $L_1 \times L_2$	VERT. C.Y. A.C.P.	VERT. C.Y. C.C.P.	VERT. REBAR	HORIZ. $L_1 \times L_2$	VERT. C.Y. A.C.P.	VERT. C.Y. C.C.P.	VERT. REBAR	HORIZ. $L_1 \times L_2$	VERT. C.Y. A.C.P.	VERT. C.Y. C.C.P.	VERT. REBAR	HORIZ. $L_1 \times L_2$	VERT. C.Y. A.C.P.	VERT. C.Y. C.C.P.	CLASS 150
12	1.5 × 2	1.5	—	#6	2' × 3'	3.0	—	#6	3' × 4'	5.9	—	#6	4.5 × 5	10.8	—	#8	4 × 4	7.6	—	12"
18	2 × 3	3.1	—	#6	3' × 4	6.1	—	#6	5' × 5'	11.9	—	#10	8' × 5.5'	22.0	—	#11	6' × 5.5	15.6	—	18"
20	2.5 × 3	3.8	—	#6	4' × 4'	7.5	—	#8	5' × 6'	14.7	—	#10	9' × 6'	27.2	—	#14	6.5 × 6	19.2	—	20"
CLASS 200																				CLASS 200
18	2.5 × 3	3.8	—	#6	4 × 4	7.5	—	#8	5 × 6	14.7	—	#10	3' × 6'	27.2	—	#14	6.5 × 6'	19.2	—	18"

NOTE: CAST IRON FITTINGS:

CAST IRON FITTINGS SHALL BE CONSTRUCTED IN ACCORDANCE WITH THE SPECIFICATION. THE GASKET SEAT IN THE BELL SHALL BE MACHINE MADE RATHER THAN CAST. THE MANUFACTURER SHALL FURNISH THE DISTRICT WITH CERTIFICATIONS PRIOR TO INSTALLATION THAT THE TOLERANCES OF THE GROOVE SHALL MEET THE TOLERANCES OF THE PIPE.

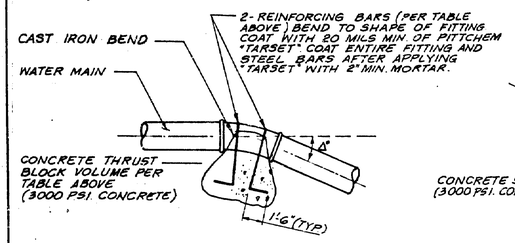

PROFILE

TYPICAL VERTICAL THRUST BLOCK

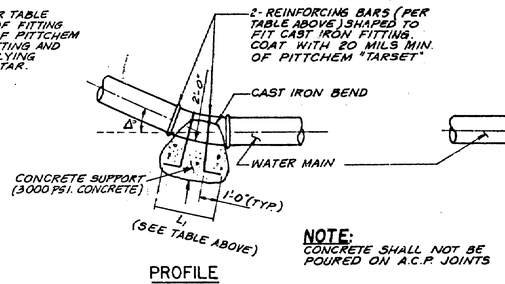

PROFILE

TYPICAL VERTICAL SUPPORT

NOTE: CONCRETE SHALL NOT BE POURED ON A.C.P. JOINTS

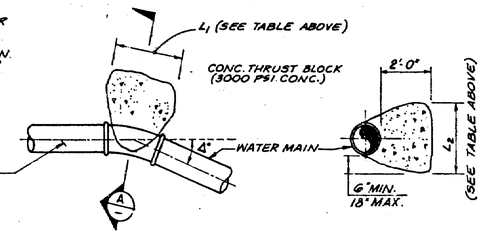

PLAN

SECTION A

TYPICAL HORIZONTAL THRUST BLOCK

TYPICAL THRUST BLOCKS

DETAIL 1
N.T.S.

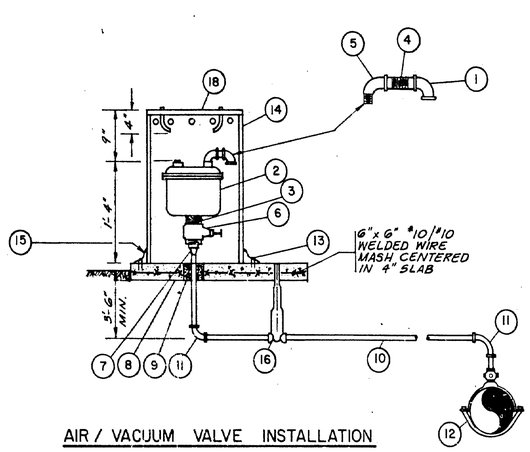

AIR / VACUUM VALVE INSTALLATION

DETAIL 2
N.T.S.

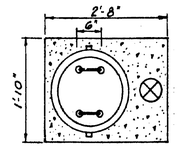

PLAN

MATERIAL LIST	
NO.	DESCRIPTIONS
1	90° ELL. (SCREEN)
2	2" COMB. AIR & VACUUM RELEASE VALVE APCO 145C OR APPRV'D. EQ.
3	SHORTNIPPLE
4	2½" LONG NIPPLE
5	90° STREET ELL.
6	MUELLER NO. H-10914 OR CRANE NO. 428 OR APPRV'D. EQ. GATE VA. W/BRONZE HAND WHEEL
7	MUELLER NO. H-15425 OR JONES NO. J-1531 OR APPRV'D. EQ. COPPER TO IRON PIPE FITTING.
8	36" x 30" CONCRETE BASE
9	4" ϕ HOLE PACKED PEA GRAVEL
10	TYPE "K" COPPER
11	LONG TURN BEND
12	SERVICE CLAMP SMITH-BLAIR OR APPRV'D. EQ.
13	EMBED EYE BOLT (2 EA.)
14	16" x 8 GA. STEEL PIPE DOUBLE DIPPED AND GALVANIZED
15	HASP
16	MUELLER H-10314
17	MUELLER NO. H-15204
18	18" ϕ 8 GA. STL. ℞ DOUBLE DIPPED GALV.

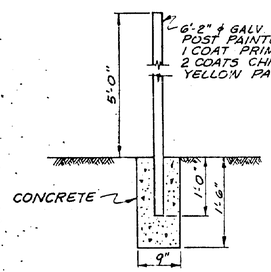

℄ PT. MARKER

DETAIL 3
N.T.S.

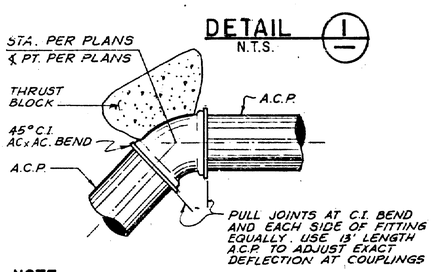

NOTE: DIRECTION OF BEND IS FOR REPRESENTATION ONLY

DETAIL 4
N.T.S.

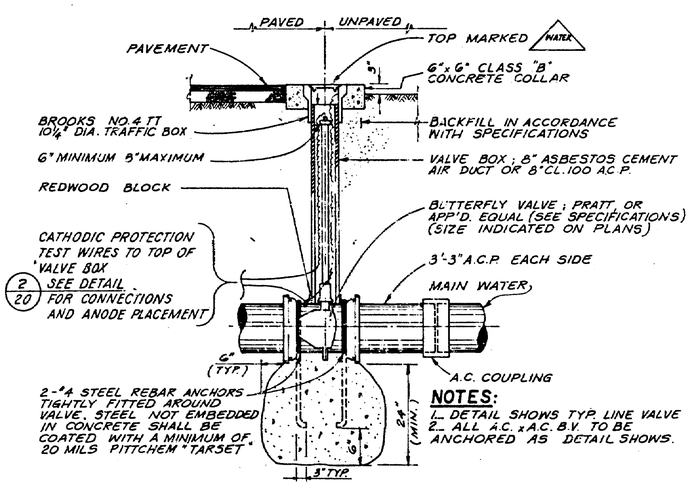

NOTES:
1. DETAIL SHOWS TYP. LINE VALVE
2. ALL A.C. x A.C. B.V. TO BE ANCHORED AS DETAIL SHOWS.

VALVE BOX AND SUPPORT

DETAIL 5
N.T.S.

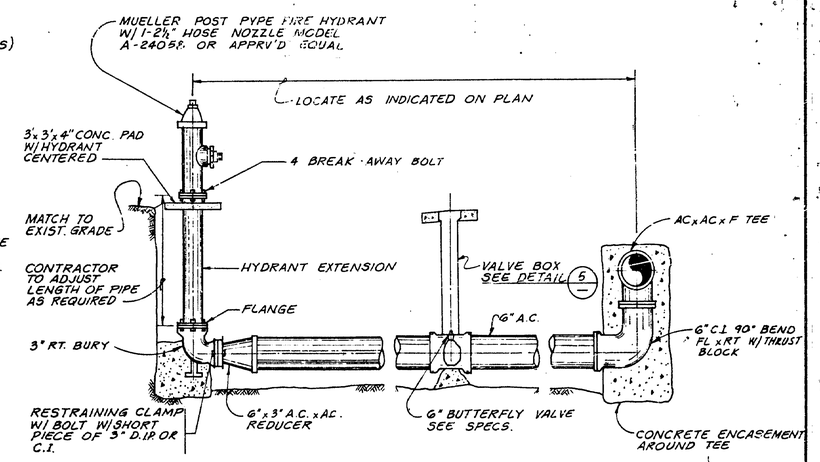

STANDARD BLOWOFF VALVE

DETAIL 6
N.T.S.

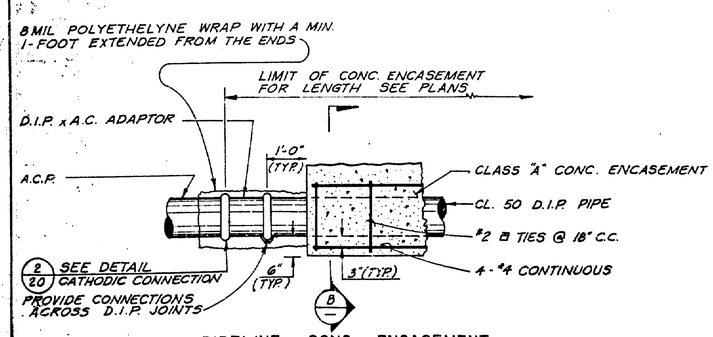

PIPELINE CONC. ENCASEMENT

DETAIL 7
N.T.S.

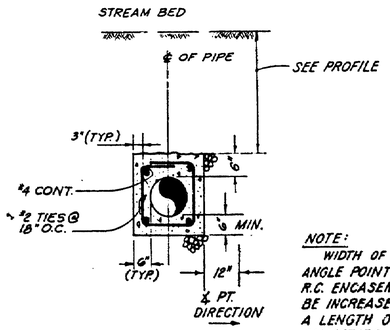

NOTE: WIDTH OF CONCRETE AT ANGLE POINTS WITHIN THE R.C. ENCASEMENT SHALL BE INCREASED 12" FOR A LENGTH OF 4 PIPE DIAMETERS EACH SIDE OF ANGLE POINT.

SECTION 8
N.T.S.

GENERAL NOTE:

1. ALL BURIED FERROUS FITTINGS AND VALVES SHALL BE WRAPPED WITH 8 MIL. POLYETHELYNE WRAP A MINIMUM 1-FOOT TO BE EXTENDED FROM THE ENDS OF THE FITTINGS;

LOS ALISOS WATER DISTRICT
ORANGE COUNTY, CALIFORNIA

WEST TRANSMISSION MAINS
DETAILS

REV	DATE	DESCRIPTION	APR

DESIGN R.P.K. | DRAWN J.C. | CHECKED V.E.O. | DATE AUG. 1979 | F.B. X-45 | B-L04-125-06 | D-2053

Boyle Engineering Corporation
consulting engineers / architects

SHEET NO. 17 OF 23 SHEETS

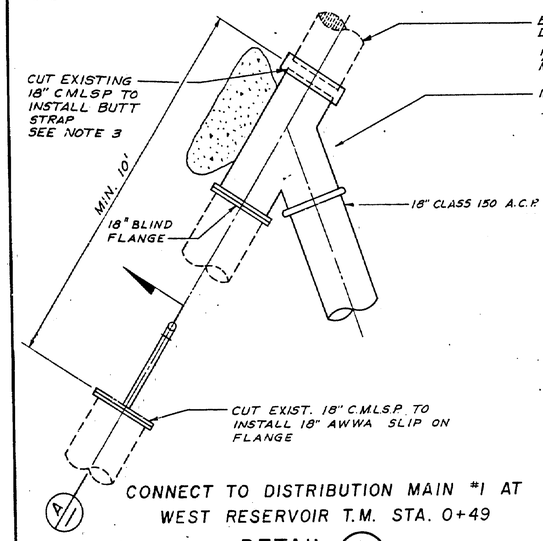

CONNECT TO DISTRIBUTION MAIN #1 AT WEST RESERVOIR T.M. STA. 0+49

DETAIL 1 / — N.T.S.

BID ITEM NO. 10

NOTE: SEE DETAIL 2/13 FOR CONNECTION OF DIST. MAIN NO. 1 TO NO. 5 EASTERLY OF SERRANO CREEK IN CANADA ROAD

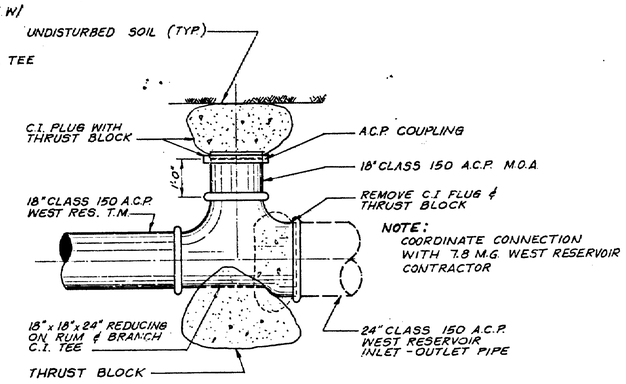

CONNECTION TO 7.8 M.G. WEST RESERVOIR AT WEST RESERVOIR T.M. STA. 65+95.01

DETAIL 2 / — N.T.S.

BID ITEM NO. 11

NOTE: EXACT LOCATION OF BLOWOFF HYDRANT PER L.A.W.D.

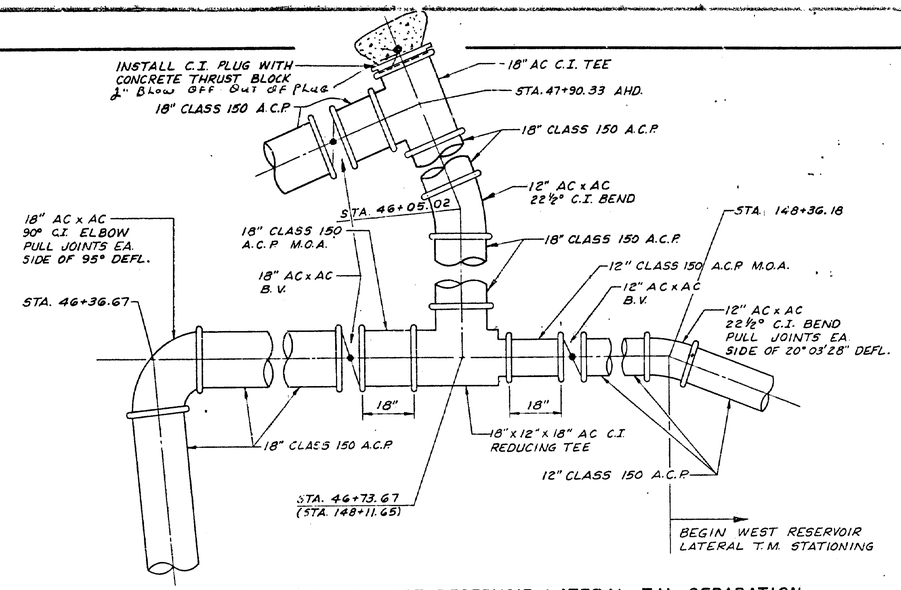

WEST RESERVOIR T.M. & WEST RESERVOIR LATERAL T.M. SEPARATION

DETAIL 3 / — N.T.S.

AS PART OF BID ITEM NO. 2

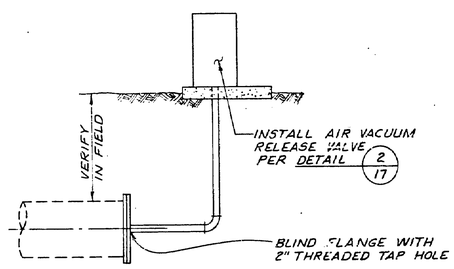

SECTION A/—

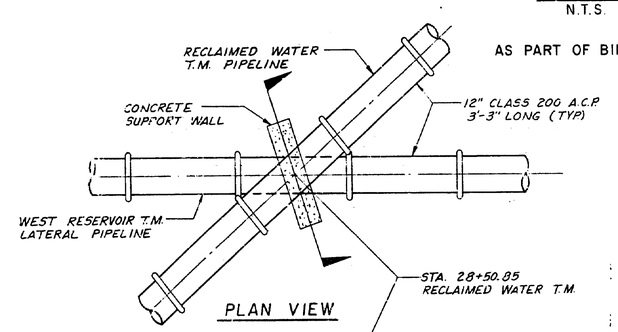

PLAN VIEW

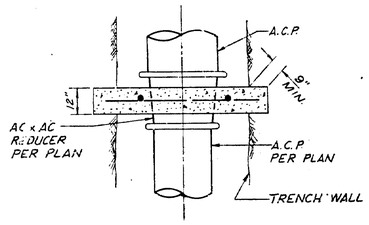

PLAN VIEW

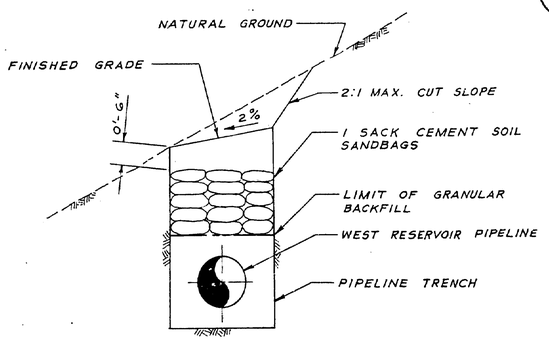

TRENCH SLOPE STABILIZERS

DETAIL 4 / — N.T.S.

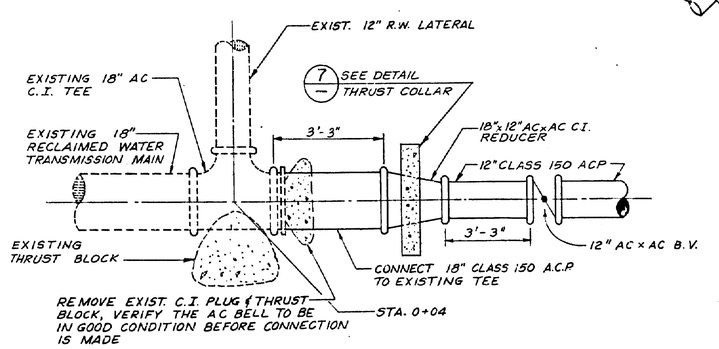

CONNECTION TO 18" RECLAIMED WATER T.M. AT WEST RECLAIMED WATER T.M. STA. 0+04.00

DETAIL 5 / — N.T.S. ⚠1

BID ITEM NO. 13

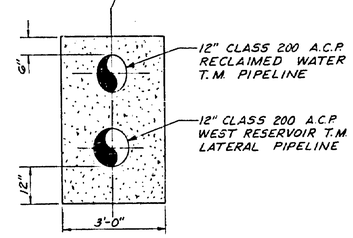

SECTION

PIPE CROSSING

DETAIL 6 / — N.T.S.

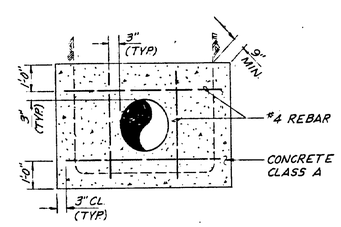

SECTION

REDUCER STABILITY COLLAR

DETAIL 7 / — N.T.S.

GENERAL NOTES:

1) ALL FERROUS FITTINGS SHALL BE WRAPPED WITH 8 MILLS POLYETHELINE. WRAP A MIN. OF 1 FOOT BEYOND THE ENDS OF THE FITTINGS.

2) L.A.W.D. IS TO BE NOTIFIED 48 HOURS IN ADVANCE OF ALL CONNECTIONS

3) CONTRACTOR SHALL SUBMIT SHOP DRAWINGS PER SECTION 7, SPECIAL CONDITIONS OF THE SPECIFICATIONS

4)

LOS ALISOS WATER DISTRICT
ORANGE COUNTY, CALIFORNIA

WEST TRANSMISSION MAINS
DETAILS

DEV.	DATE	DESCRIPTION	APP.
⚠1	10/24/79	ADDENDUM NO. 1 REVISIONS	R.P.K.

DESIGN R.P.K. DRAWN R.S. CHECKED V.E.O.

Boyle Engineering Corporation
consulting engineers / architects

DATE AUG. 1979 F.B. X-45 B-L04-125-06 D-2053

SHEET NO. 18 OF 23 SHEETS

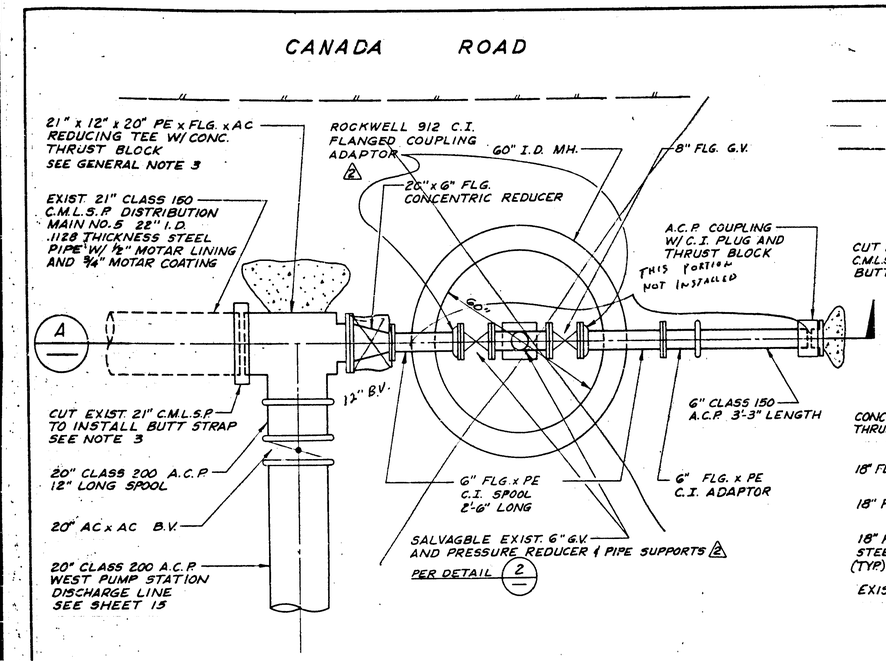

DETAIL 1 N.T.S. 1

BID ITEM NO. 15

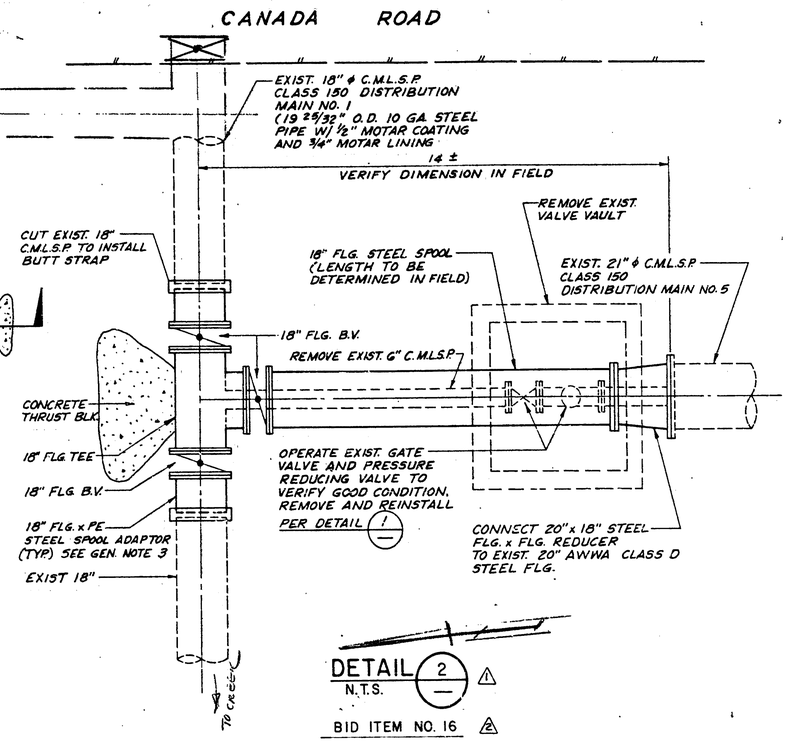

DETAIL 2 N.T.S. 1

BID ITEM NO. 16 2

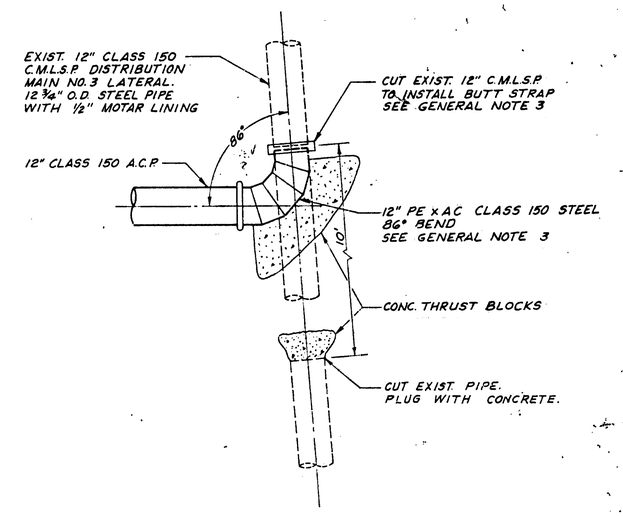

DETAIL 3 N.T.S. 1

BID ITEM NO. 14

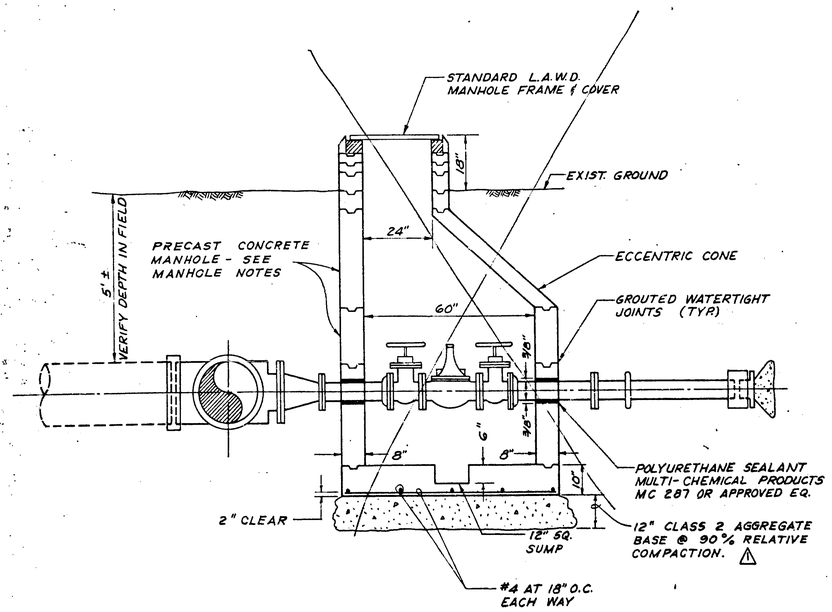

SECTION A N.T.S. 1

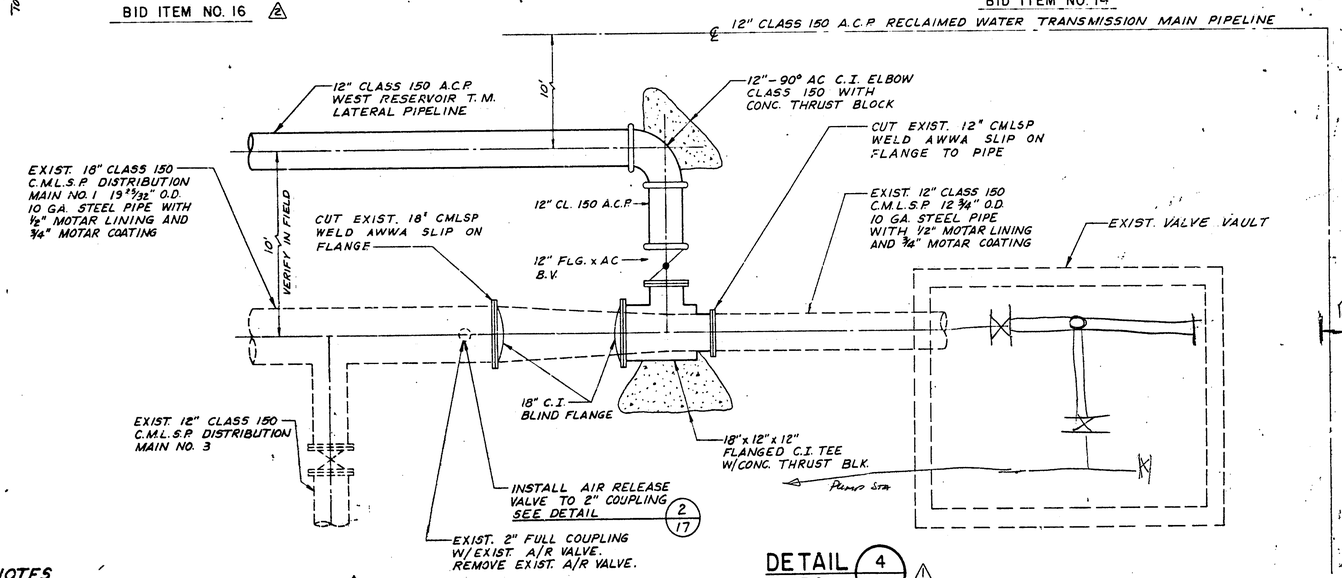

DETAIL 4 N.T.S. 1

BID ITEM NO. 12

MANHOLE NOTES

1) CONCRETE RINGS, CONES AND SECTIONS SHALL BE AS MANUFACTURED BY ASSOCIATED CONCRETE PRODUCTS OF APPROVED EQUAL.

2) 24" SIZE MANHOLE FRAME AND COVER SHALL BE AS MANUFACTURED BY E.B. MORITZ FOUNDRY, MODEL NO.'S M-1254 OR APPROVED EQUAL. 36" SIZE SHALL BE E.B. MORITZ FOUNDRY MODEL NO. M-3644 OR APPROVED EQUAL AND BOTH SIZES AS MODIFIED PER DETAILS THIS SHEET.

3) HOOPS OF #4 WIRE SHALL BE CAST INTO ALL SHAFT SECTIONS FOR SAFETY OF HANDLING.

GENERAL NOTES

1) ALL FERROUS FITTINGS SHALL BE WRAPPED WITH 8 MILS. POLYETHYLINE. WRAP A MIN. OF 1 FOOT BEYOND THE ENDS OF THE FITTINGS.

2) L.A.W.D. IS TO BE NOTIFIED 48 HOURS IN ADVANCE OF ALL CONNECTIONS.

3) CONTRACTOR SHALL SUBMIT SHOP DRAWINGS PER SECTION 7, SPECIAL CONDITIONS OF THE SPECIFICATIONS.

REV.	DATE	DESCRIPTION	APR
2	11/5/79	ADDENDUM NO. 2 REVISIONS	RPK
1	10/24/79	ADDENDUM NO. 1 REVISIONS	RPK

LOS ALISOS WATER DISTRICT
ORANGE COUNTY, CALIFORNIA

WEST TRANSMISSION MAINS
DETAILS

DESIGN R.P.K. DRAWN J.C. CHECKED V.E.O. DATE AUG. 1979 F.B. X-43

Boyle Engineering Corporation
consulting engineers / architects

8-L04-125-06 D-2053

SHEET NO. 19 OF 23 SHEETS

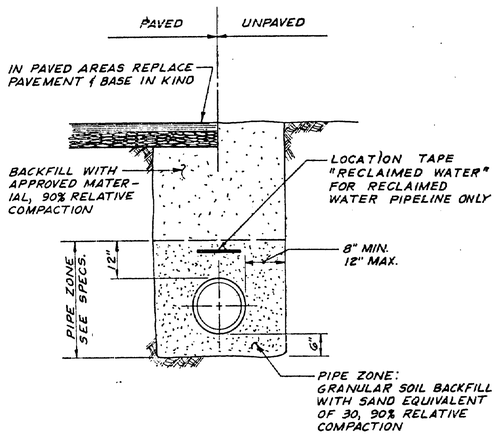

TYPICAL TRENCH SECTION

DETAIL 1
N.T.S.

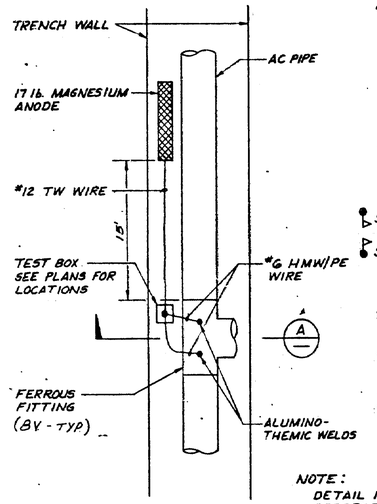

NOTE:
DETAIL IS REPRESENTATIONAL ONLY

DETAIL 2
N.T.S.

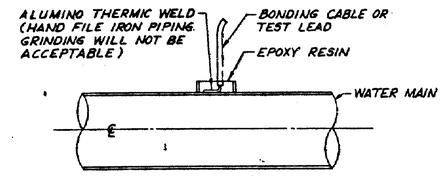

TYPICAL CATHODIC PROTECTION CABLE CONNECTION

DETAIL A
N.T.S.

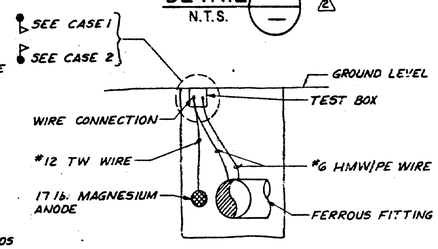

SECTION A
N.T.S.

NOT A PART

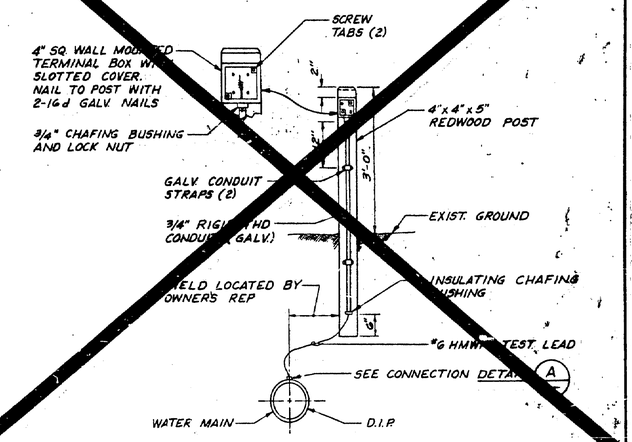

SEE DETAIL 5/17

TYPICAL INSTALLATION AT VALVES

CASE 1

TYPICAL INSTALLATION AT D.I.P. ENCASEMENT

CASE 2

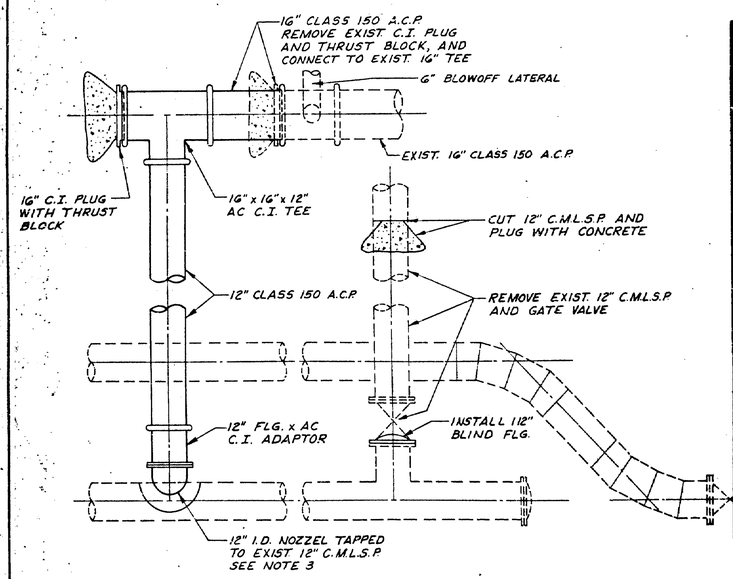

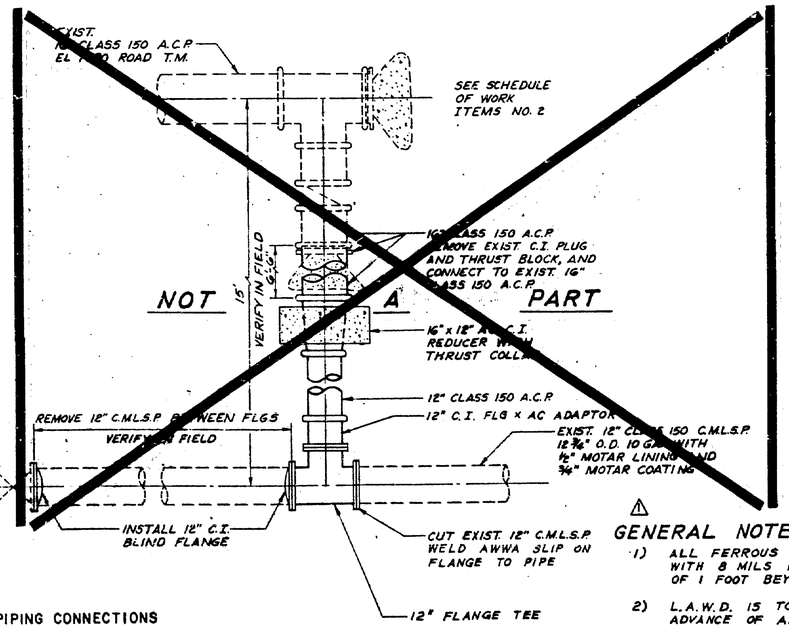

NOT A PART

CAÑADA ROAD PIPING CONNECTIONS

DETAIL 3
N.T.S.

BID ITEM NO. 16

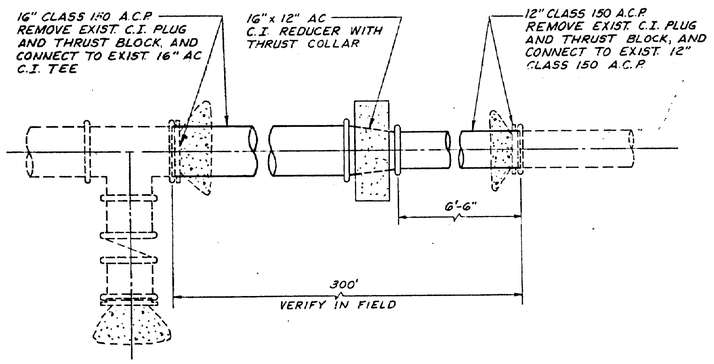

DETAIL 4
N.T.S.

SCHEDULE OF WORK ITEMS NO. 2
BID ITEM NO. 23

GENERAL NOTES:

1) ALL FERROUS FITTINGS SHALL BE WRAPPED WITH 8 MILS POLYETHYLINE. WRAP A MIN. OF 1 FOOT BEYOND THE ENDS OF THE FITTINGS.

2) L.A.W.D. IS TO BE NOTIFIED 48 HOURS IN ADVANCE OF ALL CONNECTIONS.

3) CONTRACTOR SHALL SUBMIT SHOP DRAWINGS PER SECTION 7, SPECIAL CONDITIONS OF THE SPECIFICATIONS.

REV	DATE	DESCRIPTION	APP
2	11/5/79	ADDENDUM NO. 2 REVISIONS	RPK
1	10/24/79	ADDENDUM NO. 1 REVISIONS	RPK

LOS ALISOS WATER DISTRICT
ORANGE COUNTY, CALIFORNIA

WEST TRANSMISSION MAINS
DETAILS

DESIGN R.P.K. | DRAWN R.S. | CHECKED V.E.O. | DATE AUG. 1979 | K.B. X-43 | B-L04-125-06 | D-2053

Boyle Engineering Corporation
consulting engineers / architects

SHEET NO. 20 OF 23 SHEETS

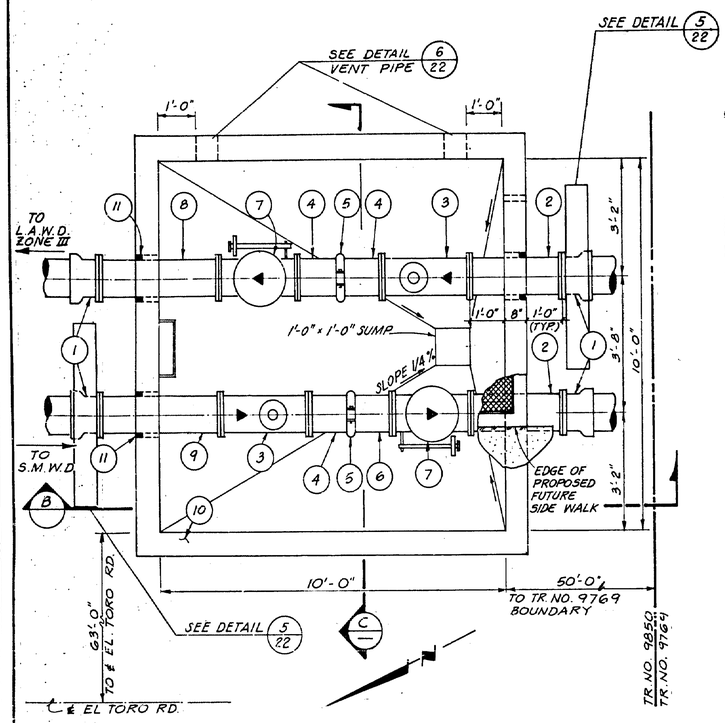

METER VAULT PLAN

DETAIL 1/— 1/2" = 1'-0"

PIPING MATERIAL SCHEDULE		
ITEM	SIZE	DESCRIPTION
1	12"	FLANGED X AC CAST IRON REDUCER
2	12"	2'-8" LONG FLANGED CAST IRON SPOOL.
3	12"	"MUESCO" FST-20 WATER METER WITH 125# STANDARD FLANGES, 250 PSI METER HEAD WORKING PRESSURE RATING AND PRT 1 TRANSMITTING HEAD.
4	12"	FLANGE x GROOVED END CAST IRON SPOOL 1'-6" LONG.
5	12"	VICTAULIC COUPLING STYLE 31 OR APPROVED EQUAL.
6	12"	FLANGE X GROOVED END CAST IRON SPOOL 1'-6" LONG.
7	12"	"APCO" SWING CHECK VALVE MODEL 6012 WITH WEIGHTED LEVER ONLY.
8	12"	4'-0" LONG FLANGED CAST IRON SPOOL.
9	12"	3'-6" LONG FLANGED CAST IRON SPOOL.
10	10' X 10'	PRECAST "QUICKSET" PANEL VAULT WITH 8'-0" INSIDE VAULT HEIGHT AND CENTERED OPENING FOR 3' X 10' CAST-IN-PLACE NECKING.
11	---	"LINK-SEAL" WALL PENETRATION SEAL SYSTEM.
12	3' X 10'	"BILCO" TYPE J-AL SINGLE LEAF ALUMINUM DOOR WITH 10' HINGE (SPECIAL SIZE) AND RECESSED PADLOCK.

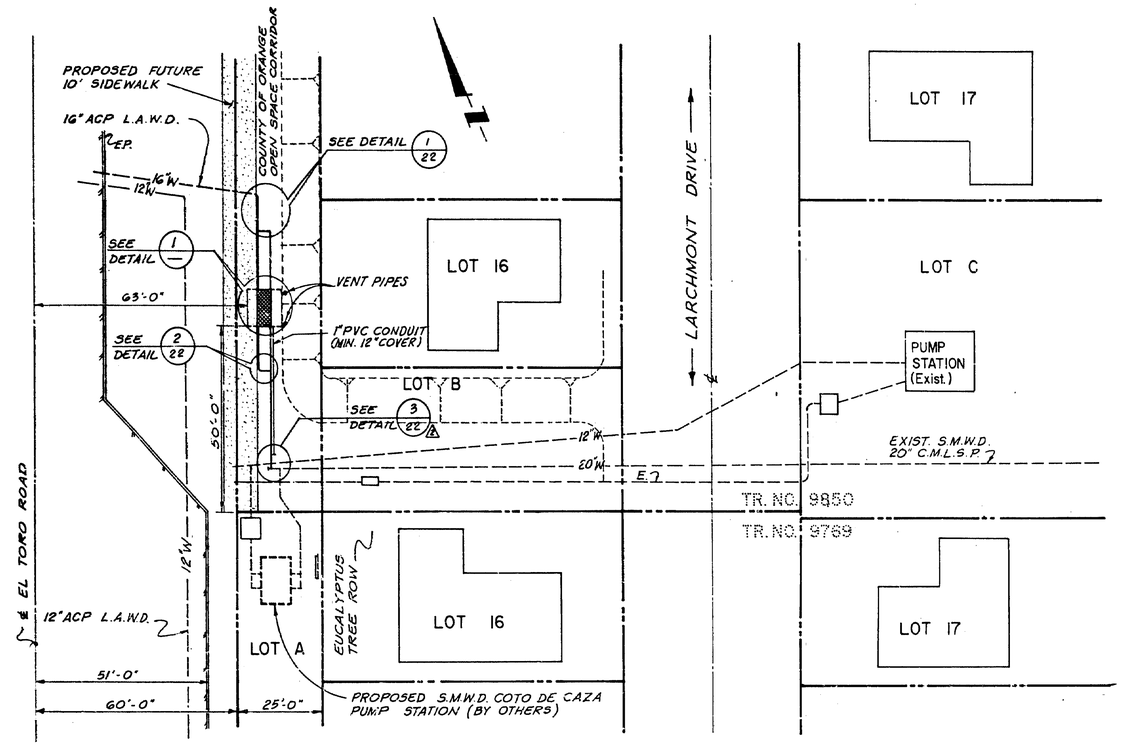

SITE PLAN
SCALE: 1" = 20'

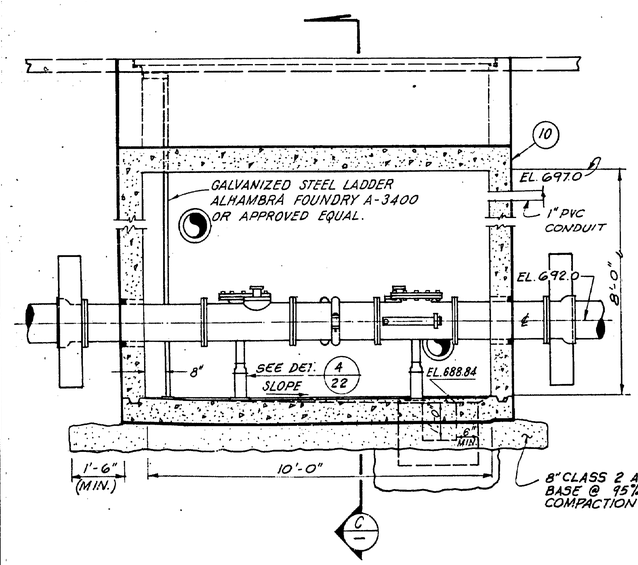

SECTION B/— 1/2" = 1'-0"

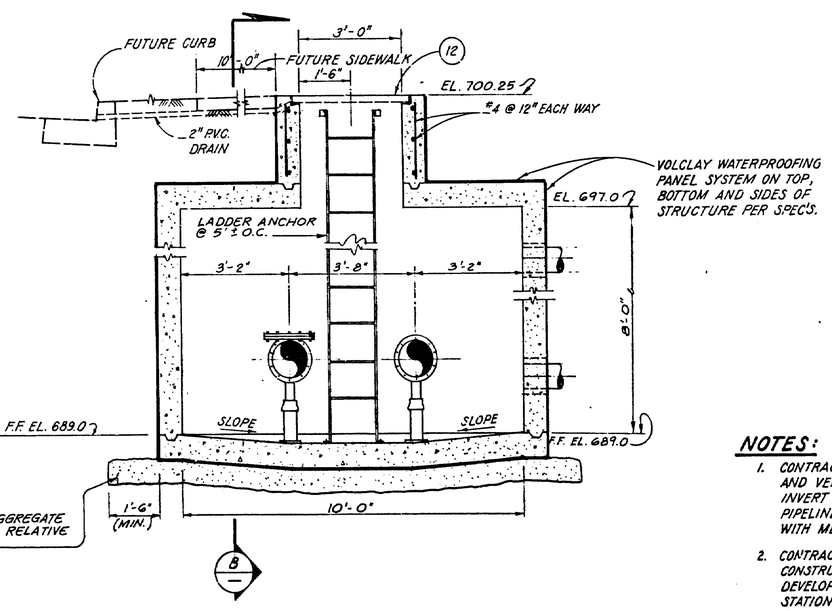

SECTION C/— 1/2" = 1'-0"

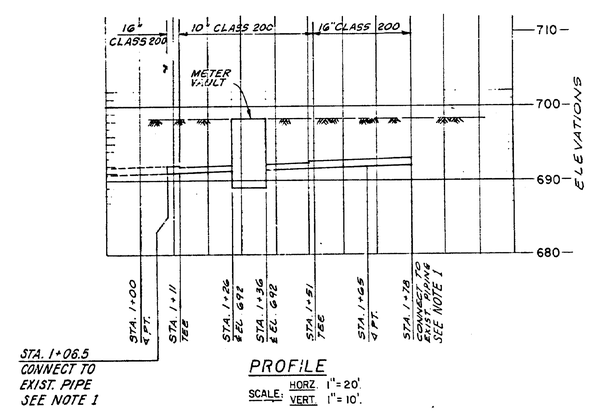

PROFILE
SCALE: HORZ. 1" = 20'
VERT. 1" = 10'.

NOTES:

1. CONTRACTOR SHALL POTHOLE AND VERIFY LOCATION AND INVERT ELEVATION OF EXIST. PIPELINES BEFORE PROCEEDING WITH METER VAULT CONSTRUCTION.
2. CONTRACTOR SHALL COORDINATE CONSTRUCTION WITH TR. NO. 9850 DEVELOPERS AND S.M.W.D. PUMP STATION CONTRACTOR. (EL TORO ROAD IMPROVEMENTS, 20" CONNECTION ETC.)
3. ALL CAST IRON FITTINGS AND VALVES SHALL BE WRAPPED IN POLYETHYLENE IN ACCORDANCE TO A.W.W.A. C105.

REV	DATE	DESCRIPTION	APP
2	11/8/79	S.M.W.D. REVISION	K.P.
1	10/22/79	ADDENDUM NO. 1 REVISION	R.P.K.

LOS ALISOS WATER DISTRICT
ORANGE COUNTY, CALIFORNIA

SANTA MARGARITA WATER DISTRICT
ZONE III METER INTERTIE

DESIGN R.P.K. | DRAWN S.V.H., J.C. | CHECKED V.E.O. | DATE AUG. 1979 | F.B. X-43 | B-L04-125-06 | D-2053

Boyle Engineering Corporation
consulting engineers / architects

SHEET NO. 21 OF 23 SHEETS

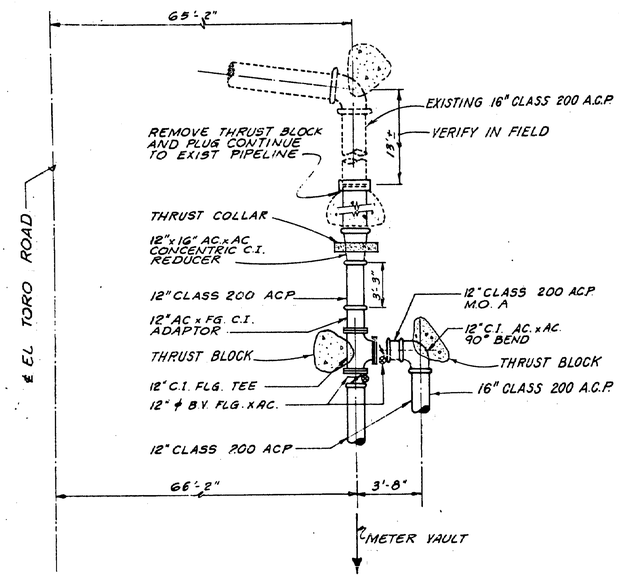

DETAIL 1
SC. = 1/4" = 1'.

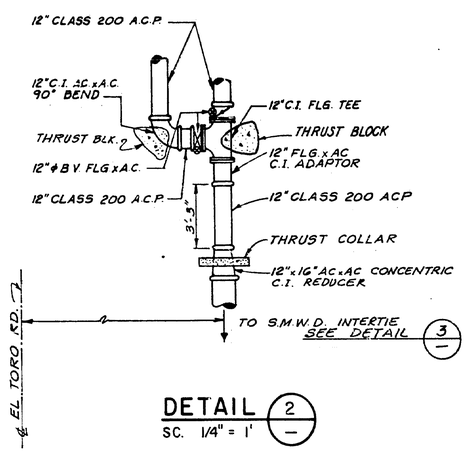

DETAIL 2
SC. 1/4" = 1'

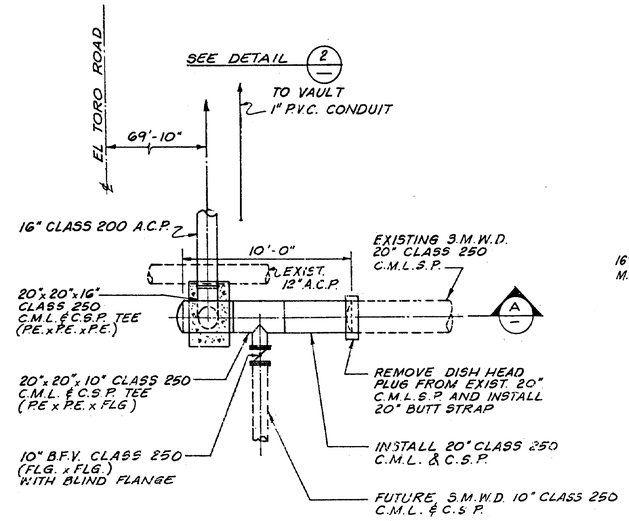

CONNECTION TO S.M.W.D. PLAN A

DETAIL 3
SC. 1/4" = 1'.

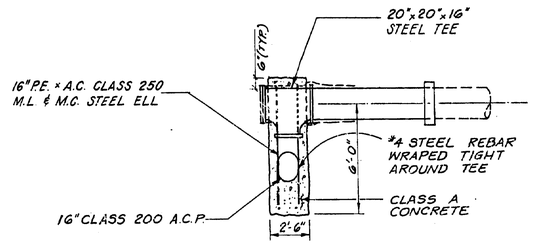

CONNECTION TO S.M.W.D.

SECTION A
SC. = 1/4" = 1'

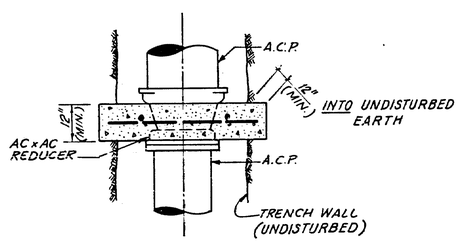

PLAN VIEW

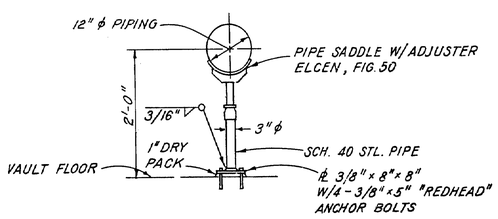

PIPE SUPPORT

DETAIL 4
N.T.S.

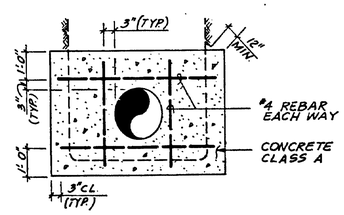

SECTION

REDUCER THRUST COLLAR

DETAIL 5
SC. 1/2" = 1'.

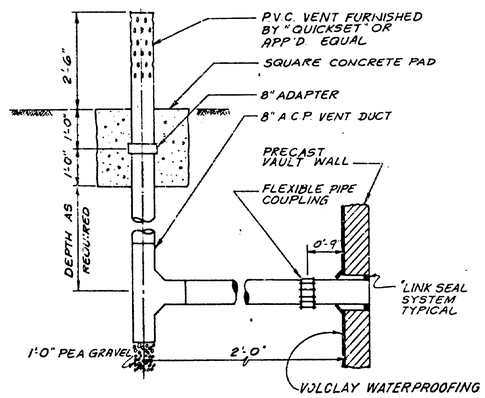

NOTE: TWO VENTS REQUIRED ONE ℄ LOCATED 1'-0" ABOVE FLOOR THE OTHER ℄ LOCATED 1'-0" BELOW TOP SLAB

VENT PIPE

DETAIL 6
SC 1/2" = 1'

LOS ALISOS WATER DISTRICT
ORANGE COUNTY, CALIFORNIA

SANTA MARGARITA WATER DISTRICT
ZONE III METER INTERTIE

REV.	DATE	DESCRIPTION	APP.
2	11/8/79	S.M.W.D REVISION	K.P.
1	10/22/79	ADDENDUM NO.1 REVISION	R.P.K.

DESIGN R.P.K. DRAWN S.K.H., J.C. CHECKED V.E.O. DATE OCT. 1979 F.B. X-43

Boyle Engineering Corporation
consulting engineers / architects

B-L04-125-06 D-2053

SHEET NO. 22 OF 23 SHEETS

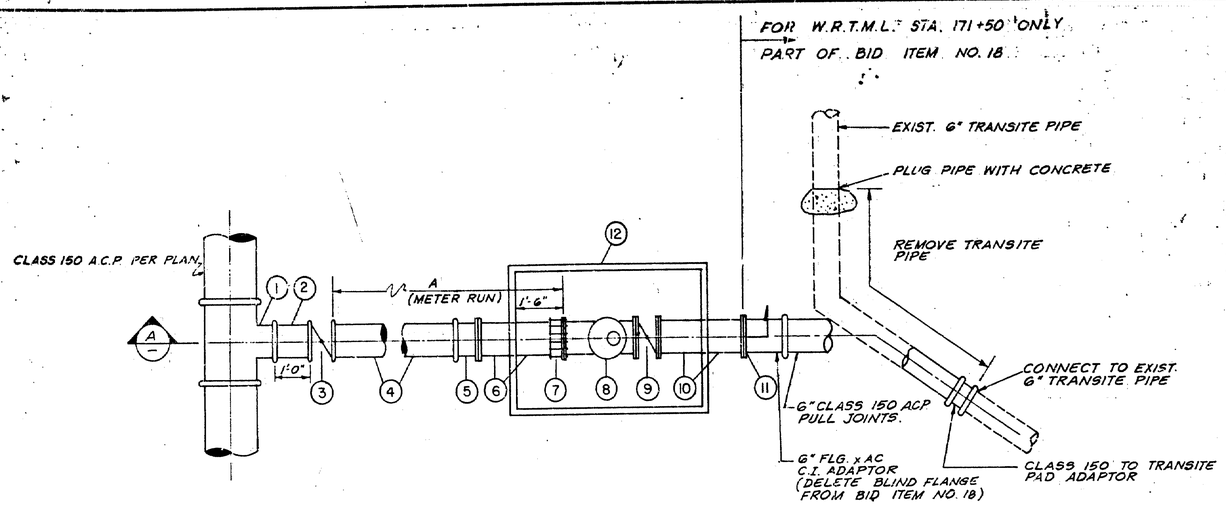

PLAN

METER VAULT MATERIALS LIST	
ITEM	DESCRIPTION
1	AC X AC X AC C.I. TEE
2	A.C.P. N.O.A., CLASS 150
3	BUTTERFLY VALVE, AC X AC, SEE TYP. DETAIL 5, SHT. 17
4	A.C.P., CLASS 150
5	AC X FLG. C.I. ADAPTOR
6	FLG. X F.E. C.I. SPUOL
7	FLANGED COUPLING ADAPTOR, "ROCKWELL" 1972 OR APPROV. EQUAL
8	FLANGED METER, MACHOMETER MCO 500-150
9	BUTTERFLY VALVE, FLANGED, FRATT OR APPROV. EQUAL, REMOVABLE HAND WHEEL
10	FLG. C.I. SPOOL, 3-4" LONG
11	BLIND FLANGE
12	PRECAST CONCRETE VAULT WITH GALVANIZED COVER, LOCKABLE HINGED, REA OR APPROV. EQUAL

CONSTRUCTION NOTES:
(1) DIMENSIONS + PT. CALLOUTS ARE FOR LEGEND, NO PLANS
(2) PIPE DIAMETER TO MATCH METER SIZE

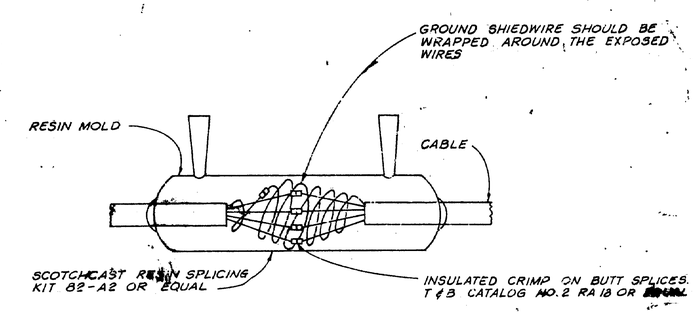

DIRECT BURIAL COMMUNICATIONS CABLE INLINE SPLICING

DETAIL 3
N.T.S.

LEGEND					
	PIPELINE	STATION	C.I. TEE	METER SIZE	A MINIMUM
BID ITEM NO. 17	WRTM	STA. 63+60	18"x18"x10"	10"	8'-4"
BID ITEM NO. 18	WRTML	STA. 162+40	12"x12"x8"	8"	6'-8"
BID ITEM NO. 19	WRTML	STA. 171+50	12"x12"x6"	6"	5'-0"

PROVIDED BY DISTRICT SEE PLAN

TELEMETRY CABLE NOTES:

1. 12 PAIR CONDUCTOR CABLE BETWEEN CABLE PULL BOX NO. 1 AT WEST RESERVOIR PIPELINE STA. 2+30 AND CABLE PULL BOX NO. 2 AT WEST RESERVOIR PIPELINE STA. 46+30.
2. 6 PAIR CONDUCTOR CABLE BETWEEN CABLE PULL BOX NO. 2 AT WEST RESERVOIR PIPELINE STA. 46+30 AND CABLE PULL BOX NO. 3 AT WEST RESERVOIR PIPELINE STA. 69+71.
3. 6 PAIR CONDUCTOR CABLE BETWEEN CABLE PULL BOX NO. 2 AT RECLAIMED WATER PIPELINE STA. 7+00 (W.R.T.M. STA. 7+00), AND CABLE PULL BOX NO. 4 AT RECLAIMED WATER PIPELINE STA. 54+67.

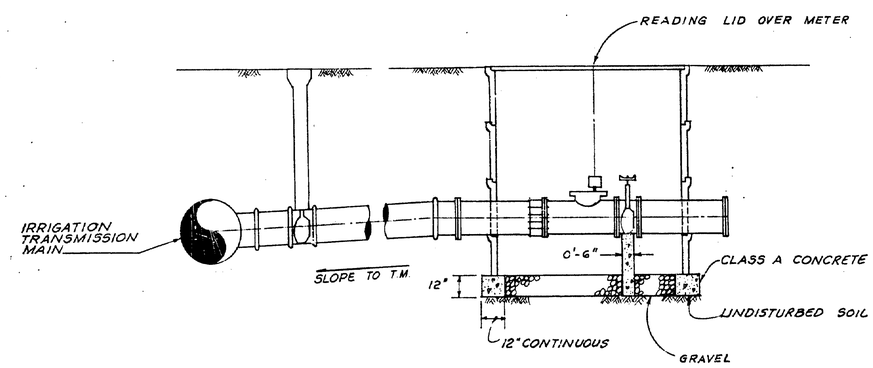

SECTION 4

IRRIGATION METER VAULT

DETAIL 1
N.T.S.

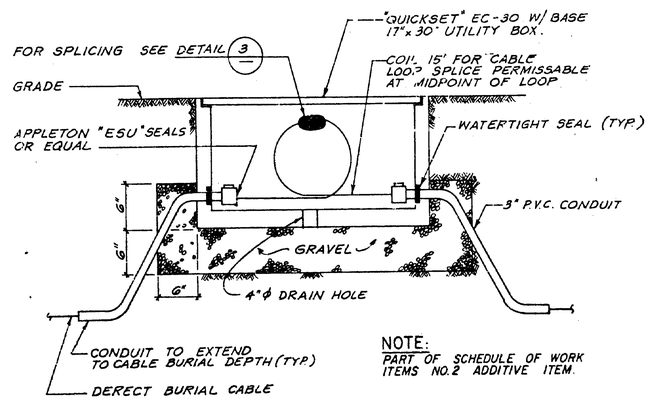

NOTE:
PART OF SCHEDULE OF WORK ITEMS NO. 2 ADDITIVE ITEM.

DERECT BURIAL COMMUNICATIONS CABLE PULL BOX

DETAIL PULL BOX 2
N.T.S.

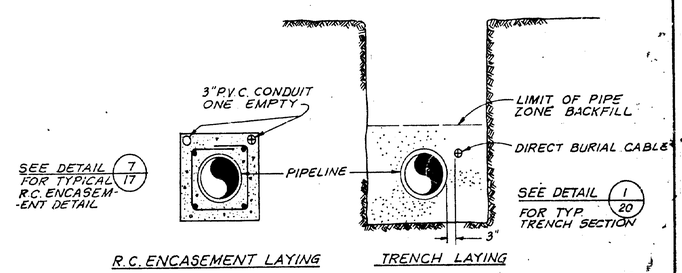

DIRECT BURIAL CABLE PLACEMENT

DETAIL 4
N.T.S.

LOS ALISOS WATER DISTRICT
ORANGE COUNTY, CALIFORNIA

WEST TRANSMISSION MAINS
DETAILS 4

REV	DATE	DESCRIPTION	APR
4	10/25	ADDENDUM NO. 1 REVISION	R.P.K.

DESIGN R.P.K. DRAWN J.C. CHECKED V.E.O
Boyle Engineering Corporation — consulting engineers / architects
DATE AUG. 1979 F.B. X-43 B-L04-125-06 D-2053
SHEET NO. 23 OF 23 SHEETS

CAPITAL IMPROVEMENT PLANS FOR LAKE FOREST ZONE 2 WEST RESERVOIR DEBRIS BASIN & OVERFLOW PIPE REALIGNMENT

IRWD CODE 5790

PROJECT 11666 (4132)

GENERAL NOTES:

1. STATIONING REFERS TO PIPE STATIONING. DISTANCES SHOWN IN PROFILE AND IN THE ESTIMATED QUANTITIES ARE HORIZONTAL DISTANCES. PIPELINE SLOPES SHOWN ON PROFILE SECTIONS REPRESENT SLOPE OF PIPE BASED ON PIPELINE HORIZONTAL LENGTHS.
2. LOOSE EXCAVATED MATERIAL SHALL NOT BE PLACED OR STORED IN WATERWAYS OR STORM DRAIN CHANNELS. ALL EXCESS EXCAVATED SOIL AND MATERIALS SHALL BE REMOVED AND DISPOSED OF IN A PROPER AND LEGAL MANNER BY THE CONTRACTOR.
3. ALL DISTURBED SURFACE AREAS SHALL BE SHAPED TO FACILITATE DRAINAGE & AVOID PONDING AND RESTORED TO NEAR NATURAL OR PRE-CONSTRUCTION CONDITIONS.
4. INFORMATION ON EXISTING UTILITIES AND OTHER SUB-STRUCTURES WAS OBTAINED FROM THE APPROPRIATE AGENCIES. EXISTING UTILITIES SHALL BE MAINTAINED IN PLACE BY THE CONTRACTOR, UNLESS OTHERWISE NOTED ON THE PLANS. UNLESS OTHERWISE DIMENSIONED, LOCATIONS OF EXISTING UTILITIES AND SUB-STRUCTURES SHOWN ON THE DRAWINGS ARE APPROXIMATE ONLY. THE CONTRACTOR SHALL POTHOLE AND VERIFY EXACT LOCATIONS, ELEVATIONS AND DIMENSIONS IN THE FIELD PRIOR TO CONSTRUCTION IN THE AREA OF THE SPECIFIC SUB-STRUCTURES AND AT ALL CONNECTION POINTS. THE CONTRACTOR SHALL FIELD VERIFY LOCATION OF ALL WET AND DRY UTILITY SERVICES CROSSED AND PROTECT THEM IN PLACE. TRAFFIC SIGNAL CONDUIT AND LOOPS ARE SHOWN ON THE PLANS WHERE DETAIL PLANS ARE AVAILABLE. HOWEVER, THE PLANS DO NOT REFLECT ALL OF THE TRAFFIC SIGNAL CONDUITS AND LOOPS. THE CONTRACTOR SHALL FIELD VERIFY LOCATION OF ALL TRAFFIC SIGNAL LOOPS, CONDUITS AND WIRING AND PROTECT THEM IN PLACE OR REPLACE THEM PER THE PROJECT MANUAL.
5. ADEQUATE TRAFFIC AND SAFETY MEASURES SHALL BE MAINTAINED BY THE PROPER SCHEDULING OF FACILITY INSTALLATION, PAVEMENT RECONSTRUCTION, APPROVED TRAFFIC CONTROL DEVICES, AND IN ACCORDANCE WITH SECURED OR PROVIDED PERMITS. TRAFFIC CONTROL WITHIN THE CITY OF IRVINE AND CITY OF LAKE FOREST SHALL BE IN ACCORDANCE WITH THE RESPECTIVE CITY REQUIREMENTS.
6. CONTRACTOR SHALL REPLACE ALL EXISTING REFLECTION MARKERS DISTURBED ALONG THE ALIGNMENT PER THE STANDARDS OF THE AGENCY HAVING JURISDICTION. ALL THE EXISTING STREET LIGHTING INSTALLATIONS SHALL BE PROTECTED IN PLACE. DISRUPTED OR DAMAGED STREET LIGHTING SYSTEMS SHALL BE REPAIRED OR REPLACED TO THE SATISFACTION OF THE AGENCY HAVING JURISDICTION OVER THE AREA. DAMAGED STREET LIGHT CONDUIT OR CABLE SHALL BE REPLACED FROM POLE TO POLE.
7. ALL APPROACHES TO PRIVATE AND PUBLIC DRIVEWAYS AND INTERSECTING STREETS SHALL BE KEPT OPEN TO TRAFFIC AT ALL TIMES. CONTRACTOR SHALL INFORM ALL PROPERTY OWNERS OR BUSINESSES A MINIMUM OF 48 HOURS PRIOR TO PERFORMING ANY CONSTRUCTION WHICH WILL IMPEDE THE NORMAL ACCESS THROUGH THEIR DRIVEWAYS.
8. ACTUAL FIELD CONDITIONS MAY VARY FROM THOSE SHOWN ON PLAN AND PROFILE DRAWINGS. THE CONTRACTOR SHALL BE RESPONSIBLE FOR VERIFYING ACTUAL ABOVE GROUND AND UNDERGROUND CONDITIONS PRIOR TO START OF CONSTRUCTION.
9. PRIOR TO ORDERING CLOSURE PIECES THE CONTRACTOR SHALL VERIFY THE OUTSIDE DIAMETER OF THE EXISTING PIPE.
10. CONTRACTOR SHALL SUBMIT TRAFFIC CONTROL PLANS FOP CITY OF IRVINE APPROVAL PRIOR TO CONSTRUCTION.

IRWD DOMESTIC WATER NOTES:

A. ALL WATER SYSTEM WORK SHALL CONFORM TO THE DISTRICT'S "PROCEDURAL GUIDELINES AND GENERAL DESIGN REQUIREMENTS" AND "CONSTRUCTION MANUAL", AS LAST REVISED.

B. A PRE-CONSTRUCTION CONFERENCE OF REPRESENTATIVES FROM AFFECTED UTILITIES, AGENCIES AND THE CONTRACTOR SHALL BE HELD ON THE JOB SITE (OR A LOCATION APPROVED BY THE DISTRICT) AT LEAST FORTY-EIGHT (48) HOURS PRIOR TO START OF WORK.

C. THE DISTRICT ENGINEERING OFFICE SHALL BE CALLED FOR INSPECTION FORTY-EIGHT (48) HOURS BEFORE START OF WORK AT (949) 453-5615 OR (949) 453-5300.

D. THE PROPOSED WATER SYSTEM IS TO BE STAKED AT A MINIMUM 50-FOOT STATIONING IF THERE ARE NO EXISTING CURBS.

E. WATER METERS SHALL NOT BE LOCATED WITHIN A DRIVEWAY OR SIDEWALK. ALL WATER SERVICE LATERALS SHALL BE CONSTRUCTED PERPENDICULAR TO THE WATER MAIN WITHOUT BENDS OR ANGLES FROM THE CONNECTION POINT ON THE MAIN.

F. ALL MAIN LINE VALVES SHALL BE MAINTAINED SO AS TO BE ACCESSIBLE DURING TRACT DEVELOPMENT AND CONSTRUCTION. ALL VALVE STEM TOPS HAVING OVER 60-INCHES OF COVER REQUIRE AN EXTENSION MEETING DISTRICT STANDARDS.

G. IN RESIDENTIAL STREETS, THE TOP OF THE PIPE, 10-INCHES AND SMALLER, SHALL BE A MINIMUM OF 42-INCHES BELOW THE FINISHED STREET SURFACE AND 48-INCHES BELOW FINISHED STREET SURFACE FOR ALL PIPE 12-INCHES IN DIAMETER AND LARGER.

H. ALL FIRE HYDRANTS SHALL BE SET WITH THE BOTTOM FLANGE 4-INCHES ABOVE THE CONCRETE PAD OR SIDEWALK USING ONE SCORED-SPOOL AS INDICATED IN THE CONSTRUCTION MANUAL AND SHALL BE LOCATED A MINIMUM OF 3 FEET FROM THE ECR OR BCR AT INTERSECTION.

I. ALL WATER MAINS 4-INCHES THROUGH 12-INCHES SHALL BE AWWA C-900 (DR-14) AND AWWA C-905 (DR-18) FOR WATER MAINS LARGER THAN 12-INCHES, UNLESS OTHERWISE APPROVED BY THE DISTRICT.

J. NO "HOT-TAPS" OR OTHER TIE-IN CONNECTIONS SHALL BE MADE TO EXISTING DISTRICT WATER MAINS PRIOR TO CONDUCTING AND PASSING AN APPROVED PRESSURE TEST AND A BACTERIOLOGICAL TEST ON THE NEW WATER DISTRIBUTION SYSTEM.

K. TAPPING SLEEVES, WHERE CALLED FOR ON THE PLANS, SHALL BE PRESSURE TESTED IN AN APPROVED MANNER IN THE FIELD, IN THE PRESENCE OF THE DISTRICT REPRESENTATIVE, PRIOR TO TAPPING THE MAIN LINE. TAPPING OF THE MAIN LINE SHALL NOT PROCEED UNLESS A DISTRICT REPRESENTATIVE IS PRESENT. SIZE ON SIZE TAPS OF WATER MAINS ARE NOT ALLOWED.

L. WHERE METERS AND METER BOXES ARE LOCATED WITHIN SLOPES, THE ANGLE METER STOPS SHALL BE LOCATED SUCH THAT THE METERS AND BOXES ARE PARALLEL AND FLUSH, WITH THE FINISHED SURFACE. WHEREVER THE SURROUNDING GRADE EXCEEDS EIGHT (8%) PERCENT, OR IN THE OPINION OF THE DISTRICT REPRESENTATIVE, THE ADJACENT SLOPE IS TOO GREAT, A SMALL RETAINING WALL, CLEAR OF THE METER BOX, SHALL BE CONSTRUCTED TO THE SATISFACTION OF THE DISTRICT REPRESENTATIVE.

M. CURB FACES SHALL BE INSCRIBED WITH THE LETTER "W" INDICATING LOCATIONS OF ALL DOMESTIC WATER SERVICES. LETTER INSCRIPTION SHALL BE MADE USING A 4-INCH POWER TOOL WHEEL GRINDER.

N. INDIVIDUAL PRESSURE REGULATORS ARE REQUIRED BY THE UNIFORM PLUMBING CODE IF AVERAGE STATIC PRESSURE IN THE MAIN IS 80 PSI OR MORE.

O. CURBS SHALL BE INSCRIBED WITH TIE DOWNS FOR ALL VALVE LOCATIONS. LETTER INSCRIPTIONS SHALL BE MADE USING A 4-INCH POWER TOOL WHEEL GRINDER.

P. THE CONTRACTOR SHALL EXPOSE ALL POINTS OF CONNECTION TO THE EXISTING DOMESTIC WATER SYSTEM FOR VERIFICATION OF HORIZONTAL AND VERTICAL LOCATION BEFORE CONSTRUCTION.

Q. FINAL INSPECTION FOR WATERLINES MUST INCLUDE WATER SAMPLES THAT WILL BE TESTED FOR THE PRESENCE OF BACTERIA, CONDUCTIVITY, TURBIDITY AND ODOR. THE TURBIDITY MUST BE LESS THAN 2.5 NTU AND THE ODOR MUST BE LESS THAT 1.0 TON, NOT TO INCLUDE CHLORINE ODOR, TO BE ACCEPTABLE. TWO (2) CONSECUTIVE "PASSING" SAMPLES ARE REQUIRED FOR ACCEPTANCE.

R. THE CONTRACTOR WORKING ON IRWD WATERLINES MUST HAVE A C-34 LICENSE ISSUED BY THE STATE CONTRACTOR'S LICENSE BOARD OR CLASS "A" GENERAL CONTRACTORS LICENSE (WITH SPECIAL APPROVAL OF THE DISTRICT, BASED UPON ACTUAL WATER AND SEWER PIPELINE CONSTRUCTION EXPERIENCE.)

S. CONTRACTOR SHALL OBTAIN AND SHOW PROOF OF A CONSTRUCTION DEWATERING PERMIT FROM THE STATE OF CALIFORNIA, REGIONAL WATER QUALITY CONTROL BOARD PRIOR TO THE START OF CONSTRUCTION.

T. ALL BUTTERFLY VALVES 12-INCHES IN DIAMETER AND LARGER SHALL BE FLANGED AND SHALL BE BI-DIRECTIONALLY TESTED WITH THE OPERATOR INSTALLED IN ACCORDANCE WITH THE DISTRICT'S REQUIREMENTS OUTLINED IN THE CONSTRUCTION MANUAL.

LEGEND OF ABBREVIATIONS

C&G	CURB AND GUTTER
CL	CLASS
DIA.	DIAMETER
D.I.	DUCTILE IRON
DWG	DRAWING
E	EASTING
EX. / EXIST.	EXISTING
FE	FLANGED END
FM	FORCE MAIN
FS	FINISHED SURFACE
HD	HOT DIPPED
INV	INVERT
MIN.	MINIMUM
N	NORTH/NORTHING
N.T.S.	NOT TO SCALE
PR.	PROPOSED
PVC	POLYVINYL CHLORIDE
PO	PUSH-ON
RW	RECYCLED WATER
R/W	RIGHT OF WAY
RWGV	RESILIENT WEDGE GATE VALVE
SCH	SCHEDULE
SPEC.	SPECIFICATION
STA	STATION
STD.	STANDARD
SS	SANITARY SEWER
SD	STORM DRAIN
TELE	TELEPHONE
TYP.	TYPICAL
W	WEST
W/	WITH
WT	WATER

LEGEND OF SYMBOLS

—·—	CENTERLINE
— — —	RIGHT-OF-WAY
— — SS — —	EXISTING SEWER LINE (SIZE PER PLAN)
— — W — —	EXISTING WATER LINE (SIZE PER PLAN)
— — RW — —	EXISTING RECLAIMED WATER LINE (SIZE PER PLAN)
= = = = = =	STORM DRAIN
—○—	SEWER MANHOLE
———	PROPOSED UTILITY LINE (CURRENT SHEET)
—SS—	PROPOSED SEWER LINE
—W—	PROPOSED WATER LINE
—RW—	PROPOSED RECLAIMED WATER LINE
—⊠—	CATHODIC TEST STATION
—○—	BLOW-OFF / FLUSH-OUT
—◁—	AIR/VACUUM VALVE
—⊗—	WATER VALVE
—⧖—	FIRE HYDRANT

UTILITY AND AGENCY INDEX

IRWD (WATER OPERATIONS SUPERVISOR)	(949) 453-5674
IRWD (WATER OPERATIONS MANAGER)	(949) 453-5745
IRWD (COLLECTION SYSTEM MANAGER)	(949) 453-5815
IRWD (INSPECTOR)	(949) 453-5615
IRWD (ENGINEERING)	(949) 453-5300
COUNTY OF ORANGE	(714) 834-5707
SOUTHERN CALIFORNIA GAS CO.	(714) 634-3117
PACIFIC BELL	(714) 259-4449
SOUTHERN CALIFORNIA EDISON CO.	(714) 973-5449
COMCAST CABLE VISION	(714) 338-2000
COX COMMUNICATIONS	(949) 546-4622
UNDERGROUND SERVICE ALERT	(800) 227-2600
CITY OF LAKE FOREST	(949) 461-3480

BENCH MARK:

3JU-20-90 ELEV: 729.494
DATUM: NGVD 29, 1995 O.C.S. ADJUSTMENT

3 3/4" OCS ALUMINUM BENCHMARK DISK STAMPED "3JU-20-90", SET IN THE NORTHEAST CORNER OF AN 11FT. BY 4FT. CONCRETE CATCH BASIN. MONUMENT IS LOCATED IN THE NORTHEAST CORNER OF THE INTERSECTION OF LAKE FOREST DRIVE & VISTA TERRACE, 47FT. EASTERLY OF THE CENTERLINE OF LAKE FOREST DR. & 50FT. NORTHERLY OF THE CENTERLINE OF VISTA TERRACE. MONUMENT IS SET LEVEL WITH THE SIDEWALK

BASIS OF BEARINGS:

THE BEARINGS SHOWN HEREON ARE BASED ON THE GRID BEARING "N 28°10'54" E" BETWEEN O.C.S. HORIZONTAL CONTROL STATION GPS NO. 6733 AND GPS NO. 6734 PER RECORDS ON FILE IN THE OFFICE OF THE ORANGE COUNTY SURVEYOR.

SHEET INDEX

SHEET No.	DRAWING No.	DESCRIPTION
1	T1	TITLE SHEET
2	W1	TANK OVERFLOW PIPE PLAN & PROFILE, DETAILS

NOTICE TO CONTRACTOR

PURSUANT TO ASSEMBLY BILL 3019, NO EXCAVATION PERMIT IS VALID UNLESS THE FOLLOWING IS PERFORMED:

1. UNDERGROUND SERVICES ALERT HAS BEEN CONTACTED AND HAS PROVIDED INQUIRY I.D. # _____
2. THE UNDERSIGNED AGREES TO CONTACT AND OBTAIN AN INQUIRY I.D.# FROM UNDERGROUND SERVICES ALERT (800) 227-2600 AT LEAST TWO (2) WORKING DAYS PRIOR TO THE COMMENCEMENT OF EXCAVATION.

SIGNED _____ DATE _____

APPROVED:

IRVINE RANCH WATER DISTRICT
EXECUTIVE DIRECTOR OF ENGINEERING AND PLANNING

Kevin L Burton 11/28/12
KEVIN BURTON R.M.E. 28832 DATE

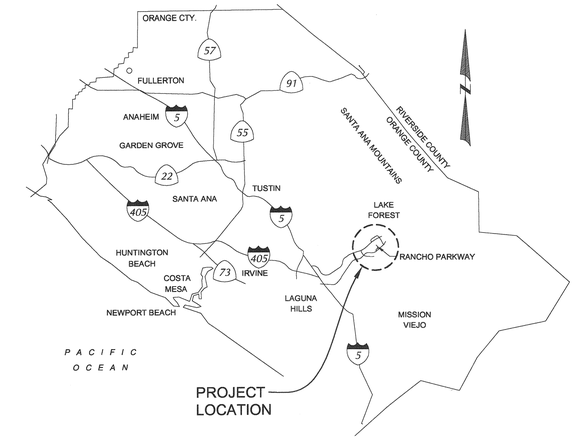

LOCATION MAP

NOT TO SCALE

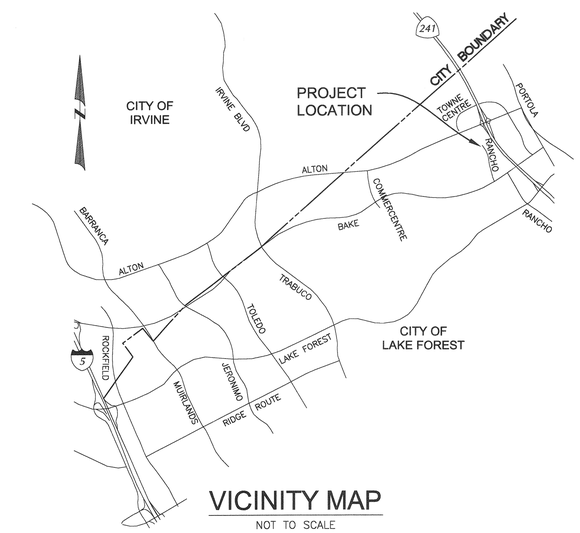

VICINITY MAP

NOT TO SCALE

NO.	QUANTITIES DESCRIPTION	QTY.	UNITS
	ROUGH GRADING		
(4)	CONSTRUCT DOWNDRAIN PER O.C.P.W. STD. 1321 & DETAIL ON SHEET 2	213	LF
(11)	CONSTRUCT CONCRETE INTERCEPTOR DRAIN PER O.C.P.W. STD. 1332 & DETAIL ON SHEET 2	328	EA
(13)	INSTALL RIP-RAP PER DETAIL ON SHEET 2	4	EA
(15)	REMOVE EXIST. STORM DRAIN PIPE	86	LF
(17)	REMOVE EXIST. RIP-RAP	1	LS
(31)	*CONST. 3" A.C. OVER 6" A.B. WITH SEALCOAT (SEE NOTE BELOW)	230	SF
(32)	CONST. CHAIN LINK FENCE AND GATES PER APWA STD. PLAN 600-3	379	LF
(34)	CONST. REINFORCED CONCRETE COLLAR PER O.C.P.W. STD. 1317	1	EA
(35)	CONST. CONCRETE PIPE SLOPE ANCHOR PER IRWD STD. S-8	4	EA
(36)	INSTALL 18" R.C.P. (D-LOAD PER PROFILE) W/BEDDING PER O.C.P.W. STD 1319	141	LF
(37)	CONST. JUNCTION STR. TYPE I PER O.C.P.W. STD. 1310	1	EA

*PAVEMENT SECTION IS PRELIMINARY. FINAL SECTION TO BE DETERMINED BY SOILS ENGINEER.

IRWD CODE 5790

No.	DATE	REVISIONS	APPROVED

DESIGNED: EAG
DRAWN: EAG
CHECKED: EAM

HUNSAKER & ASSOCIATES IRVINE, INC.
PLANNING ▪ ENGINEERING ▪ SURVEYING
Three Hughes ▪ Irvine, CA 92618 ▪ PH: (949) 583-1010 ▪ FX: (949) 583-0759

IRVINE RANCH WATER DISTRICT

EDWARD A. MANDICH RCE 59089 — PROJECT MANAGER — 11-27-12 DATE
EDWARD A. GOMEZ RCE 36493 — PROJECT ENGINEER — 11-27-12 DATE
PROJECT ENGINEER — 11/28/12 DATE

REGISTERED PROFESSIONAL ENGINEER EDWARD A. MANDICH No. 59089 CIVIL STATE OF CALIFORNIA

IRVINE RANCH WATER DISTRICT
BAKER RANCH

CAPITAL IMPROVEMENT PLANS FOR
LAKE FOREST ZONE 2 WEST RESERVOIR DEBRIS BASIN
& OVERFLOW PIPE REALIGNMENT
PROJECT (11666) 4132

TITLE SHEET

DRAWING T1
SHEET 1 OF 2

W.O. 0061-4225 OVERFLOW PIPE REALIGNMENT
DOC: 70308
ROOM:
BIN:

PLOTTED BY: dien DATE: Nov. 16, 2012 TIME: 01:55 PM F:\0418\Engineering\SA_Phase 1\IRWD Overflow Realignment\IRWD_ Sheet01.dwg

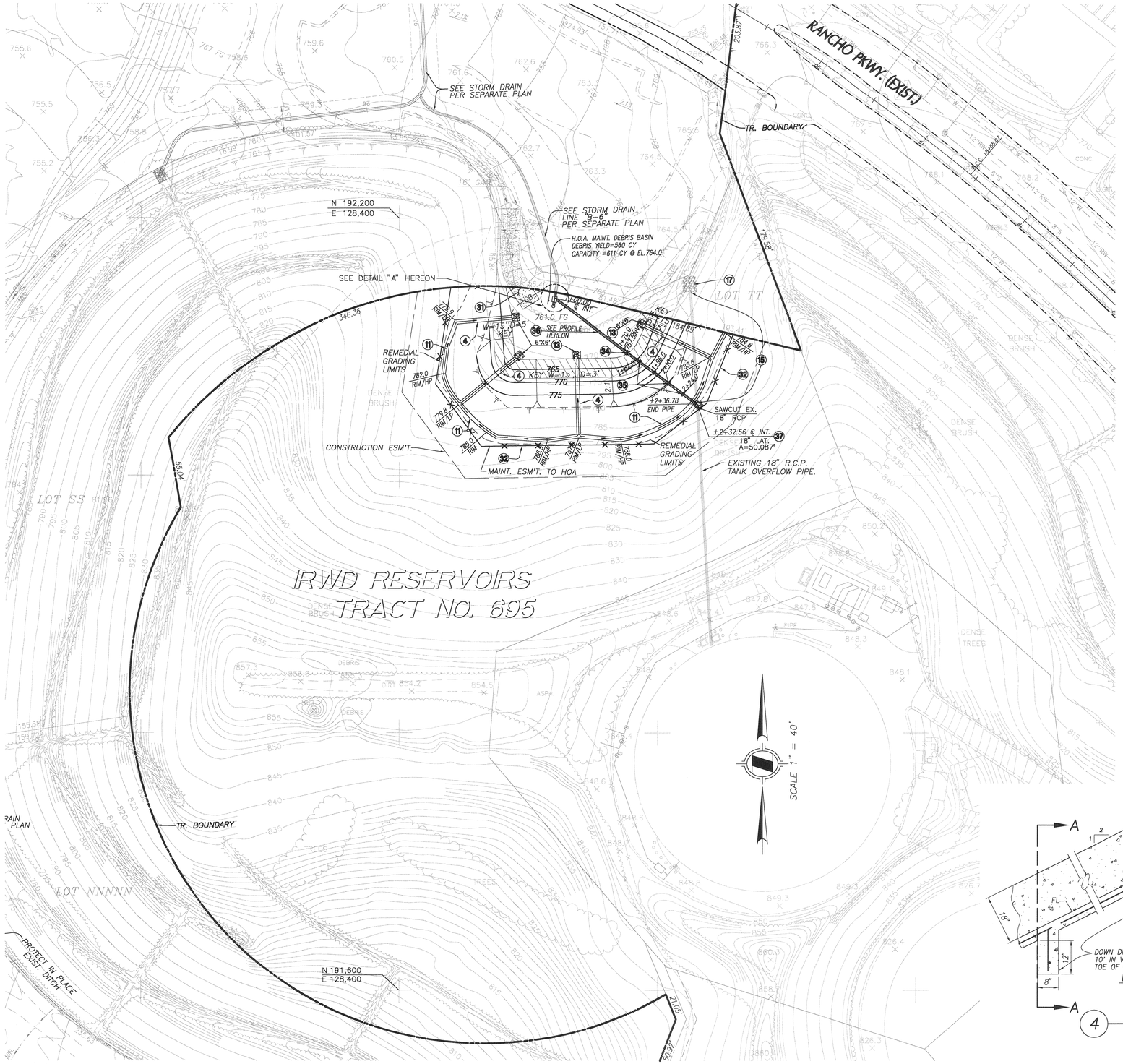

CONSTRUCTION NOTES

- (4) CONSTRUCT DOWNDRAIN PER O.C.P.W. STD. 1321 & DETAIL HEREON
- (11) CONSTRUCT CONCRETE INTERCEPTOR DRAIN PER O.C.P.W. STD. 1332 & DETAIL HEREON
- (13) INSTALL RIP-RAP PER DETAIL HEREON
- (15) REMOVE EXIST. STORM DRAIN PIPE
- (17) REMOVE EXIST. RIP-RAP
- (31) *CONST. 3" A.C. OVER 6" A.B. WITH SEALCOAT (SEE NOTE BELOW)
- (32) CONST. CHAIN LINK FENCE AND GATES PER APWA STD. PLAN 600-3
- (34) CONST. REINFORCED CONCRETE COLLAR PER O.C.P.W. STD. 1317
- (35) CONST. CONCRETE PIPE SLOPE ANCHOR PER IRWD STD. S-8
- (36) INSTALL 18" R.C.P. (D-LOAD PER PROFILE) W/BEDDING PER O.C.P.W. STD 1319
- (37) CONST. JUNCTION STR. TYPE I PER O.C.P.W. STD. 1310

*PAVEMENT SECTION IS PRELIMINARY. FINAL SECTION TO BE DETERMINED BY SOILS ENGINEER AND APPROVED BY CITY

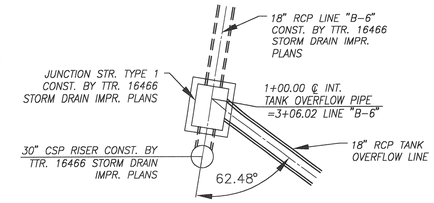

DETAIL "A"

N.T.S.

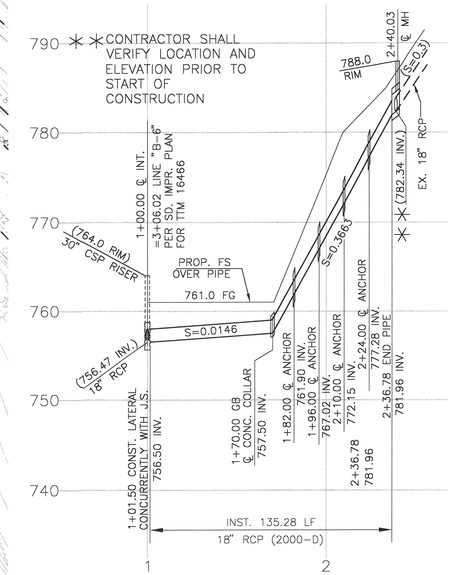

TANK OVERFLOW PIPE PROFILE

PROFILE SCALE: HORIZ. 1"=40'
VERT. 1"= 8'

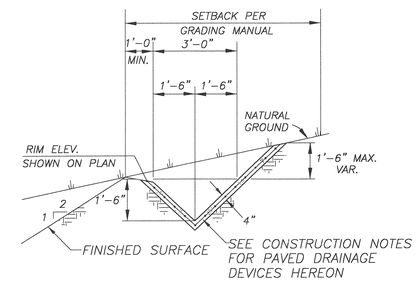

(11) INTERCEPTOR DRAIN

NTS

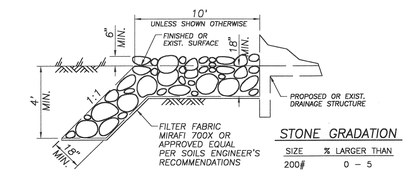

STONE GRADATION

SIZE	% LARGER THAN
200#	0 – 5
100#	50 – 100
50#	95 – 100

(13) RIP-RAP DETAIL

NTS

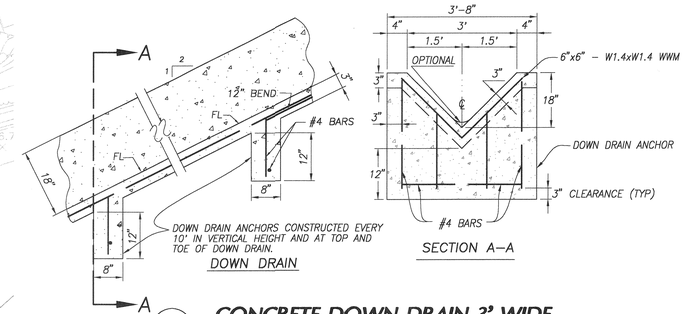

(4) CONCRETE DOWN DRAIN 3' WIDE

SEE ALSO OCPW STD 1321 NTS

CONSTRUCTION NOTES FOR PAVED DRAINAGE DEVICES

1. APPROVED MATERIAL FOR CONSTRUCTION OF DEVICE IS EITHER 3" CONC. W/ NO. 4 BARS LONGITUDINAL 24" O.C. WITH NO. 4 TIE BARS 48" O.C. OR 3" GUNITE W/ 6"X 6"– W 1.4 X W 1.4 W.W.F. (WELDED WIRE FABRIC) OR APPROVED EQUAL.
2. INSPECTION OF GRADED SWALE IS REQUIRED PRIOR TO INSTALLATION OF PAVING.
3. GROUND SHALL BE PRE–WET TO THE SATISFACTION OF THE BUILDING OFFICIAL OR ENGINEER PRIOR TO PLACEMENT OF CONCRETE.
4. PAVED DEVICE SHALL BE CURED WITH A MOISTURE LOSS RETARDANT.
5. PUMPCRETE IS AN ACCEPTABLE SUBSTITUTE FOR GUNITE & MAY BE INSTALLED WITH 6"X 6" W 1.4 X W 1.4 WELDED WIRE MESH (W.W.M.).
6. CONCRETE SHALL HAVE A MINIMUM ULTIMATE COMPRESSION STRENGTH AT 28 DAYS OF 2500 P.S.I. CONCRETE MAY BE PNEUMATICALLY PLACED AND SHALL CONFORM TO SECTION 2621 OF THE UNIFORM BUILDING CODE.
7. ANCHORS SHALL BE CONSTRUCTED IN ACCORDANCE WITH O.C.P.W. STANDARD PLAN 1321 (SHEET 2) WHEN SLOPE EQUALS OR EXCEEDS 2:1.
8. GROUTED RIP–RAP SHALL BE A MIN. 12" ROCK WITH MIN. 6" EMBEDMENT IN P.C.C. OR GUNITE.

40 20 0 40 80
GRAPHIC SCALE: 1"=40'

IRWD CODE 5790

No.	DATE	REVISIONS	APPROVED

DESIGNED: EAG
DRAWN: EAG
CHECKED: EAM

HUNSAKER & ASSOCIATES IRVINE, INC.
PLANNING ▪ ENGINEERING ▪ SURVEYING
Three Hughes ▪ Irvine, CA 92618 ▪ PH: (949) 583-1010 ▪ FX: (949) 583-0759

IRVINE RANCH WATER DISTRICT

EDWARD A. MANDICH RCE 59089 — PROJECT MANAGER — 11-27-12 DATE
EDWARD A. GOMEZ RCE 36493 — PROJECT ENGINEER — 11-27-12 DATE
PROJECT ENGINEER — 11/27/12 DATE

REGISTERED PROFESSIONAL ENGINEER EDWARD A. MANDICH No. 59089 CIVIL STATE OF CALIFORNIA

IRVINE RANCH WATER DISTRICT
BAKER RANCH

CAPITAL IMPROVEMENT PLANS FOR
LAKE FOREST ZONE 2 WEST RESERVOIR DEBRIS BASIN
& OVERFLOW PIPE REALIGNMENT
PROJECT (11666) 4132

DRAWING W1
SHEET 2 OF 2

PLOTTED BY: dien DATE: Nov. 06, 2012 TIME: 09:42 AM F:\0418\Engineering\SA_Phase 1\IRWD Overflow Realignment\IRWD_Sheet02.dwg

W.O.: 0061-425 OVERFLOW PIPE REALIGNMENT
DOC: 70308
BIN:
ROOM:

CONSTRUCTION PLANS FOR THE ZONE B 7.8 MG RECLAIMED WATER RESERVOIR

LOS ALISOS WATER DISTRICT

ORANGE COUNTY, CALIFORNIA

DECEMBER 1986

BOARD OF DIRECTORS

GEORGE D. STRINGER - PRESIDENT
WILLIAM F. TRITT, HARRY C. JOHNSON
SANDRA G. BAUER, ALWIN V. DIERKER

SHEET INDEX

SHEET NO.	DESCRIPTION
1	TITLE SHEET
2	VICINITY AND LOCATION MAP
3	GRADING AND PLOT PLAN
4	INLET/OUTLET PIPE PLAN AND PROFILE
5	CURB & GUTTER, GRADING SECTION
6	MISCELLANEOUS DETAILS
7	MISCELLANEOUS DETAILS
8	MISCELLANEOUS DETAILS
9	CATHODIC PROTECTION & MISCELLANEOUS DETAILS
10	FILL SITE

RECEIVED
FEB 9 1987
Los Alisos Wtr.

PREPARED IN THE OFFICE

OF

Boyle Engineering Corporation
1501 Quail Street
P.O. Box 3030
Newport Beach, California 92658-9020
714/476-3300

REGISTERED PROFESSIONAL ENGINEER HARVEY R. GOBAS C-026533 EXP. 03/31/88 CIVIL STATE OF CALIFORNIA

REGISTERED PROFESSIONAL ENGINEER LORI ANN GARCIA No C 040700 Expires 03/31/87 CIVIL STATE OF CALIFORNIA

E.T. McFadden Jr 1/5/87
E.T. McFADDEN DATE
GENERAL MANAGER
LOS ALISOS WATER DISTRICT

Harvey R. Gobas 12/31/86
HARVEY R. GOBAS RGE 26533 DATE
PROJECT MANAGER

Lori A. Garcia 1/5/87
LORI A. GARCIA RGE 40700 DATE
PROJECT ENGINEER

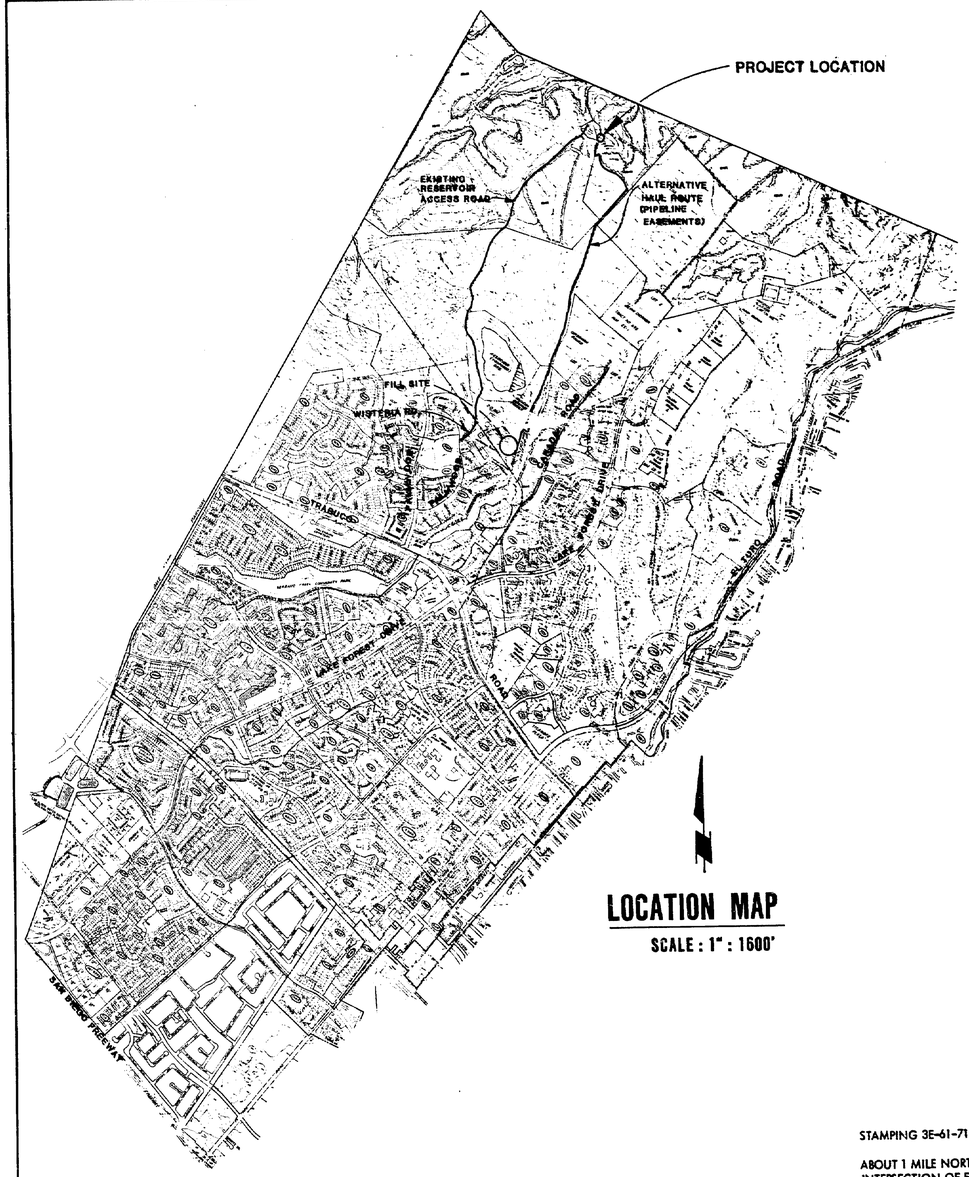

LOCATION MAP

SCALE : 1" : 1600'

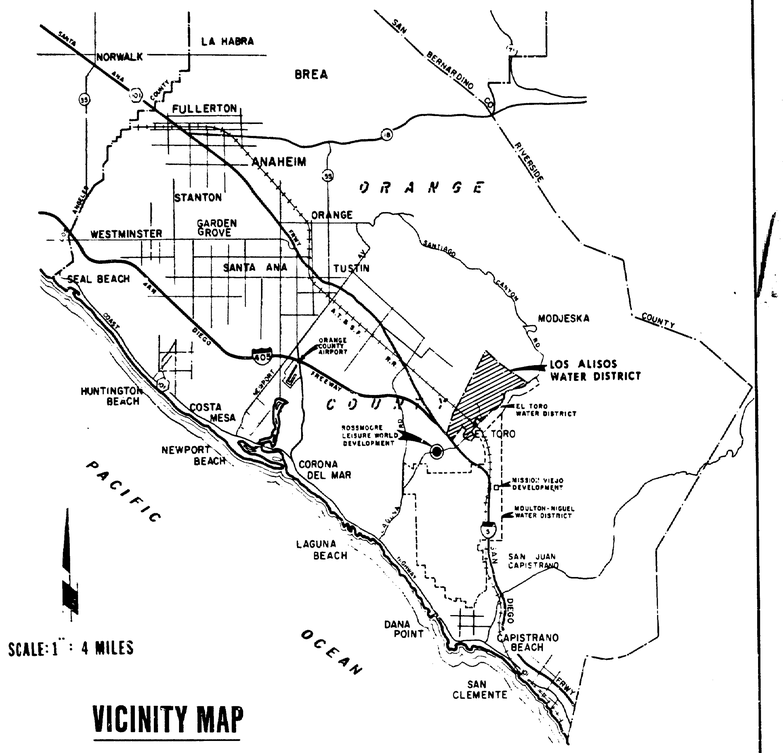

VICINITY MAP

BENCHMARK

STAMPING 3E-61-71 ALUMINUM CAP 1971 ELEVATION 444.561

ABOUT 1 MILE NORTHWEST ALONG TRABUCO ROAD, FROM THE INTERSECTION OF EL TORO ROAD AND ABOUT 0.2 OF A MILE NORTHWEST ALONG TRABUCO, FROM THE INTERSECTION OF CANADA ROAD, TO A CONCRETE BRIDGE OVERCROSSING OF SERRANO CREEK; 16 FEET NORTHEAST OF THE CENTER LINE OF TRABUCO, SET IN THE TOP OF THE NORTHEAST END OF CONCRETE RETAINING WALL OF BRIDGE LEVEL WITH THE ROAD.

BASIS OF BEARINGS

THE BEARING BETWEEN ORANGE COUNTY SURVEY MONUMENTS 3-1-11-68 AND 3-2-12-68 BEGIN N.56°36'39"W.

LOS ALISOS WATER DISTRICT
ORANGE COUNTY, CALIFORNIA

ZONE B 7.8 MG
RECLAIMED WATER RESERVOIR

REV	DATE	DESCRIPTION	APP

DESIGN L.G.
DRAWN D.B
CHECKED H.U.
DATE DEC. 1986
F.B. OC-L0426012 D2309

Boyle Engineering Corporation
consulting engineers / architects

SHEET NO. 2 OF 10 SHEETS

EXCAVATION AND FILL QUANTITIES

THESE QUANTITIES ARE APPROXIMATE AND MAY VARY DEPENDING ON ACTUAL FIELD CONDITIONS.

RESERVOIR SITE EXCAVATION..... 62,000cy
FILL AREA..... 2,100cy

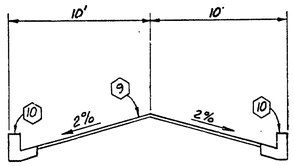

SECTION A
N.T.S.

CONSTRUCTION NOTES

1. SPIRAL STAIRS AND PLATFORM. SEE DETAILS SHEET 7
2. OVERFLOW AND DRAIN. SEE DETAIL 1 SHEET 8.
3. LIQUID LEVEL INDICATOR. SEE DETAIL 1 SHEET 7.
4. 12" DIA. INLET-OUTLET PIPE. SEE SHEET 4 FOR PLAN AND PROFILE.
5. GRATE INLET CATCH BASIN. SEE DETAIL 3 SHEET 8.
6. ROOF HATCH AND CENTERLINE OF INSIDE LADDER SEE DETAIL 2 SHEET 6.
7. 36" DIA. MANHOLE. SEE DETAIL 1 SHEET 6.
8. 24" DIA. MANHOLE. SEE DETAIL 1 SHEET 6.
9. 3" A.C. PAVEMENT OVER NATIVE.
10. CURB AND GUTTER. SEE SECTION A SHEET 5.
11. REMOVE EXISTING PVC WATER LINE AND TANK.
12. TEMPORARY 6' CHAINLINK FENCE.
13. 6' CHAINLINK FENCE.
14. 8" DIA. TANK DRAIN. SEE DETAIL 2 SHEETS.
15. CONTROL AND POTENTIAL TEST BOX AND $CuSO_4$ TEST STATIONS.
16. 4" CL. 150 PVC WATER LINE.
17. RYAN-HERCO ROUND-FLAT BOTTOM FIBERGLASS TANK SIZE NO. 7800-108 AND 7801-108 COVER SECTION. SEE B/5
18. 1" CORP STOP JONES J-50 OR APPROVED EQUAL IN OVERSIZE HALF COUPLING AND INSULATION BUSHING WELDED TO SIDE OF TANK. LOCATION OF CORP STOP TO BE DETERMINED BY DISTRICT AT TIME OF ERECTION OF TANK.
19. CROSS GUTTER. SEE DETAIL 1 SHEET 5.

GENERAL NOTES

1. Protect eucalyptus trees in place at easterly property line.
2. Blend top of variable cut and toe of variable fill slopes into slope of natural ground.

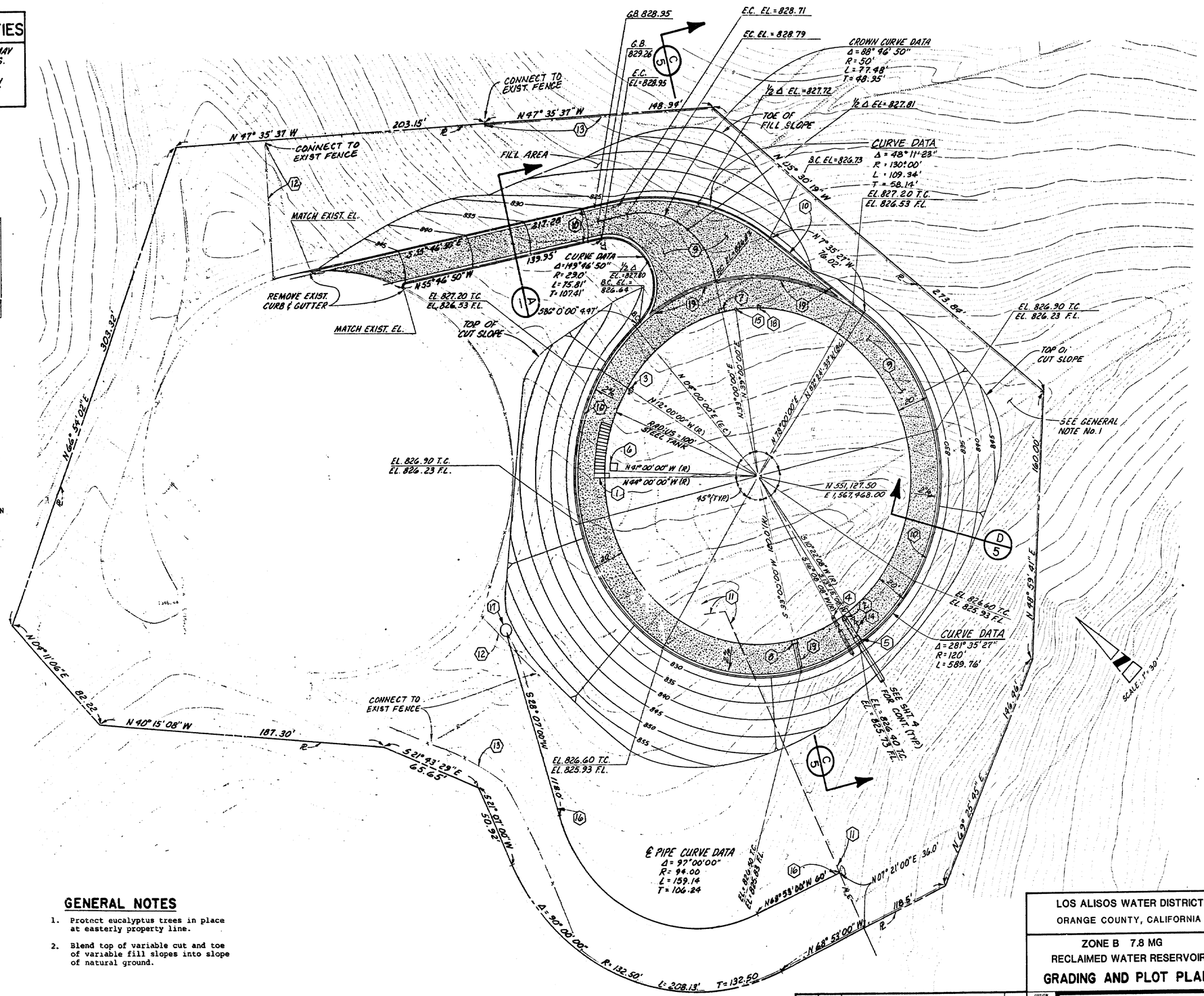

LOS ALISOS WATER DISTRICT
ORANGE COUNTY, CALIFORNIA

ZONE B 7.8 MG
RECLAIMED WATER RESERVOIR

GRADING AND PLOT PLAN

REV	DATE	DESCRIPTION	APP
1	1-87	ADDENDUM No. 1	H.R.G.

DESIGN L.G. DRAWN D.G.B. CHECKED H.U.

Boyle Engineering Corporation
consulting engineers / architects

DATE AUG. 1986 F.B. OC L04 260 12 D-2309

SHEET NO. 3 OF 10 SHEETS

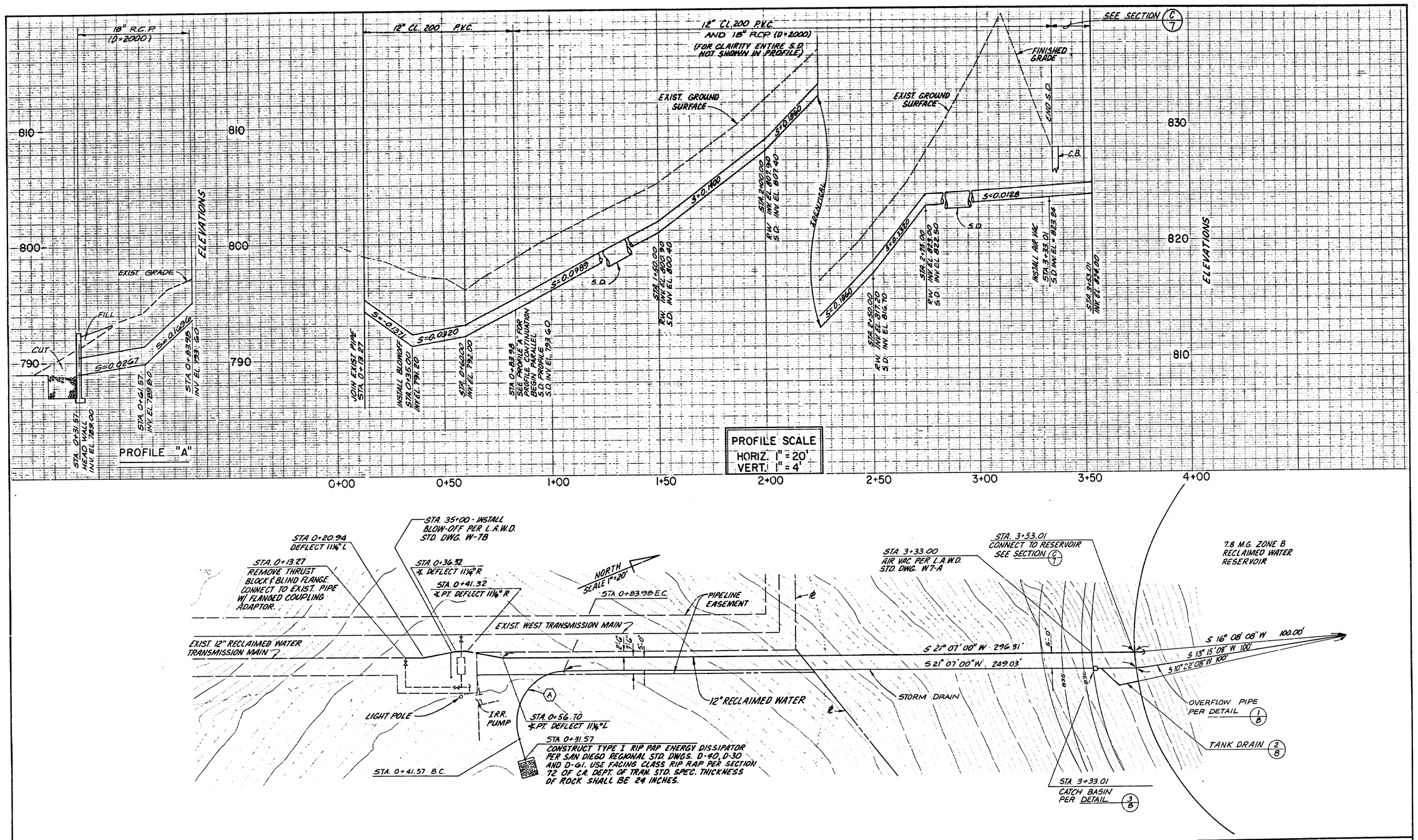

CURVE DATA

	Δ	R	L	T
A	107°59'46"	22.50'	42.41'	30.97'

REV	DATE	DESCRIPTION	APP.
1	1-87	ADDENDUM No. 1	H.R.G.

LOS ALISOS WATER DISTRICT
ORANGE COUNTY, CALIFORNIA

ZONE B 7.8 MG
RECLAIMED WATER RESERVOIR
INLET/OUTLET
PIPE PLAN AND PROFILE

Boyle Engineering Corporation
consulting engineers / architects

DESIGN L.G. | DRAWN D.G.B. | CHECKED H.U. | DATE AUG. 1986 | F.B. | O.C.-L04-260-12 | D-2309

SHEET NO. 4 OF 10 SHEETS

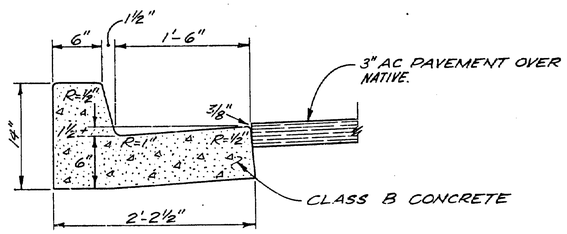

SECTION A
NOT TO SCALE

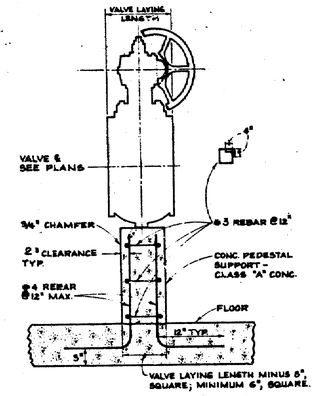

VALVE SUPPORT DETAIL B
N.T.S.

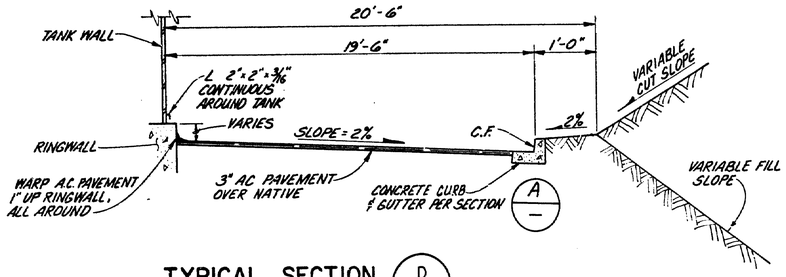

TYPICAL SECTION D
NOT TO SCALE

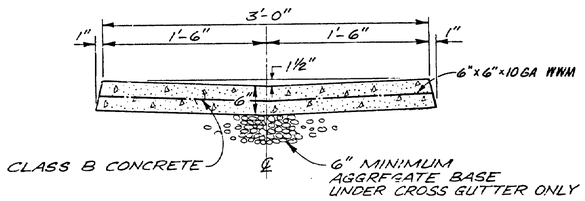

DETAIL i
NOT TO SCALE

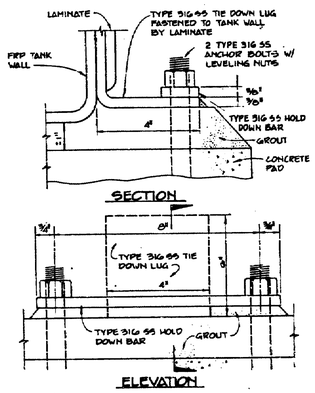

FRP TANK TIE DOWN LUG DETAIL C
N.T.S.

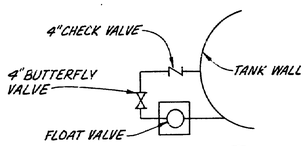

DETAIL A
N.T.S.

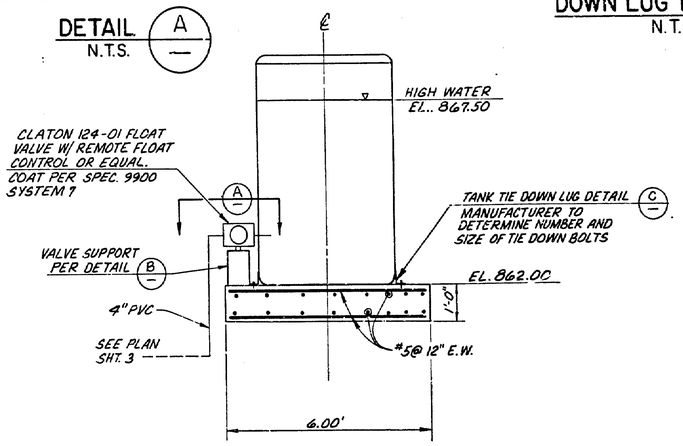

NOTE: TANK SHALL BE PAINTED PER SPEC. 9900 SYSTEM 41.

SECTION B
N.T.S.

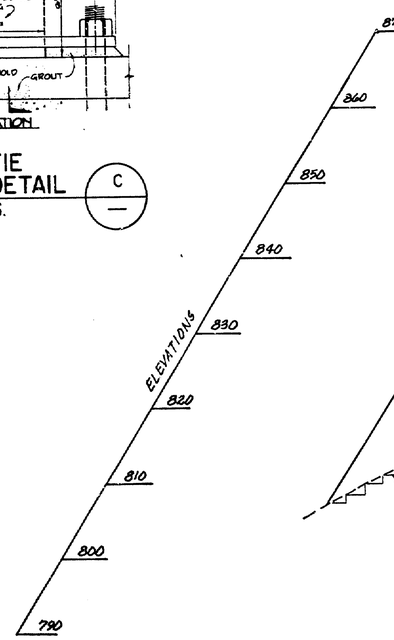

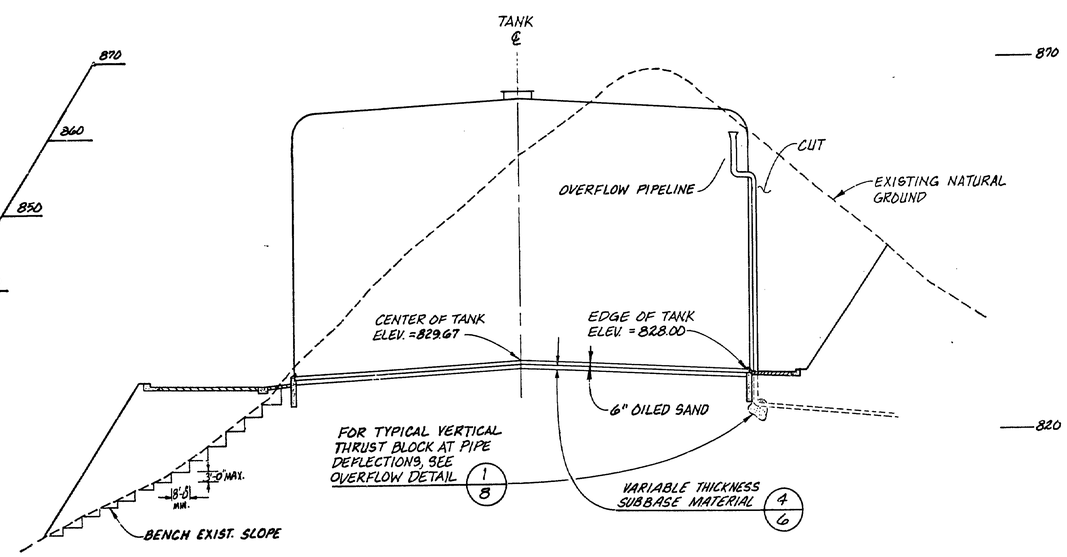

SECTION C
SCALE
HORIZ. 1" = 30'
VERT. 1" = 10'

LOS ALISOS WATER DISTRICT
ORANGE COUNTY, CALIFORNIA

ZONE B 7.8 MG
RECLAIMED WATER RESERVOIR
ACCESS/SERVICE ROAD, CURB & GUTTER AND GRADING SECTIONS

REV	DATE	DESCRIPTION	APP
1	1-87	ADDENDUM NO. 1	H.R.G.

DESIGN L.G. DRAWN D.G.B. CHECKED H.U. DATE AUG. 1986 P.R. OC-L04-260-12 D-2309

Boyle Engineering Corporation
consulting engineers / architects

SHEET NO. 5 OF 10 SHEETS

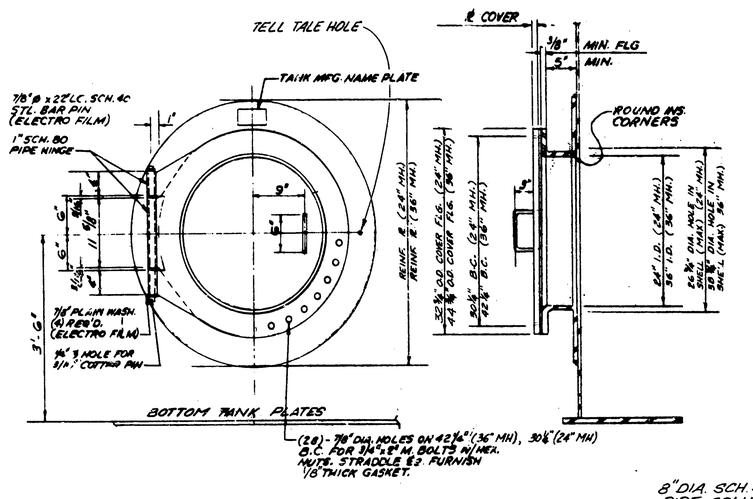

24" & 36" I.D. MANHOLE DETAIL (1/—)

NOT TO SCALE

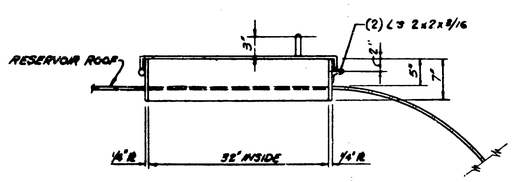

ROOF HATCH SECTION (B/—)

NOT TO SCALE

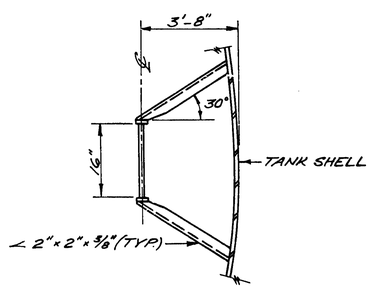

INTERIOR LADDER PLAN (3/—)

NOT TO SCALE

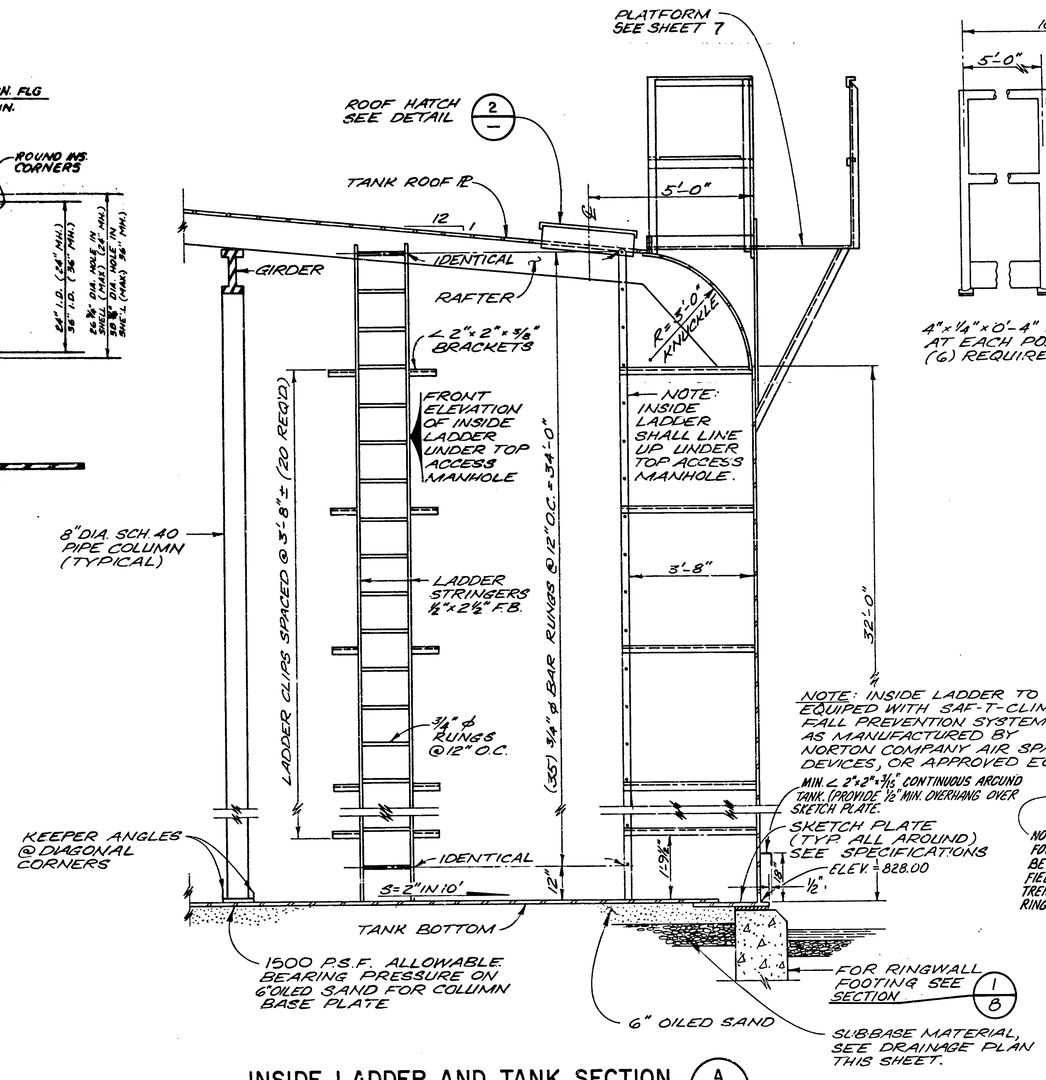

INSIDE LADDER AND TANK SECTION (A/—)

NOT TO SCALE

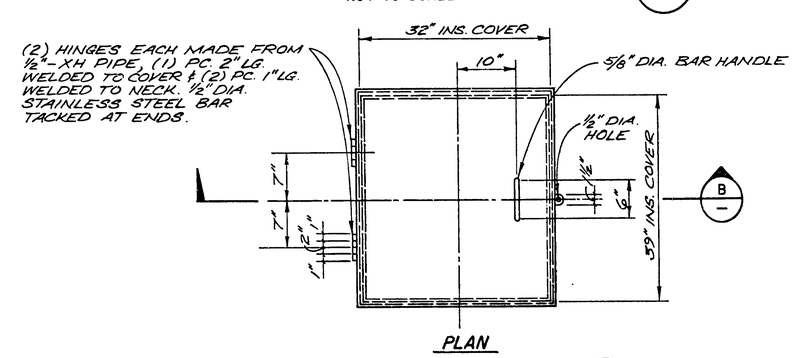

ROOF HATCH DETAIL (2/—)

NOT TO SCALE

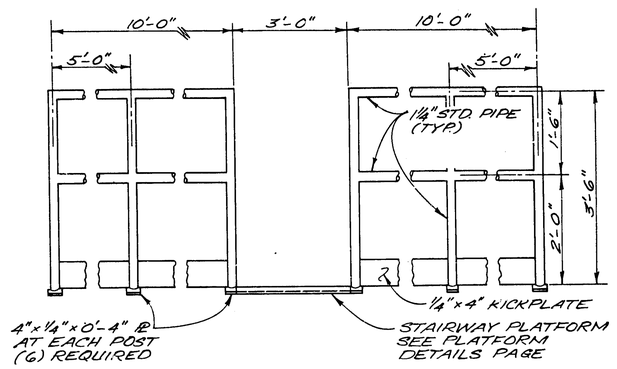

GUARD RAIL DETAIL (5/—)

NOT TO SCALE

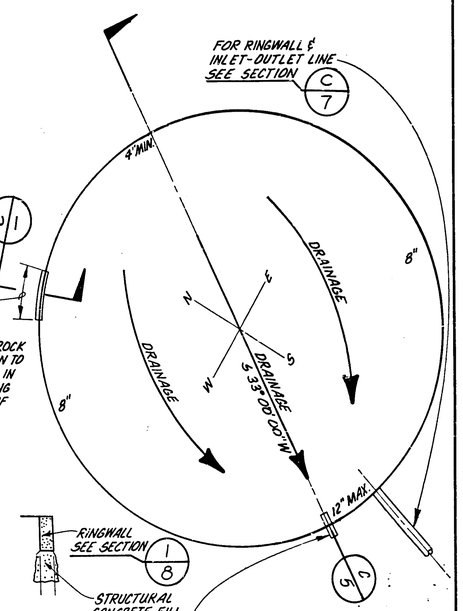

SECTION (C/—)

N.T.S.

4" DIA. CMLSP PIPE THROUGH RINGWALL SEE DETAIL (B/7)

NOTE: NUMBERS IN INCHES INDICATE DEPTH OF CLASS 2 PERMEABLE MATERIAL TO BE PLACED BELOW OILED SAND CUSHION (SEE STD EARTHWORK SPECS.) CLASS 2 MATERIAL SHALL BE PROOF ROLLED TO A HARD UNYIELDING SURFACE. POSITIVE SLOPE IS TO BE MAINTAINED TO DRAIN PIPE.

DRAINAGE PLAN (4/—)

NOT TO SCALE

LOS ALISOS WATER DISTRICT
ORANGE COUNTY, CALIFORNIA

ZONE B 7.8 MG
RECLAIMED WATER RESERVOIR
MISCELLANEOUS DETAILS

REV	DATE	DESCRIPTION	APP.

DESIGN L.G. | DRAWN D.G.B | CHECKED H.U. | DATE AUG. 1986 | F.B.

Boyle Engineering Corporation — consulting engineers / architects

OC-L04-260-12 | D-2309 | SHEET NO. 6 OF 10 SHEETS

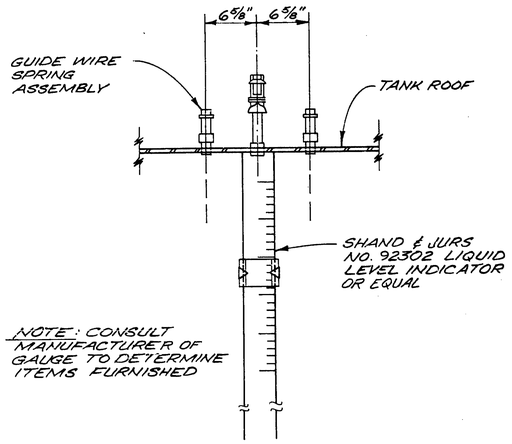

NOTE: CONSULT MANUFACTURER OF GAUGE TO DETERMINE ITEMS FURNISHED

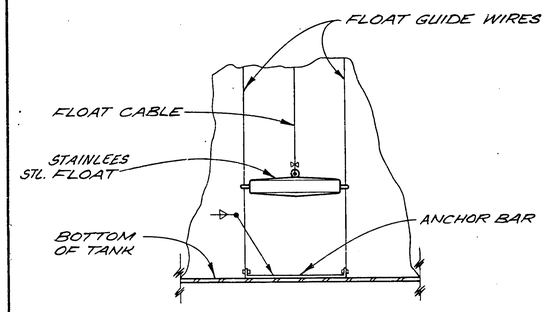

SECTION & ELEVATION

LIQUID LEVEL INDICATOR

DETAIL 1 / —
NOT TO SCALE

NOTE: CAGE TO BE PROVIDED AROUND ENTIRE LENGTH OF SPIRAL STAIRWAY. CAGE IS TO HAVE TIGHT MESH SCREENING AND DOOR WITH PADLOCK AT BOTTOM OF STAIRWAY. CONTRACTOR IS TO SUBMIT SHOP DRAWINGS ON THESE ITEMS AT THE TIME OF SUBMITTING SHOP DRAWINGS FOR FABRICATION OF THE STEEL TANK.

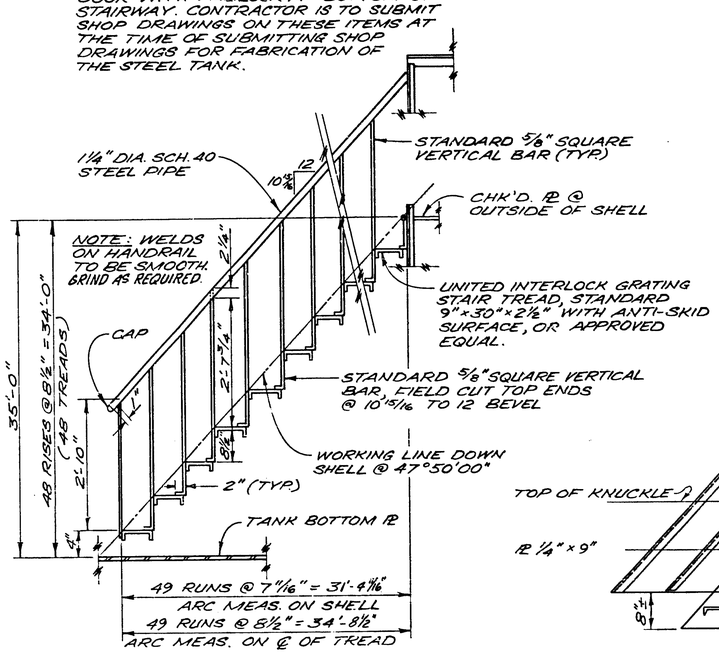

ELEVATION VIEW
N.T.S.

SPIRAL STAIRWAY

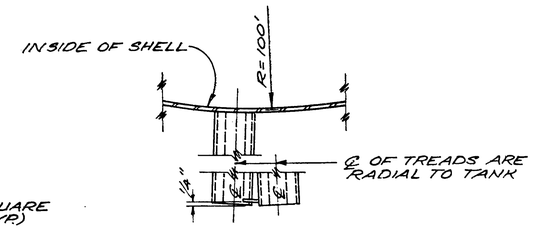

PARTIAL PLAN
N.T.S.

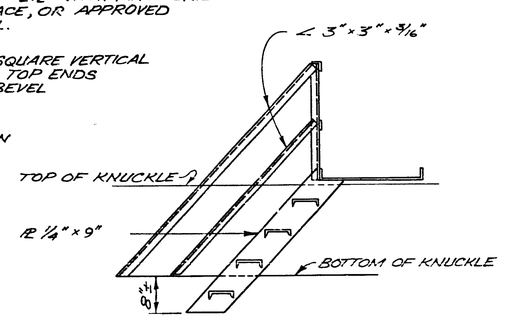

SECTION A / —
N.T.S.

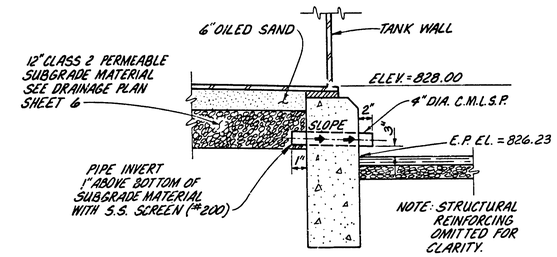

SECTION B / —
N.T.S.

NOTE (1) 12" WIDE SEPERATOR PLATE BETWEEN SKETCH PLATE AND TANK FLOOR PLATE EXTENDING 5' EITHER SIDE OF PIPE.

NOTE: LAP ONLY 5-#8 BARS IN EACH FACE @ ONE LOCATION. LAP LOCATIONS SHALL BE SPACED @ 16'-0" HORIZ. CENTERS. ADJACENT BARS IN ONE FACE SHALL NOT BE SPLICED @ THE SAME LOCATION. BAR LAP SHALL BE 4'-0" MINIMUM.

SEE SPECIFICATIONS FOR SKETCH PLATE TO DETERMINE PIPE LOCATION

1/2" ASPHALT IMPREGNATED EXPANSION JOINT, FILLER AND MASTIC SEALER

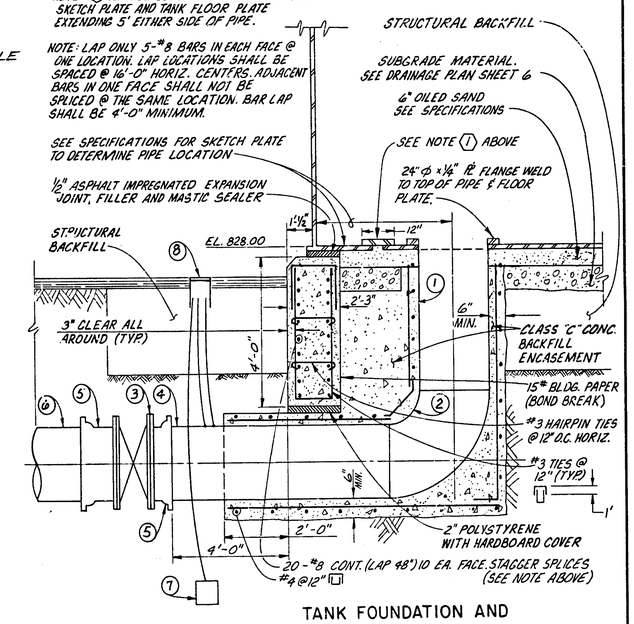

TANK FOUNDATION AND INLET - OUTLET LINE
SECTION C / —
N.T.S.

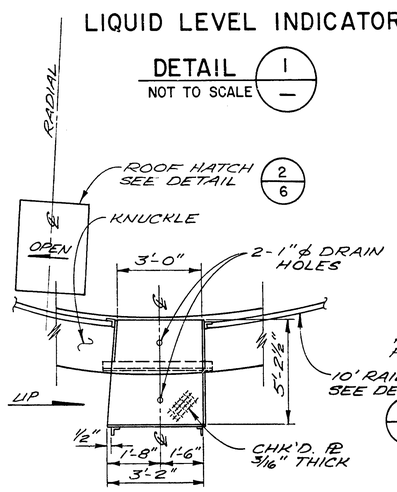

PLAN VIEW
N.T.S.

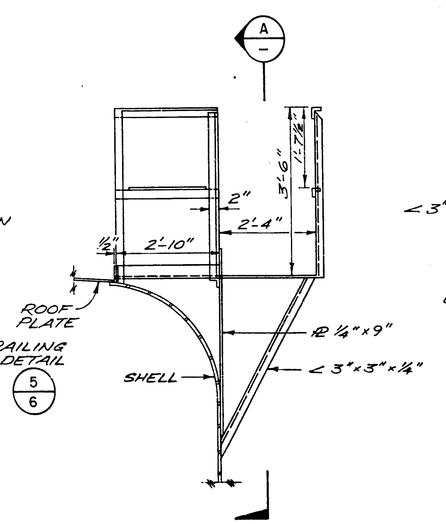

LEFT SIDE VIEW
N.T.S.

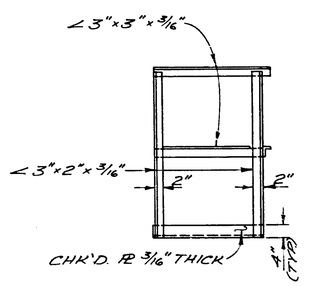

ELEVATION VIEW
N.T.S.

PLATFORM DETAILS

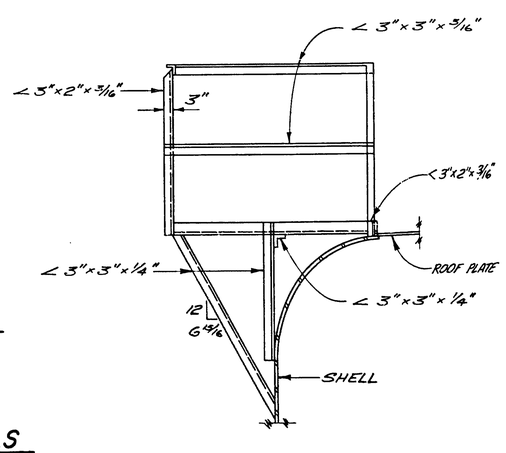

RIGHT SIDE VIEW
N.T.S.

MATERIAL LIST

1. 12" DIA CMLSP (WE x FE)
2. 12" DIA CMLSP-90° BEND
3. 12" CL 150 FLANGED BUTTERFLY VALVE
4. 12" DIA. CMLCSP (WE x PE)
5. 12" DIA. FLANGED COUPLING ADAPTOR
6. 12" DIA. CL. 200 PVC
7. PLACE 50 LB ANODE MINIMUM DISTANCE OF 8 FT. FROM PIPE
8. CP TEST STATION PER LAND STD DWG W-18
9. 12" DIA CMLCSP (WE x PE)
10. 12" FLEXIBLE PIPE COUPLING.

LOS ALISOS WATER DISTRICT
ORANGE COUNTY, CALIFORNIA

ZONE B 7.8 MG
RECLAIMED WATER RESERVOIR
MISCELLANEOUS DETAILS

REV	DATE	DESCRIPTION	APP
1	1-87	ADDENDUM No. 1	H.R.G.

DESIGN L.G. DRAWN D.G.B. CHECKED H.U.

Boyle Engineering Corporation
consulting engineers / architects

DATE AUG. 1986 | OC-L04-260-12 | D-2309

SHEET NO. 7 OF 10 SHEETS

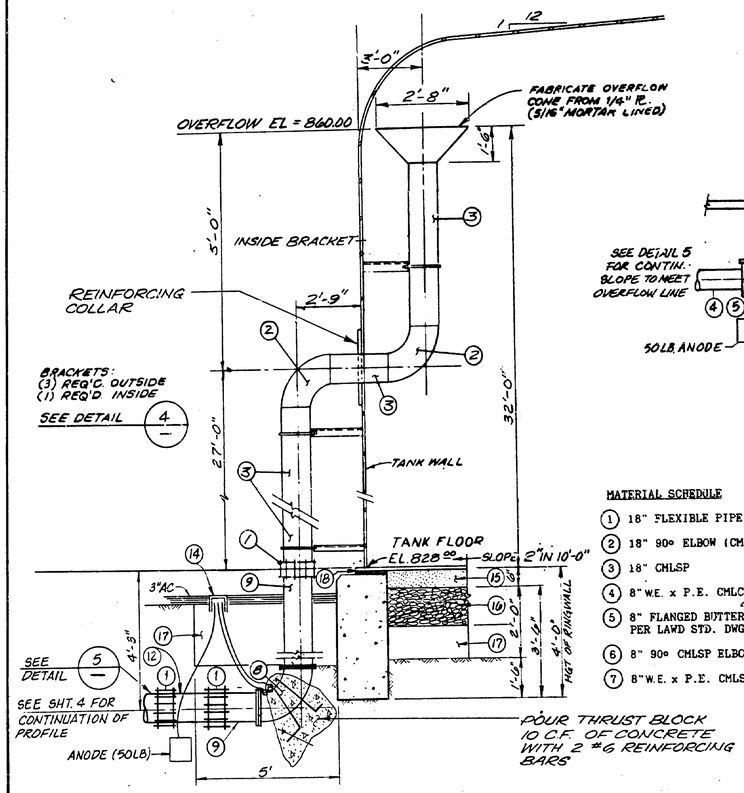

FOUNDATION AND OVERFLOW DETAIL (1)
NOT TO SCALE

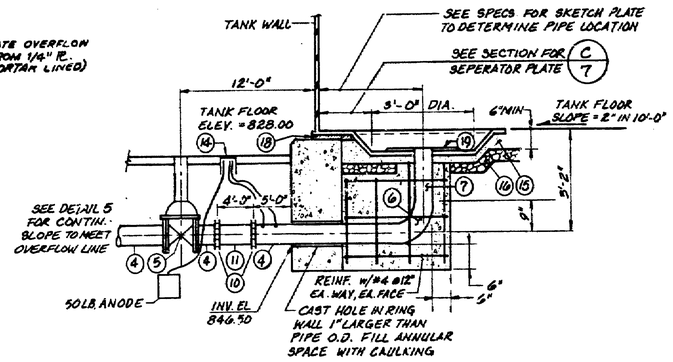

TANK DRAIN DETAIL (2)
NOT TO SCALE

MATERIAL SCHEDULE

1. 18" FLEXIBLE PIPE COUPLING
2. 18" 90° ELBOW (CMLSP)
3. 18" CMLSP
4. 8" W.E. x P.E. CMLCSP
5. 8" FLANGED BUTTERFLY VALVE PER LAWD STD. DWG. W-6 & W-8
6. 8" 90° CMLSP ELBOW
7. 8" W.E. x P.E. CMLSP
8. 18" FLANGED x FLANGED 90° CMLCSP ELBOW.
9. 18" P.E. x F. CMLCSP
10. 8" FLEXIBLE PIPE COUPLING
11. 8" P.E. x P.E. CMLCSP
12. 18" P.E. x P.E., CMLCSP
13. (NOT USED)
14. C.P. TEST STATION PER LAWD STD. DWG. W-18
15. 6" OILED SAND CUSHION
16. SUBBASE MATERIAL SEE DETAIL 4 SHT 6 FOR THICKNESS
17. STRUCTURAL BACKFILL
18. 1/2" ASPHALT IMPREGNATED EXP. JT. FILLER AND MASTIC SEALER
19. 24" x 1/4" PLATE FLG. WELD TO BOTT. & PIPE

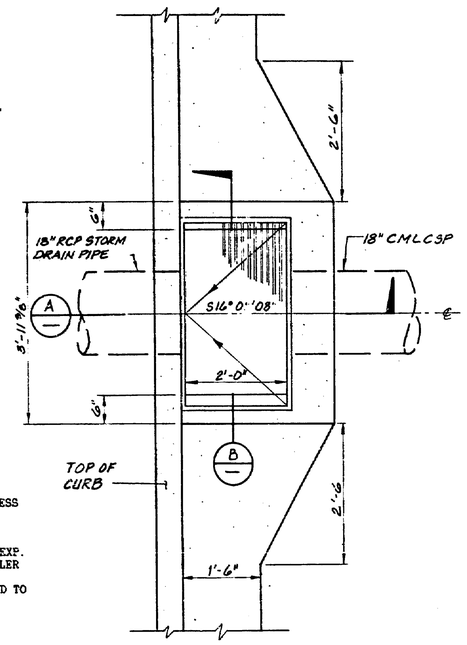

DETAIL (3)
NOT TO SCALE

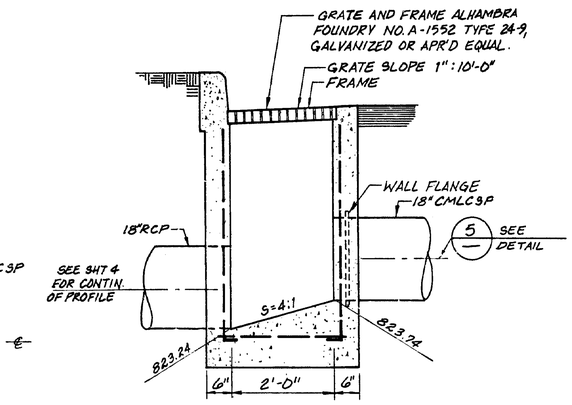

SECTION (A)
NOT TO SCALE

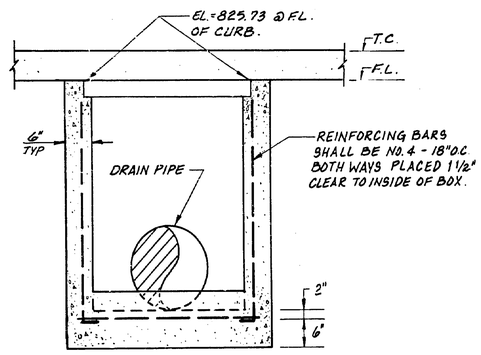

SECTION (B)
NOT TO SCALE

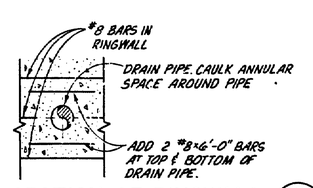

SECTION OF RINGWALL (C)

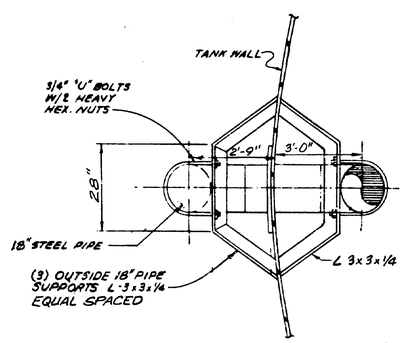

BRACKET DETAIL (4)
NOT TO SCALE

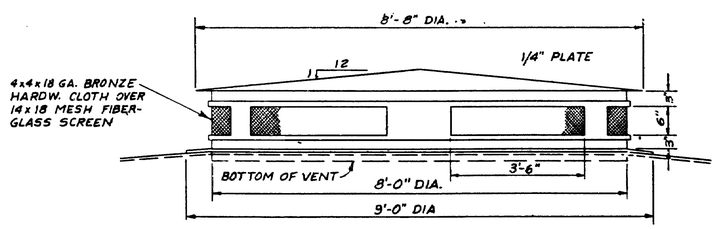

STANDARD ROOF VENT
NOT TO SCALE

NOTE:

1. PROVIDE 6 VENT OPENINGS - EACH 3'-6" x 6" AND EQUALLY SPACED.
2. SCREEN SHALL NOT BE INSTALLED BEFORE TANK PAINTING IS COMPLETE.
3. INSTALL INSULATIVE SLEEVE AND GASKETS IF DISSIMILAR METALS TOUCH. BETWEEN TANK ROOF AND VENT

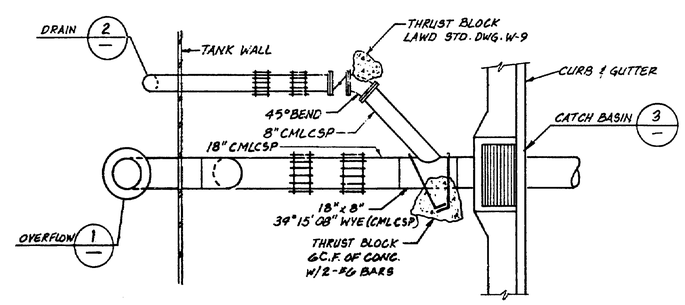

DETAIL (5)
NOT TO SCALE

LOS ALISOS WATER DISTRICT
ORANGE COUNTY, CALIFORNIA

ZONE B 7.8 MG
RECLAIMED WATER RESERVOIR

SECTIONS & DETAILS

REV	DATE	DESCRIPTION	APP
1	1-87	ADDENDUM No. 1	H.R.G.

DESIGN L.G. | DRAWN D.G.B. | CHECKED H.U. | DATE DEC. 1986 | Boyle Engineering Corporation, consulting engineers / architects | OC L04 26012 | D-2309 | SHEET NO. 8 OF 10 SHEETS

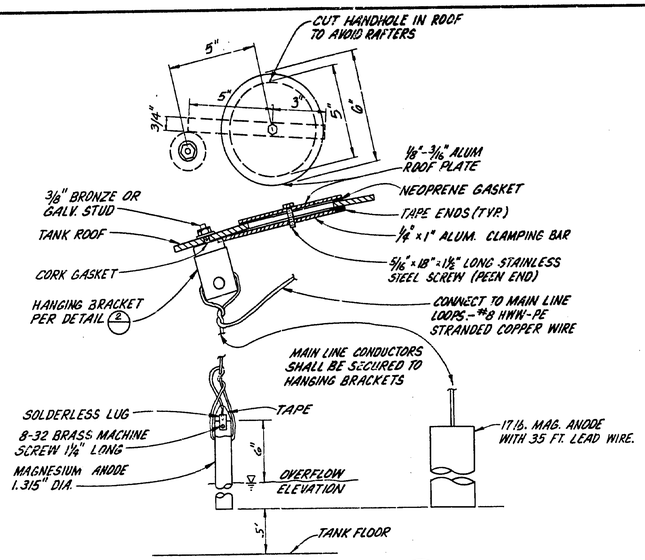

TYPICAL ANODE DETAIL 1
N.T.S.

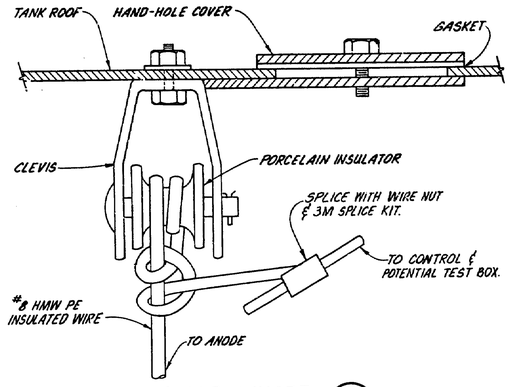

TYPICAL ANODE HANGER 2
SCALE: 1/2" = 1.0'

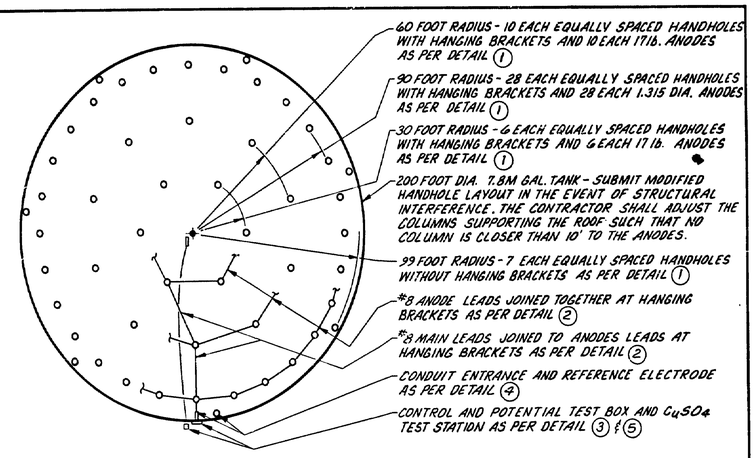

ANODE HANDHOLE AND TEST HOLE
TYPICAL LOCATION VIEW
PLAN VIEW
N.T.S.

TEST BOX MATERIALS LIST

1 10 OHM 225 WATT MINIMUM RHEOSTAT WITH KNOB

2 NEMA 3R BOX WITH HINGED COVER AND LOCK HASP

3 D.C. 0-5 AMPERE METER

4 #18 VINYL INS. WIRE WITH CRIMPED AND SOLDERED CONNECTORS

5 POTENTIAL TEST METER WITH 0-2 VOLT SCALE MARKED "DC VOLTS TO $CuSO_4$ REF"

6 PUSHBUTTON SWITCH SPST-N.O.

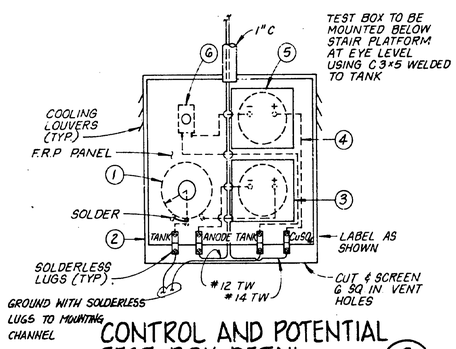

CONTROL AND POTENTIAL TEST BOX DETAIL 3
N.T.S.

T-2

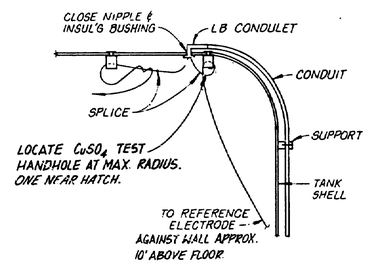

CONDUIT ENTRANCE DETAIL 4
N.T.S.

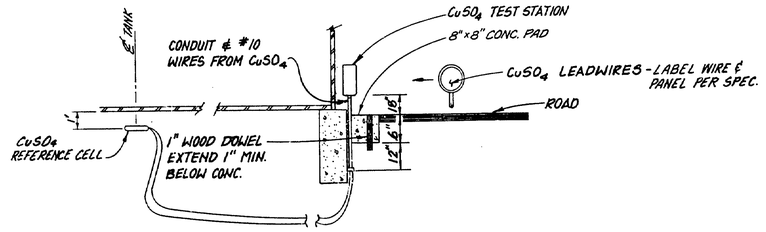

CuSO4 TEST STATION DETAIL 5
N.T.S.

TEST BOX MATERIALS LIST

1 10 OHM 225 WATT MINIMUM RHEOSTAT WITH KNOB

2 NEMA 3R BOX WITH HINGED COVER AND LOCK HASP

3 D.C. 0-5 AMPERE METER

4 #18 VINYL INS. WIRE WITH CRIMPED AND SOLDERED CONNECTORS

5 POTENTIAL TEST METER WITH 0-2 VOLT SCALE MARKED "DC VOLTS TO $CuSO_4$ REF"

6 PUSHBUTTON SWITCH SPST-N.O.

LOS ALISOS WATER DISTRICT
ORANGE COUNTY, CALIFORNIA

ZONE B 7.8 MG
RECLAIMED WATER RESERVOIR
CATHODIC PROTECTION DETAILS

REV	DATE	DESCRIPTION	APR.

DESIGN T.D. | DRAWN D.G.B. | CHECKED H.U. | DATE DEC. 1986 | F.S. | OC L04 260 12 | D-2309

Boyle Engineering Corporation
consulting engineers / architects

SHEET NO. 9 OF 10 SHEETS

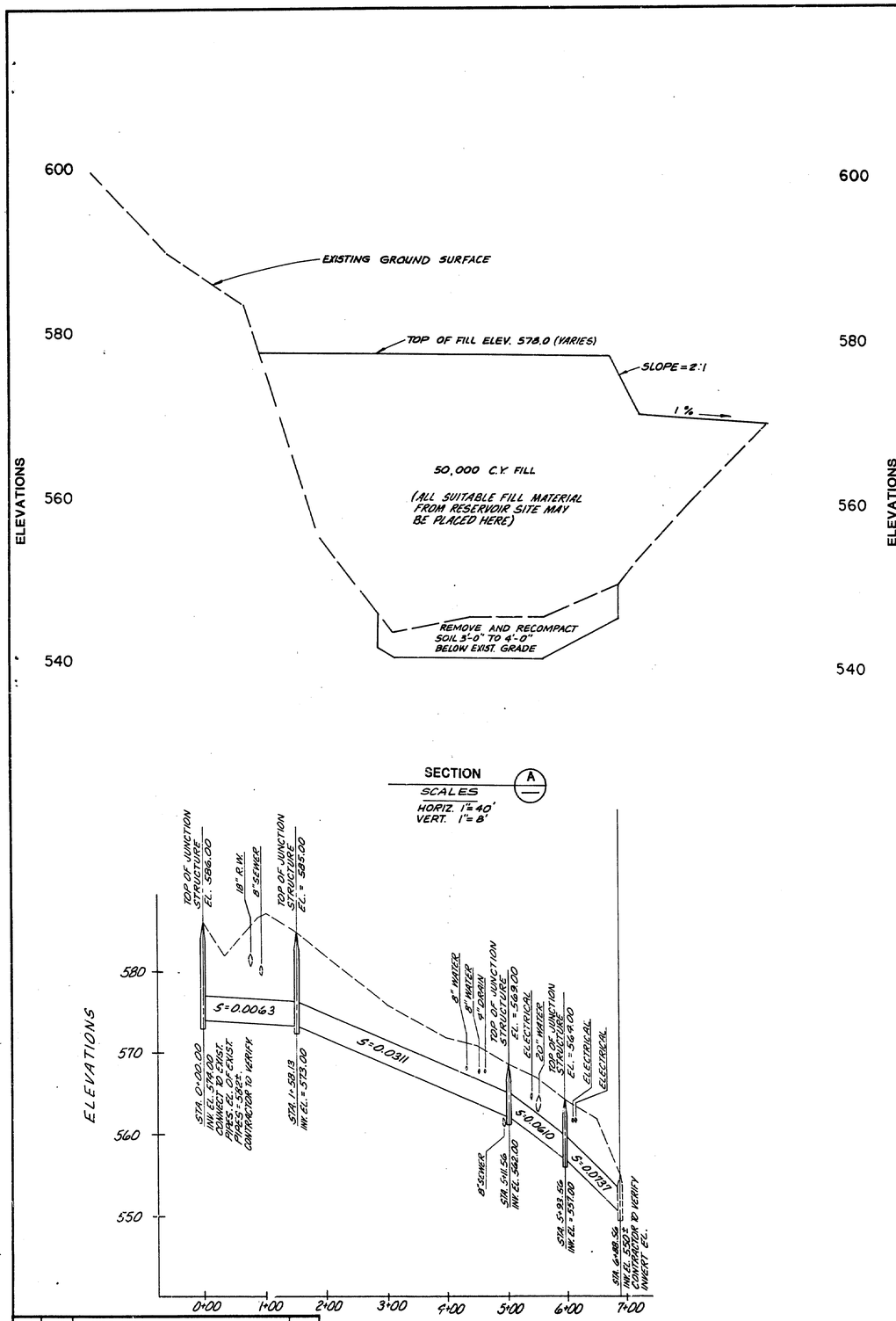

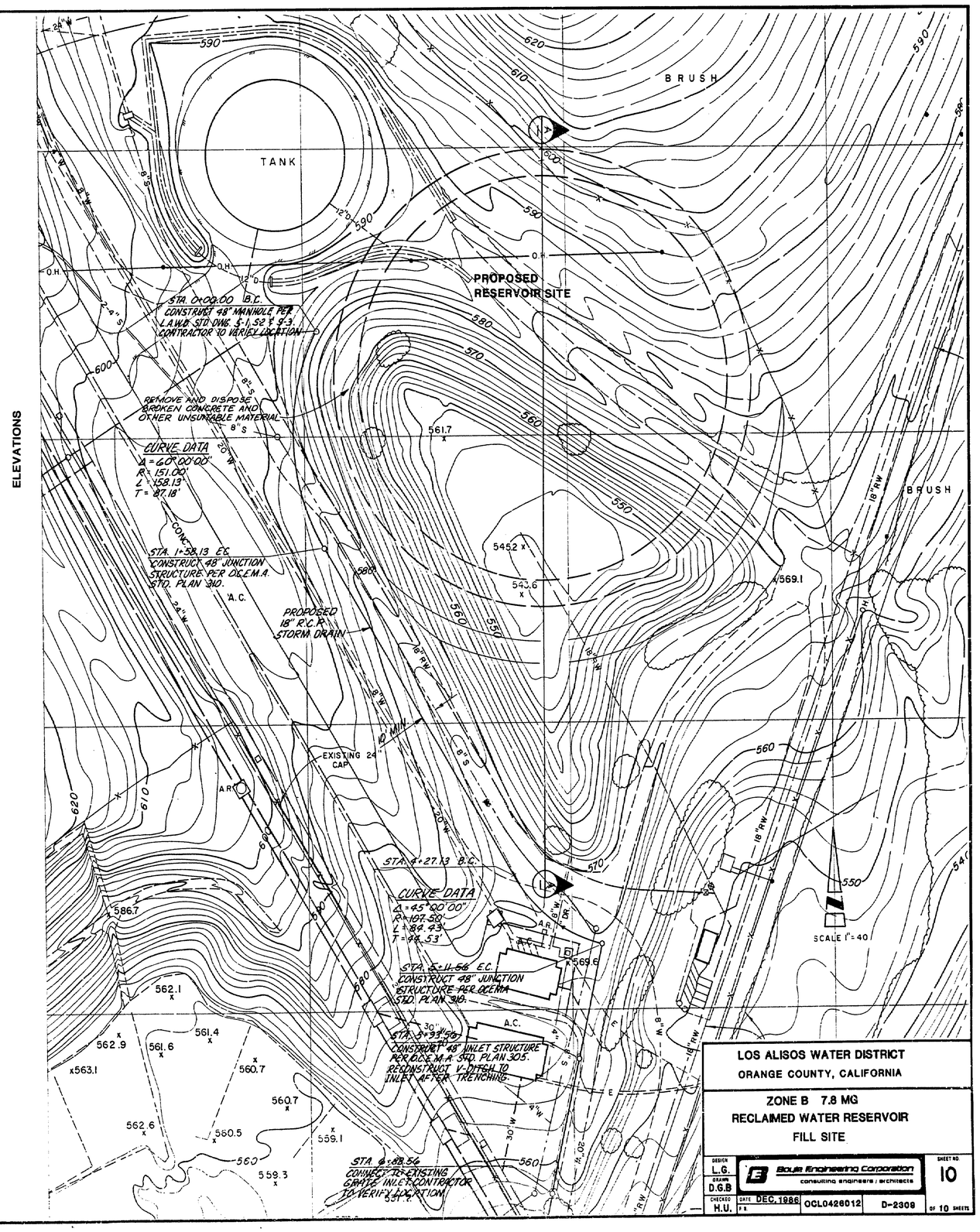

REV	DATE	DESCRIPTION	APP
1	1-87	ADDENDUM No. 1	H.R.G.

LOS ALISOS WATER DISTRICT
ORANGE COUNTY, CALIFORNIA

ZONE B 7.8 MG
RECLAIMED WATER RESERVOIR
FILL SITE

Boyle Engineering Corporation
consulting engineers / architects

DESIGN	DRAWN	CHECKED	DATE	F.B.		SHEET NO.
L.G.	D.G.B	H.U.	DEC. 1986	OCL0426012	D-2309	10 OF 10 SHEETS

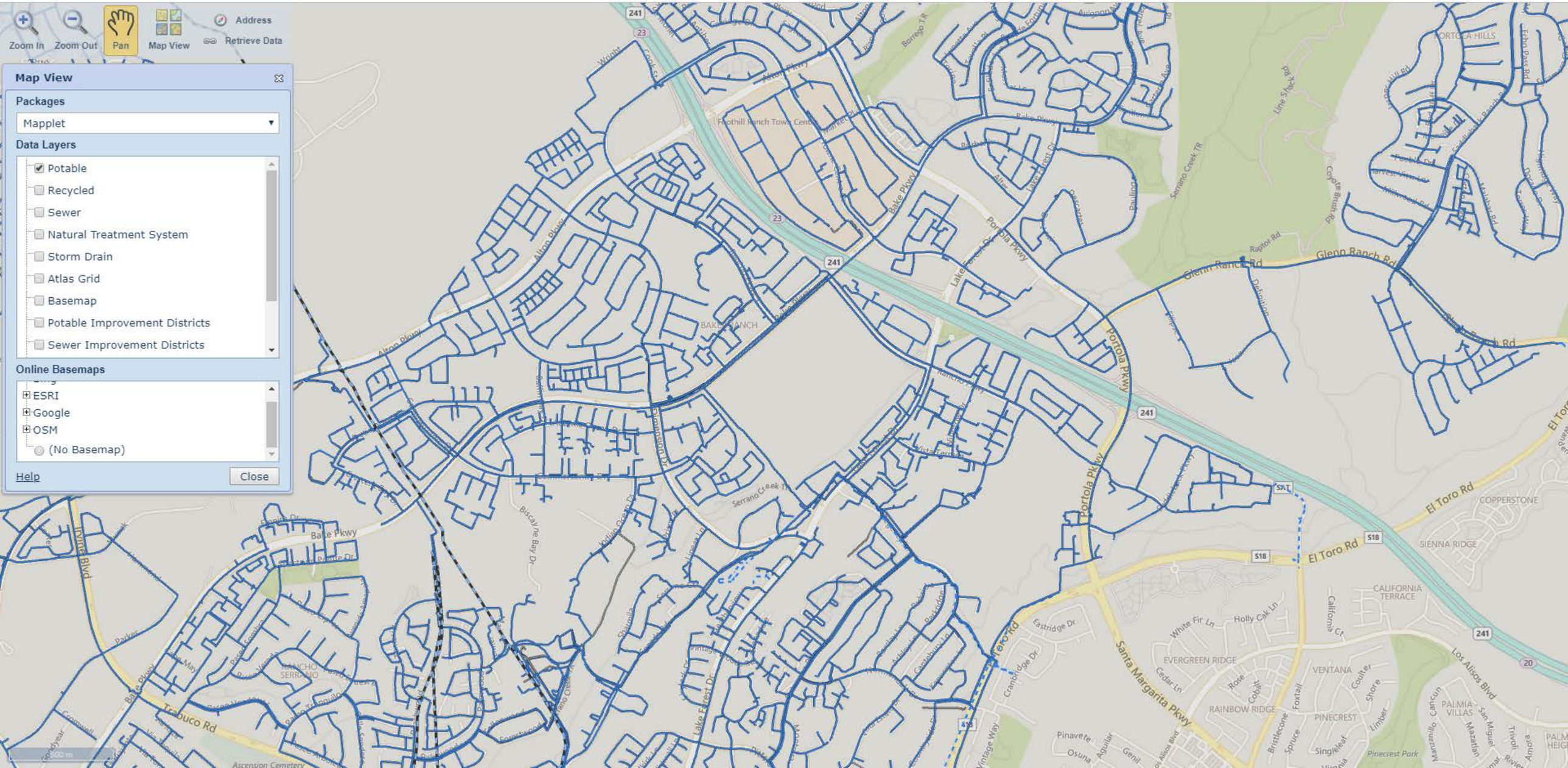
Zoom In
Zoom Out
Pan
Map View
Address
Retrieve Data
Map View
Packages
Mapplet
Data Layers
Potable
Recycled
Sewer
Natural Treatment System
Storm Drain
Atlas Grid
Basemap
Potable Improvement Districts
Sewer Improvement Districts
Online Basemaps
ESRI
Google
OSM
(No Basemap)
Help
Close
Portola Pkwy
Glenn Ranch Rd
El Toro Rd
Santa Margarita Pkwy
Los Alisos Blvd
Trabuco Rd
Bake Pkwy
Serrano Creek
Lake Forest Dr
Biscayne Bay Dr
Alton Pkwy
Foothill Ranch Town Center
BAKE RANCH
RANCHO SERRANO
Ascension Cemetery
PORTOLA HILLS
COPPERSTONE
SIENNA RIDGE
CALIFORNIA TERRACE
EVERGREEN RIDGE
VENTANA
RAINBOW RIDGE
PINECREST
PALMIA VILLAS
Pinecrest Park
241
23
20
S18

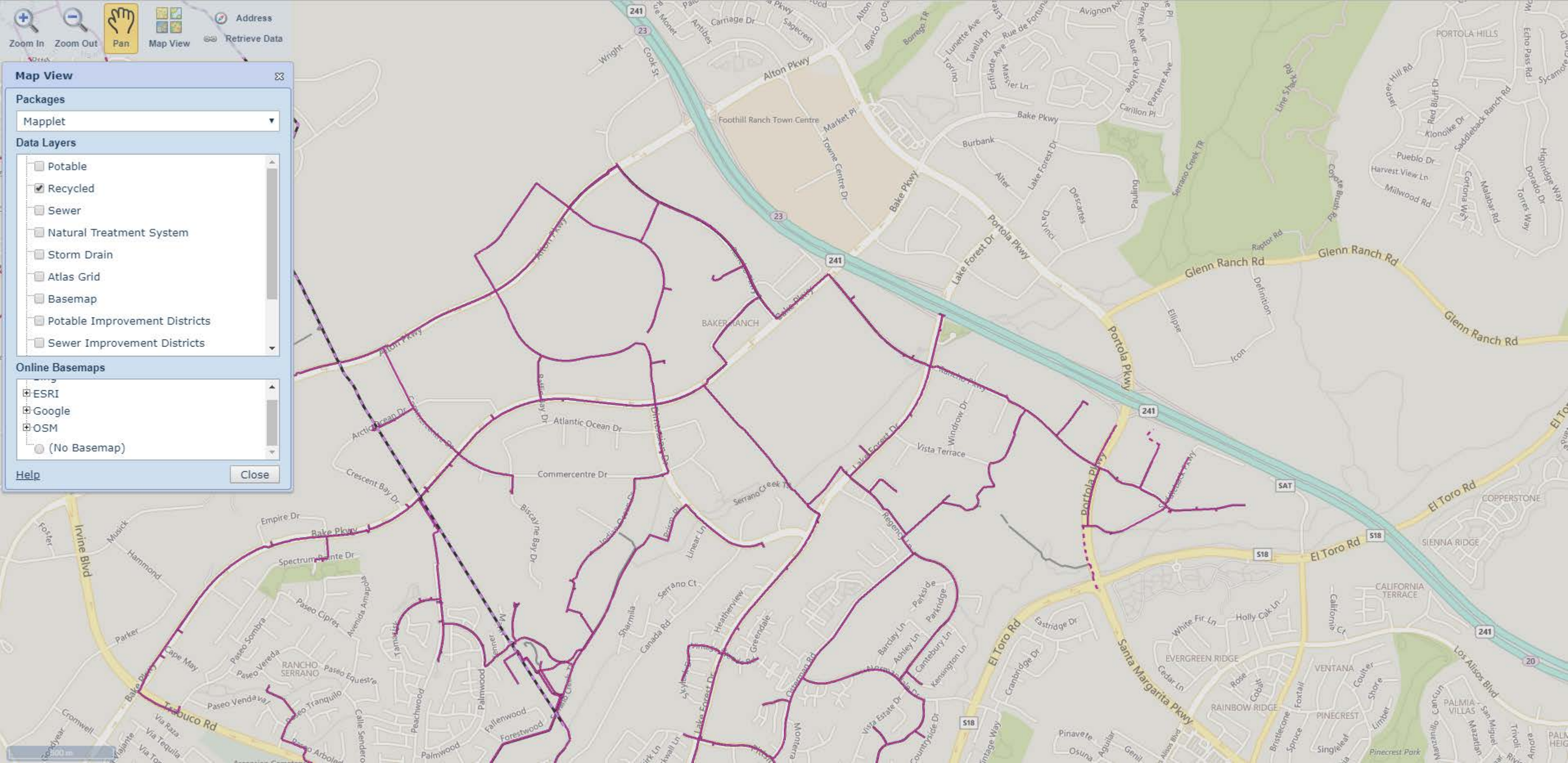
Zoom In
Zoom Out
Pan
Map View
Address
Retrieve Data
Map View
Packages
Mapplet
Data Layers
Potable
Recycled
Sewer
Natural Treatment System
Storm Drain
Atlas Grid
Basemap
Potable Improvement Districts
Sewer Improvement Districts
Online Basemaps
ESRI
Google
OSM
(No Basemap)
Help
Close
Alton Pkwy
Foothill Ranch Town Centre
Bake Pkwy
Portola Pkwy
Lake Forest Dr
Glenn Ranch Rd
El Toro Rd
Santa Margarita Pkwy
Los Alisos Blvd
Irvine Blvd
Trabuco Rd
Atlantic Ocean Dr
Commercentre Dr
Serrano Creek TR
Vista Terrace
BAKER RANCH
PORTOLA HILLS
COPPERSTONE
SIENNA RIDGE
CALIFORNIA TERRACE
EVERGREEN RIDGE
VENTANA
RAINBOW RIDGE
PINECREST
RANCHO SERRANO
PALMIA - VILLAS
Pinecrest Park
241
23
SAT
S18
20

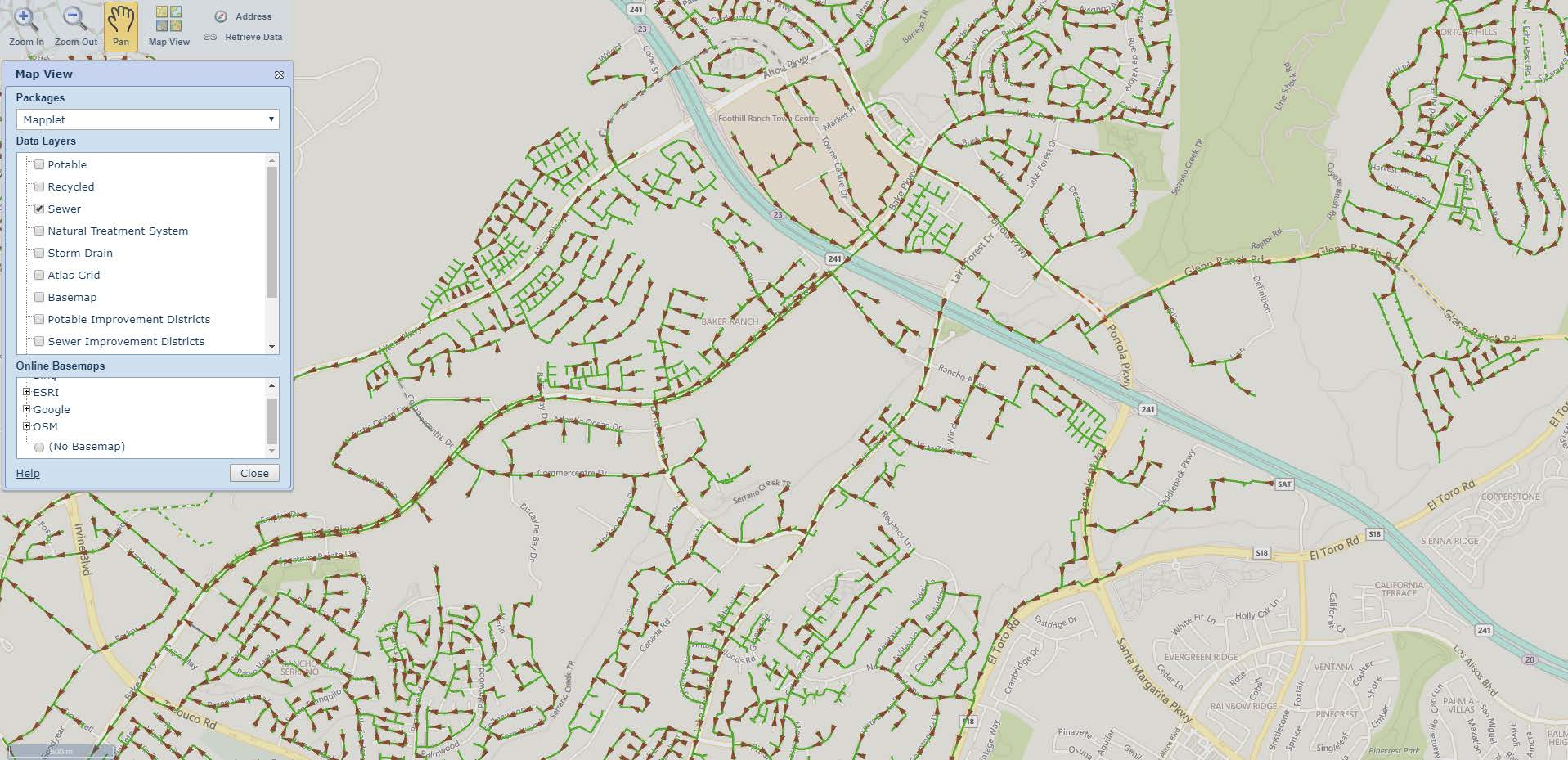
Zoom In
Zoom Out
Pan
Map View
Address
Retrieve Data
Map View
Packages
Mapplet
Data Layers
Potable
Recycled
Sewer
Natural Treatment System
Storm Drain
Atlas Grid
Basemap
Potable Improvement Districts
Sewer Improvement Districts
Online Basemaps
ESRI
Google
OSM
(No Basemap)
Help
Close
Foothill Ranch Towne Centre
BAKER RANCH
Alton Pkwy
Glenn Ranch Rd
Portola Pkwy
Lake Forest Dr
Rancho Pkwy
Commercentre Dr
Serrano Creek TR
El Toro Rd
Santa Margarita Pkwy
Trabuco Rd
Irvine Blvd
Saddleback Pkwy
COPPERSTONE
SIENNA RIDGE
CALIFORNIA TERRACE
EVERGREEN RIDGE
RAINBOW RIDGE
VENTANA
PINECREST
PALMIA VILLAS
RANCHO SERRANO
Los Alisos Blvd
241
23
S18
SAT
20

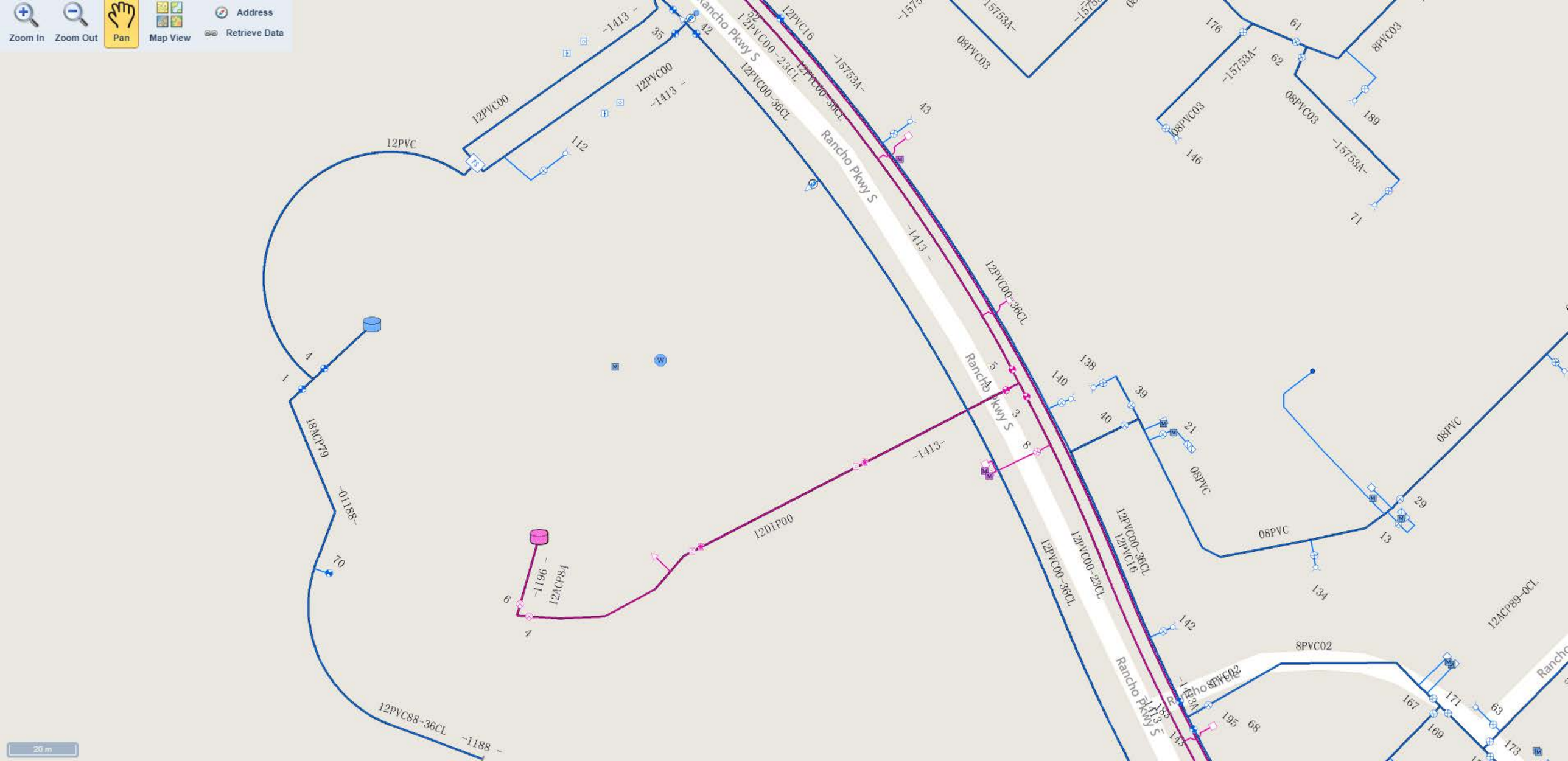
Zoom In
Zoom Out
Pan
Map View
Address
Retrieve Data
Rancho Pkwy S
12PVC00
12PVC
12PVC00-23CL
12PVC00-36CL
12PVC16
-1413-
-15753A-
08PVC03
8PVC03
12DIP00
12ACP84
-1196-
18ACP79
-01188-
12PVC88-36CL
-1188-
08PVC
8PVC02
12ACP89-0CL
20 m

From: Eric Akiyoshi
To: Danielle Clendening
Subject: RE: Fwd: Pipeline Information Request for Proposed School Site in Lake Forest, CA
Date: Monday, March 11, 2019 3:55:21 PM

Danielle

Thank you for checking back. Here are some thoughts on the remaining questions.

Leak History - IRWD has owned and operating these tanks since January 2001. Neither the Lake Forest Zone "II" West, nor the Zone "B" West tanks have had any leaks during this time frame. Additionally, IRWD is not aware of any leaks prior to taking responsibility for the tanks.
Inspection Frequency - IRWD inspects its facilities on a weekly basis and monitors continuously with automated data acquisition. Tanks are typically inspected via underwater camera and SCUBA inspections approximately every 2 years.
Is there a seismic shutoff valve - IRWD has automated data acquisition and manual isolation valves for each of these tanks.

Regards

Eric Akiyoshi, P.E.
Principal Engineer
Planning and Technical Services
Irvine Ranch Water District
15600 Sand Canyon Avenue, Irvine, California 92618
Mailing: PO Box 57000, Irvine, California 92619-7000
(949) 453-5552 office (714) 222-5149 cell
Email: akiyoshi@irwd.com

>>> Danielle Clendening <dbclendening@placeworks.com> 10:53 AM 3/11/2019 >>>
Hi Eric,

Is there any update about questions 6-9 regarding the two water tanks?

Thank you for your assistance,

Danielle

From: Eric Akiyoshi <AKIYOSHI@irwd.com>
Sent: Tuesday, January 29, 2019 11:35 AM
To: Danielle Clendening <dbclendening@placeworks.com>
Subject: Re: Fwd: Pipeline Information Request for Proposed School Site in Lake Forest, CA

Danielle

Thank you for your e-mail. With regards to your facilities request. You can do the research on IRWD's online GIS Map and Records tool located here:
https://www.irwd.com/doing-business/gis-map-and-records

Regarding the two tanks you identified, items 1-6 have been filled in. Items 6-9 will need to be researched and we anticipate getting back to you within 5-7 business days.

Lake Forest Zone "II" West Reservoir
Tank Capacity: 7.8 million gallons
ID: Lake Forest Zone "II" West Reservoir

Height: approximately 35 ft
Material: Steel
Year of Construction: 1978
Water Level of the Tank: High Water Level = 883 ft

Lake Forest Zone "B" West Reservoir
Tank Capacity: 7.8 million gallons
ID: Lake Forest Zone "B" West Reservoir
Height: approximately 35 ft
Material: Steel
Year of Construction: 1984
Water Level of the Tank: High Water Level = 867 ft

If you have questions, feel free to contact me.

Eric Akiyoshi, P.E.
Principal Engineer
Planning and Technical Services
Irvine Ranch Water District
15600 Sand Canyon Avenue, Irvine, California 92618
Mailing: PO Box 57000, Irvine, California 92619-7000
(949) 453-5552 office (714) 222-5149 cell
Email: akiyoshi@irwd.com

>>> Danielle Clendening <dbclendening@placeworks.com> 1/28/2019 3:36 PM >>>
Good afternoon,

Saddleback Valley Unified School District, in compliance with CCR Title V Section 14010 (h), has contracted the services of PlaceWorks to conduct a safety hazard assessment related to water pipelines that are 12-inches in diameter or greater and pressurized sewer lines located within a 1,500-foot radius of a proposed elementary school site in Lake Forest, Orange County, CA. The proposed school site is located in the northeast corner of the intersection of Bake Parkway and Rancho Parkway. I have attached a pdf of a map showing the exact location of the site outlined in yellow and an approximately 1,500-foot radius marked around the site in red.

This email is requesting information about any water pipelines 12-inches in diameter or greater and any pressurized sewer pipelines operated by Irvine Ranch Water District located within a 1,500-foot radius of the site. If there are no water or sewer lines that meet those specifications within the radius of the site, could I get a response stating such for the school district's safety hazard report.

Additionally, there appear to be two aboveground water storage tanks within 1,500 feet of the proposed school site. For the purposes of the District's safety hazard assessment we require the following information for each tank:

1. Tank Capacity:
2. ID:
3. Height:
4. Material:

5. Year of Construction:
6. Water Level of the Tank:
7. Leak History:
8. Inspection Frequency:
9. Is there a seismic shutoff valve:

If this not the correct email to be sending such a request, could you please help direct this inquiry to the proper division.

Thank you so much for your help, please contact me if you have any questions or need more information!

DANIELLE CLENDENING
Intern

PLACEWORKS <!--[if !vml]--><!--[endif]-->

2850 Inland Empire Boulevard, Suite B | Ontario, California 91764
909.989.4449 | dbclendening@placeworks.com | placeworks.com

Mike Campisi
Pipeline Planning Assistant

9400 Oakdale Ave
Chatsworth, CA 91311

Tel: 213-231-6081

February 27, 2019

Danielle Clendening
PLACEWORKS
2850 Inland Empire Boulevard, Suite B
Ontario, California 91764
dbclendening@placeworks.com

Subject: **Bake Parkway and Rancho Parkway**
Lake Forest,CA

DCF: **0241-19NC193**

The Transmission Department of SoCalGas does not operate any facilities within 1500 feet of the address stated above. However, the Distribution Department of SoCalGas may maintain and operate facilities within that location.

To assure no conflict with the Distribution's pipeline system, please e-mail them at:

AtlasRequests/WillServeAnaheim@semprautilities.com

Sincerely,

Mike Campisi
Pipeline Planning Assistant
SoCalGas Transmission Technical Services
SoCalGasTransmissionUtilityRequest@semprautilities.com

Gas Transmission Pipeline Interactive Map - Orange

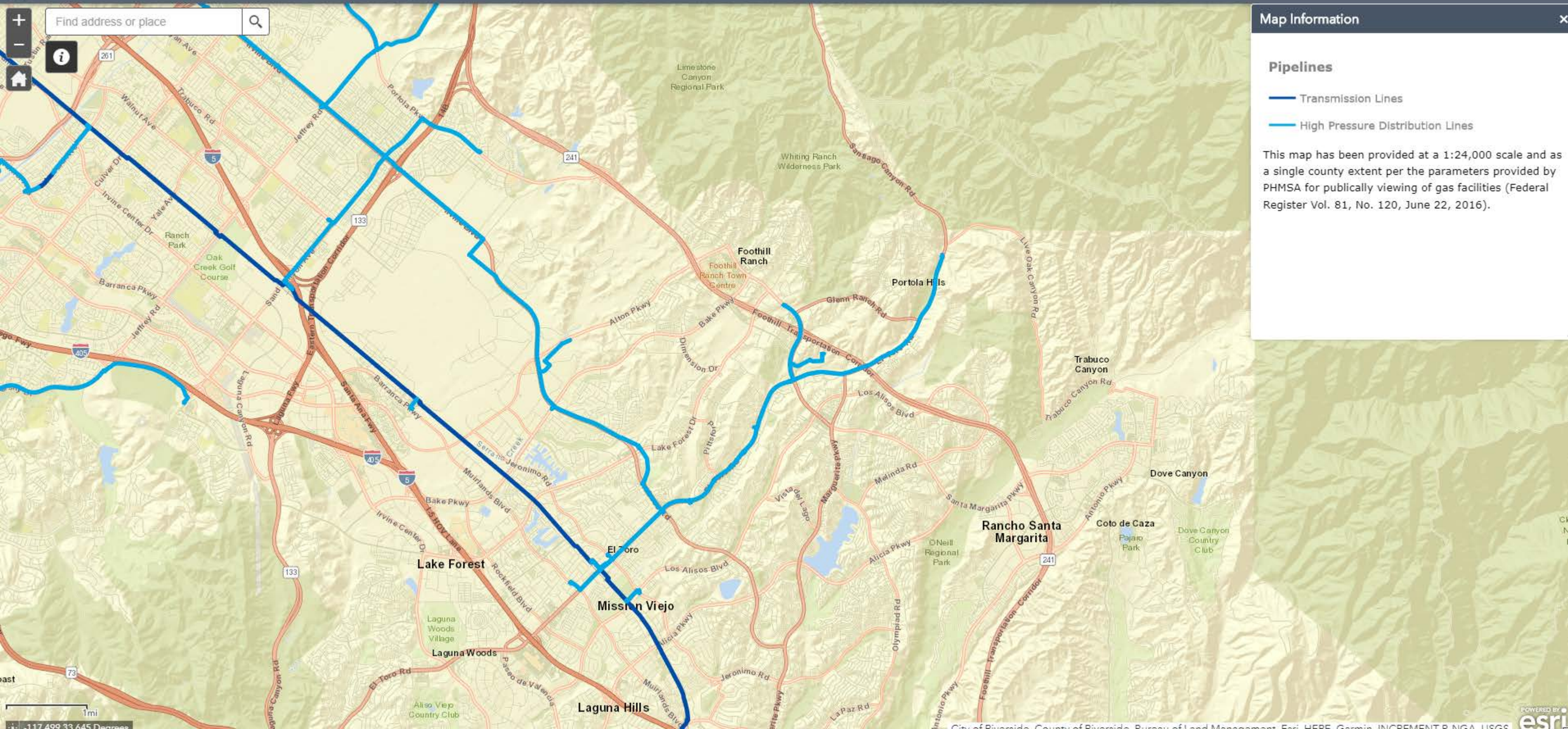

SOUTHERN CALIFORNIA EDISON
An EDISON INTERNATIONAL℠ Company

Phil Hung, P.E.
EMF Program Manager
6040 N. Irwindale Ave
Irwindale CA 91702
Phone: (626) 633-3415
E-mail: phil.hung@sce.com

SCE Voltage Identification Report of Proposed or Existing School Site

Request Received: **01/28/2019** Received By: **Phil Hung**

Requesting Entity: __ School ____District __**X**__Consultant ___ School Representative:

Danielle Clendening
dbclendening@placeworks.com
The Planning Center
2850 Inland Empire Boulevard, Suite B
Ontario, California 91764
(909) 989-4449

Nature of Request: Voltage ID ___**X**___ Msmt. Req. _____ Information _____

Other: _____

Site Name:	**Lake Forest Bake Parkway/Rancho Parkway**
Site Address:	**A parcel on the south-west corner of Bake Parkway and Rancho Parkway**
City:	**Lake Forest, CA 92610**
County:	**Orange**
Cross Streets:	**Bake Parkway/Rancho Parkway**

Client: **Saddleback Valley Unified School District**
25631 Peter A. Hartman Way
Mission Viejo, CA 92691

Photo(s):

Aerial View

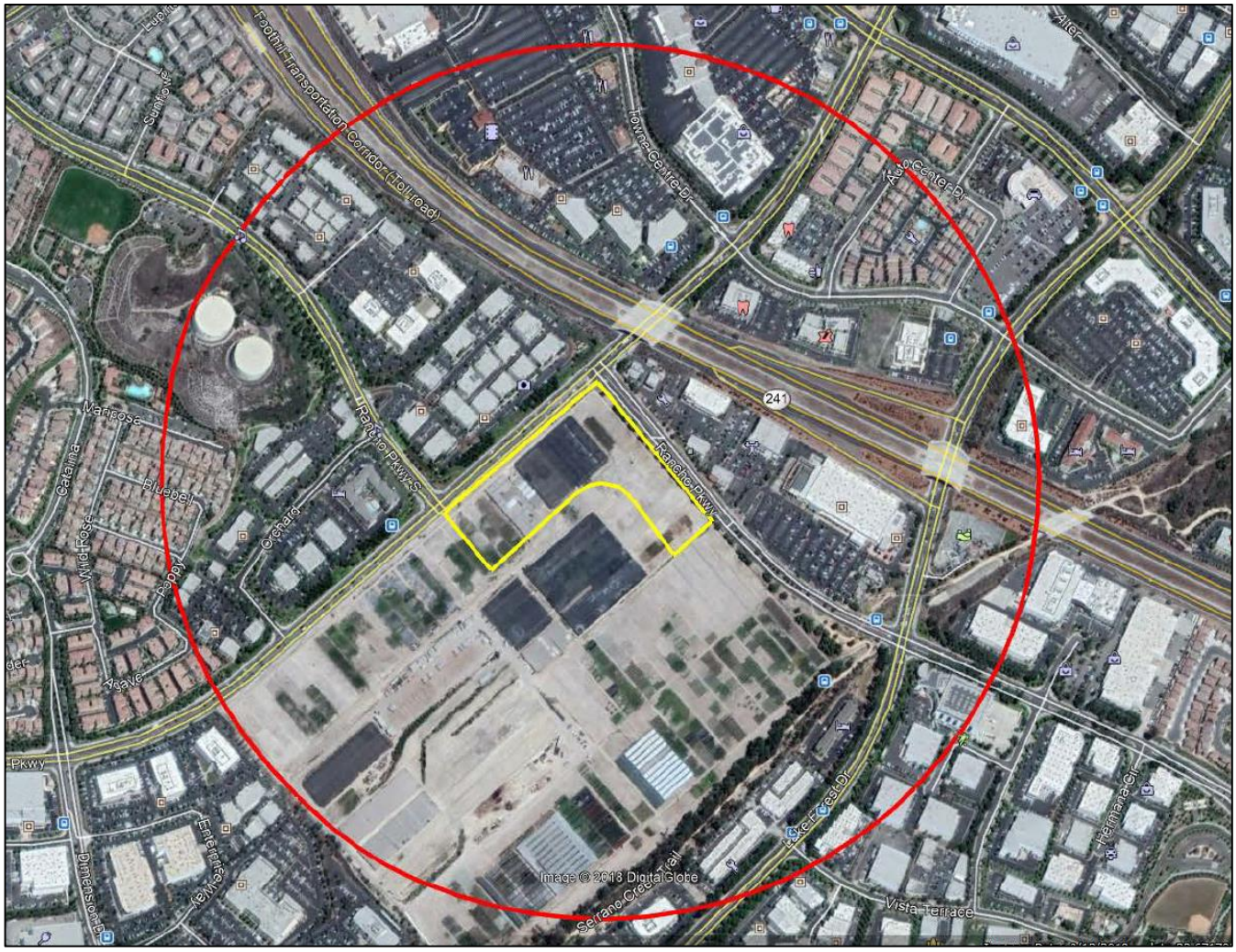

Street View

Looking Northeast on Bake Parkway

Date of Site Visit: **01/29/2019 (Bing Maps)**
Support Action(s) Taken: **SCE system database lookup**

SCE Facilities Identified Within California Code of Regulations (CCR) Title 5 Prescribed Distances:

- **There are 66 kV double circuits on Bake Parkway immediately adjacent to the proposed site.**
- **There are no new power lines above 50 kV in the area since the previous voltage identification report of 2017**
- **The area adjacent to Bake Parkway should be designated as non-populated area such as parking lot or storage area in order to meet the Title 5 setback requirement.**

Date(s) responded to Requestor:
01/29/19: Acknowledged, (E-mail)
01/29/19: Supplied Information (E-mail)